Dist	COUNTY	ROUTE	POST MILES TOTAL PROJECT	SHEET No.	TOTAL SHEETS
06	Ker	178	100.6/102.7	1	54

ACHSNHP-P178(065)E

STATE OF CALIFORNIA
DEPARTMENT OF TRANSPORTATION

PROJECT PLANS FOR CONSTRUCTION ON
STATE HIGHWAY

IN KERN COUNTY IN RIDGECREST FROM INYOKERN ROAD TO GEMSTONE STREET

TO BE SUPPLEMENTED BY STANDARD PLANS DATED 2010

INDEX OF PLANS

SHEET No.	DESCRIPTION
1	TITLE AND LOCATION MAP
2	TYPICAL CROSS SECTIONS
3-19	CONSTRUCTION DETAILS
20-27	UTILITY PLANS
28	CONSTRUCTION AREA SIGNS
29	STAGE CONSTRUCTION PLANS
30-35	PAVEMENT DELINEATION AND SIGN PLANS AND QUANTITIES
36-38	SIGN DETAILS AND QUANTITIES
39-40	SUMMARY OF QUANTITIES
41-43	ELECTRICAL PLANS
44-54	REVISED STANDARD PLANS

THE STANDARD PLANS LIST APPLICABLE TO THIS CONTRACT IS INCLUDED IN THE NOTICE TO BIDDERS AND SPECIAL PROVISIONS BOOK.

LOCATION MAP

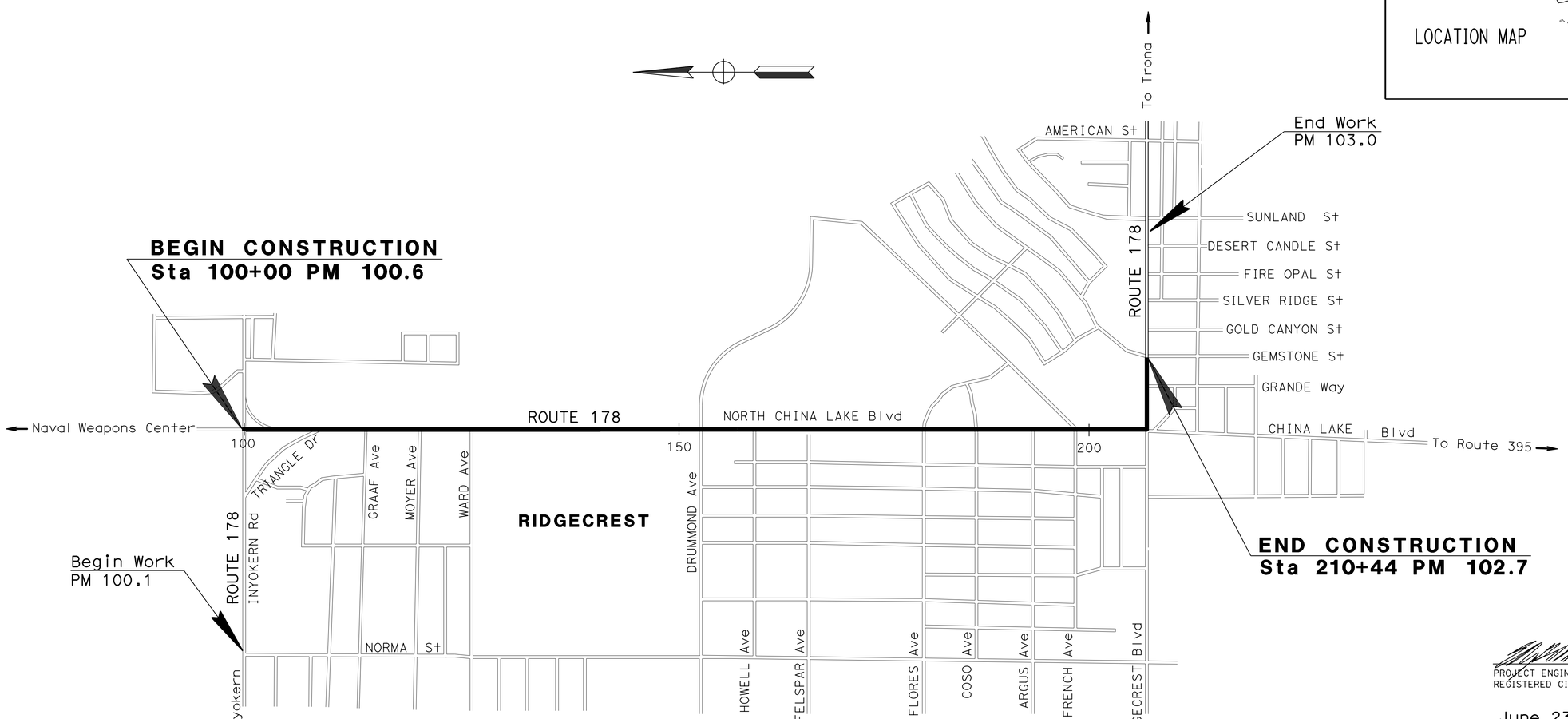

NO SCALE

THE CONTRACTOR SHALL POSSESS THE CLASS (OR CLASSES) OF LICENSE AS SPECIFIED IN THE "NOTICE TO BIDDERS."

PROJECT MANAGER MEHRAN AKHAVAN

DESIGN ENGINEER ARTHUR RAMIREZ

PROJECT ENGINEER REGISTERED CIVIL ENGINEER — DATE 02-25-14

REGISTERED PROFESSIONAL ENGINEER ELLERY B. ELLIS No. 62592 Exp. 6-30-16 CIVIL STATE OF CALIFORNIA

June 23, 2014
PLANS APPROVAL DATE

THE STATE OF CALIFORNIA OR ITS OFFICERS OR AGENTS SHALL NOT BE RESPONSIBLE FOR THE ACCURACY OR COMPLETENESS OF SCANNED COPIES OF THIS PLAN SHEET.

CONTRACT No.	06-0P8104
PROJECT ID	0612000243

LAST REVISION 05-23-14 DATE PLOTTED => 20-AUG-2014 TIME PLOTTED => 10:44

Dist	COUNTY	ROUTE	POST MILES TOTAL PROJECT	SHEET No.	TOTAL SHEETS
06	Ker	178	100.6/102.7	2	54

REGISTERED CIVIL ENGINEER 02-25-14 DATE

6-23-14
PLANS APPROVAL DATE

REGISTERED PROFESSIONAL ENGINEER ELLERY B. ELLIS No. 62592 Exp. 6-30-16 CIVIL STATE OF CALIFORNIA

THE STATE OF CALIFORNIA OR ITS OFFICERS OR AGENTS SHALL NOT BE RESPONSIBLE FOR THE ACCURACY OR COMPLETENESS OF SCANNED COPIES OF THIS PLAN SHEET.

NOTES:

1. DIMENSIONS OF THE PAVEMENT (STRUCTURAL SECTIONS) ARE SUBJECT TO TOLERANCES SPECIFIED IN THE STANDARD SPECIFICATIONS.
2. SUPERELEVATION AS SHOWN OR AS DIRECTED BY ENGINEER.
3. CROSS SLOPES VARY FROM 2% TO -2% AT LEFT TURN CONFORMS TO INTERSECTIONS.
4. FOR LEFT TURN LOCATIONS SEE CONSTRUCTION DETAIL SHEETS.
5. FOR COLD PLANE LOCATIONS SEE CONSTRUCTION DETAILS.

(*) SEE CONSTRUCTION DETAIL SHEETS FOR MINOR CONCRETE (TEXTURE PAVING) & PRECAST CONCRETE PAVER LOCATIONS.

DESIGN DESIGNATION

ADT (2011)	20,350	D	52.4%
ADT (2035)	22,990	T	35%
DHV	2,235	V	40 mph
		TI_{20}	10

PAVEMENT CLIMATE REGION: SOUTH MOUNTAIN

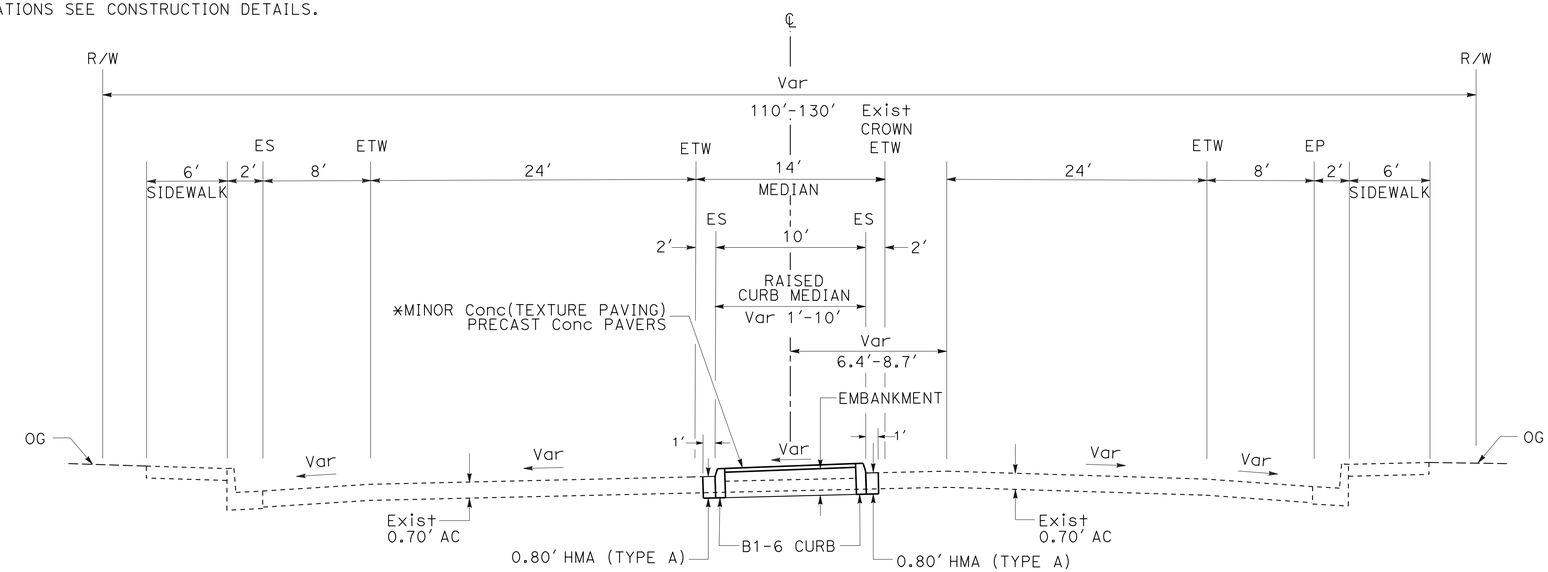

ROUTE 178

Sta 206+58 TO Sta 212+38, E RIDGECREST Blvd TO GEMSTONE St
Sta 103+42 TO Sta 152+40, INYOKERN Rd TO DRUMMOND Ave

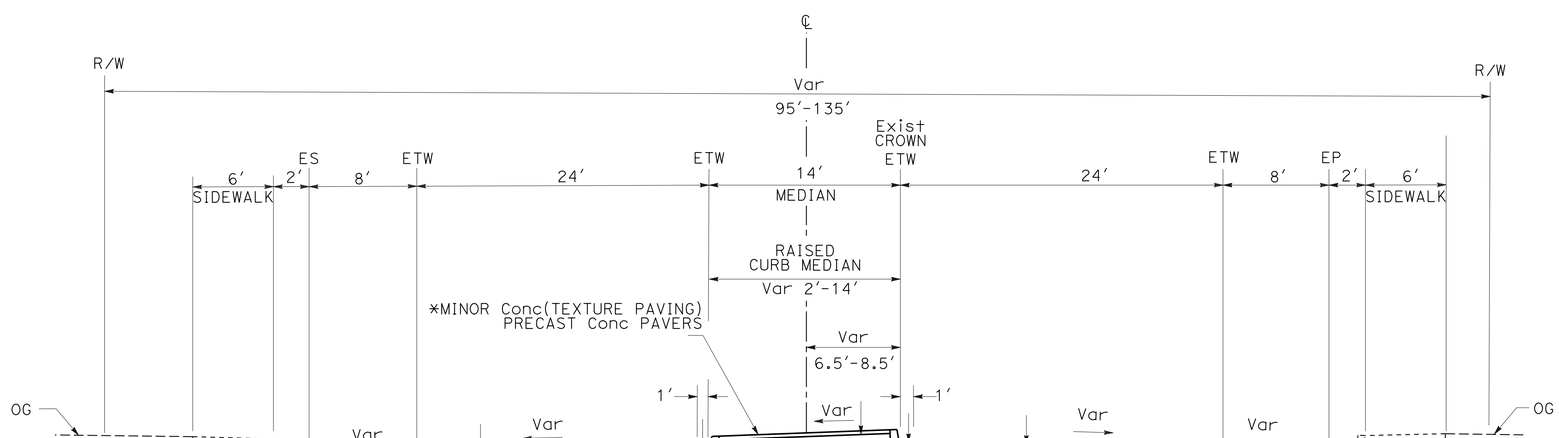

ROUTE 178

Sta 153+72 to Sta 205+47, DRUMMOND Ave TO E RIDGECREST Blvd

TYPICAL CROSS SECTIONS

NO SCALE

X-1

STATE OF CALIFORNIA - DEPARTMENT OF TRANSPORTATION
Caltrans
DESIGN
FUNCTIONAL SUPERVISOR: ARTHUR RAMIREZ
CALCULATED-DESIGNED BY: ELLERY ELLIS
CHECKED BY: SHAKILA HANIF
REVISED BY
DATE REVISED

LAST REVISION 05-22-14
DATE PLOTTED => 20-AUG-2014
TIME PLOTTED => 10:30

Dist	COUNTY	ROUTE	POST MILES TOTAL PROJECT	SHEET No.	TOTAL SHEETS
06	Ker	178	100.6/102.7	3	54

05-01-14
REGISTERED CIVIL ENGINEER DATE

6-23-14
PLANS APPROVAL DATE

REGISTERED PROFESSIONAL ENGINEER
ELLERY B. ELLIS
No. 62592
Exp. 6-30-16
CIVIL
STATE OF CALIFORNIA

THE STATE OF CALIFORNIA OR ITS OFFICERS OR AGENTS SHALL NOT BE RESPONSIBLE FOR THE ACCURACY OR COMPLETENESS OF SCANNED COPIES OF THIS PLAN SHEET.

NOTE:

1. FOR ACCURATE RIGHT OF WAY DATA, CONTACT RIGHT OF WAY ENGINEERING AT THE DISTRICT OFFICE.
2. FOR CURB SPECIAL DETAIL AND CURB OPENING DETAIL, SEE SHEET C-14.

CURVE DATA

No. ⑪	R	Δ	T	L
1	1.0	164°59′54″	7.59	2.88
2	20.0	15°27′56″	2.72	5.40
3	1.0	164°46′15″	7.48	2.88
4	50.0	21°11′06″	9.35	18.49
5	0.5	171°27′04″	6.72	1.50
6	75.0	15°23′03″	10.13	20.14
7	20.0	15°31′17″	2.73	5.42

LEGEND:

COLD PLANE AC Pvmt
PLACE 0.8′ HMA(TYPE A)

PRECAST CONCRETE PAVERS

MINOR CONCRETE (TEXTURE PAVING)

ABBREVIATIONS:

MCTP MINOR Conc (TEXTURE PAVING)

MP MINOR Conc PAVING

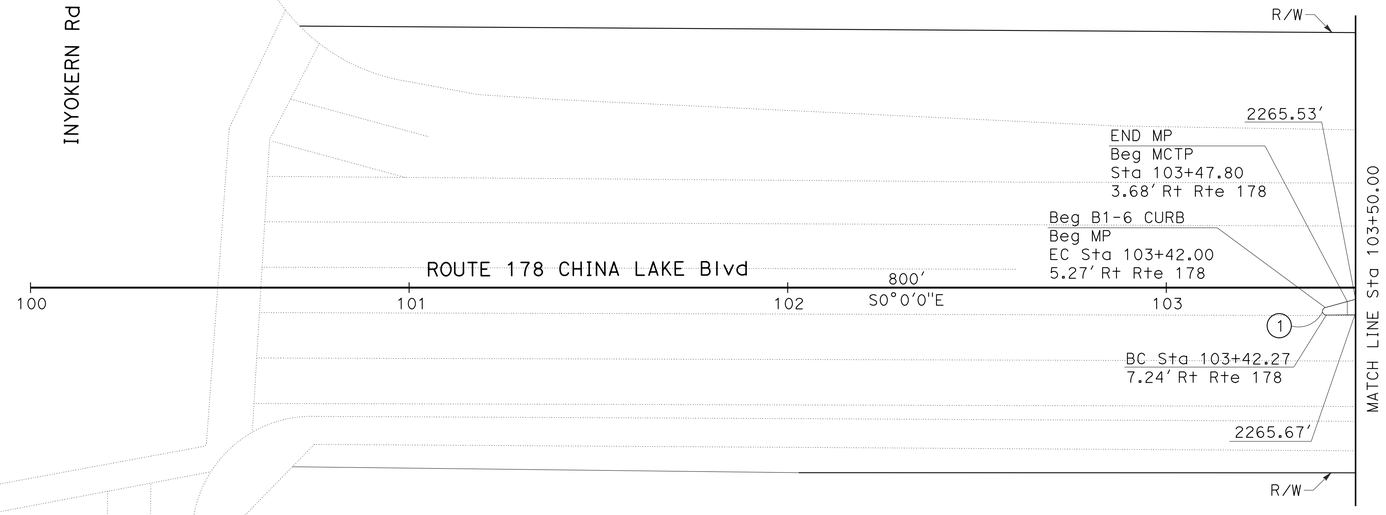

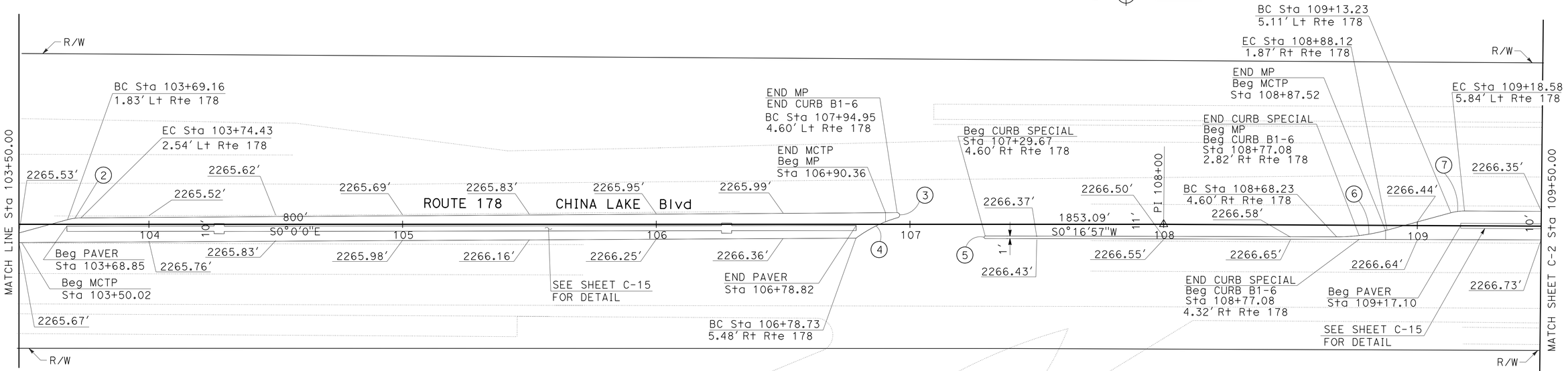

CONSTRUCTION DETAILS

SCALE:1"=20′

C-1

STATE OF CALIFORNIA - DEPARTMENT OF TRANSPORTATION
Caltrans DESIGN

FUNCTIONAL SUPERVISOR: ARTHUR RAMIREZ
CALCULATED-DESIGNED BY: SHAKILA HANIF
CHECKED BY: ELLERY ELLIS
REVISED BY / DATE REVISED

LAST REVISION 05-22-14
DATE PLOTTED => 20-AUG-2014
TIME PLOTTED => 10:30

Dist	COUNTY	ROUTE	POST MILES TOTAL PROJECT	SHEET No.	TOTAL SHEETS
06	Ker	178	100.6/102.7	4	54

REGISTERED CIVIL ENGINEER 05-01-14 DATE

6-23-14
PLANS APPROVAL DATE

REGISTERED PROFESSIONAL ENGINEER ELLERY B. ELLIS No. 62592 Exp. 6-30-16 CIVIL STATE OF CALIFORNIA

THE STATE OF CALIFORNIA OR ITS OFFICERS OR AGENTS SHALL NOT BE RESPONSIBLE FOR THE ACCURACY OR COMPLETENESS OF SCANNED COPIES OF THIS PLAN SHEET.

NOTE:

FOR ACCURATE RIGHT OF WAY DATA, CONTACT RIGHT OF WAY ENGINEERING AT THE DISTRICT OFFICE.

CURVE DATA

No. ⑧	R	Δ	T	L
8	20.0	15°49′54″	2.78	5.53
9	75.0	16°10′00″	10.65	21.16
10	0.5	174°33′13″	10.53	1.53
11	0.5	179°04′37″	62.07	1.56
12	75.0	16°39′56″	10.99	21.82
13	20.0	16°47′53″	2.95	5.86
14	1.0	160°09′39″	5.72	2.80
15	50.0	18°58′03″	8.35	16.55
16	0.5	167°59′56″	4.80	1.48
17	75.0	16°08′06″	10.63	21.12

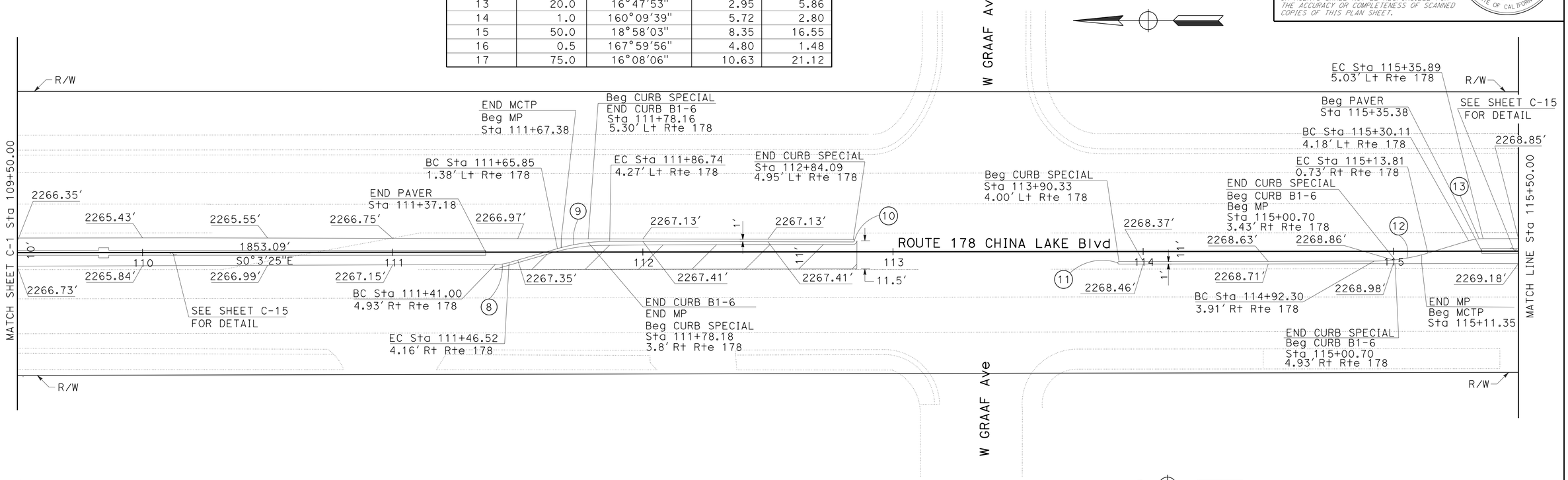

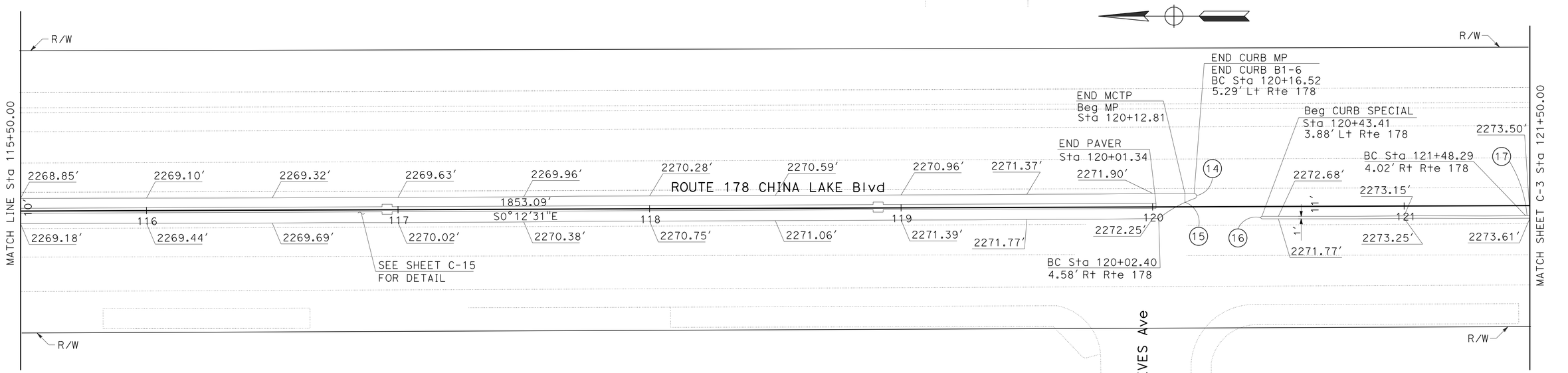

CONSTRUCTION DETAILS

SCALE:1″=20′

C-2

STATE OF CALIFORNIA - DEPARTMENT OF TRANSPORTATION

DESIGN

Caltrans

FUNCTIONAL SUPERVISOR: ARTHUR RAMIREZ

CALCULATED-DESIGNED BY: SHAKILA HANIF

CHECKED BY: ELLERY ELLIS

REVISED BY / DATE REVISED

LAST REVISION 05-22-14

DATE PLOTTED => 20-AUG-2014
TIME PLOTTED => 10:30

Dist	COUNTY	ROUTE	POST MILES TOTAL PROJECT	SHEET No.	TOTAL SHEETS
06	Ker	178	100.6/102.7	5	54

REGISTERED CIVIL ENGINEER 05-01-14 DATE

6-23-14
PLANS APPROVAL DATE

REGISTERED PROFESSIONAL ENGINEER ELLERY B. ELLIS No. 62592 Exp. 06-30-16 CIVIL STATE OF CALIFORNIA

THE STATE OF CALIFORNIA OR ITS OFFICERS OR AGENTS SHALL NOT BE RESPONSIBLE FOR THE ACCURACY OR COMPLETENESS OF SCANNED COPIES OF THIS PLAN SHEET.

NOTE:

FOR ACCURATE RIGHT OF WAY DATA, CONTACT RIGHT OF WAY ENGINEERING AT THE DISTRICT OFFICE.

CURVE DATA

No.	R	Δ	T	L
17	75.0	16°08′06″	10.63	21.12
18	20.0	16°06′46″	2.83	5.62
19	20.0	15°18′09″	2.69	5.34
20	75.0	15°09′14″	9.98	19.84
21	0.5	174°44′58″	10.90	1.52
22	0.5	178°47′28″	47.40	1.56

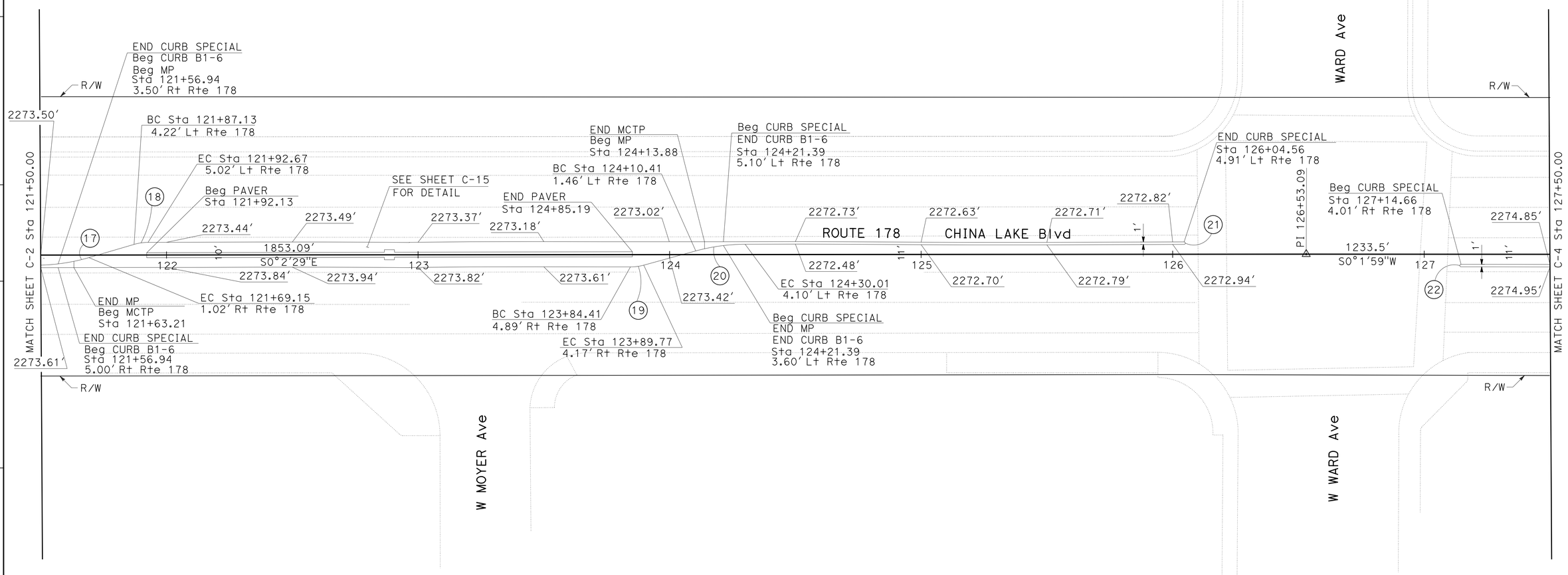

CONSTRUCTION DETAILS

C-3

SCALE:1″=20′

STATE OF CALIFORNIA - DEPARTMENT OF TRANSPORTATION
Caltrans
DESIGN

FUNCTIONAL SUPERVISOR: ARTHUR RAMIREZ
CALCULATED-DESIGNED BY: SHAKILA HANIF
CHECKED BY: ELLERY ELLIS
REVISED BY
DATE REVISED

LAST REVISION 05-22-14
DATE PLOTTED => 20-AUG-2014
TIME PLOTTED => 10:30

Dist	COUNTY	ROUTE	POST MILES TOTAL PROJECT	SHEET No.	TOTAL SHEETS
06	Ker	178	100.6/102.7	6	54

REGISTERED CIVIL ENGINEER 05-01-14 DATE

6-23-14
PLANS APPROVAL DATE

REGISTERED PROFESSIONAL ENGINEER ELLERY B. ELLIS No. 62592 Exp. 06-30-16 CIVIL STATE OF CALIFORNIA

THE STATE OF CALIFORNIA OR ITS OFFICERS OR AGENTS SHALL NOT BE RESPONSIBLE FOR THE ACCURACY OR COMPLETENESS OF SCANNED COPIES OF THIS PLAN SHEET.

NOTE:

FOR ACCURATE RIGHT OF WAY DATA, CONTACT RIGHT OF WAY ENGINEERING AT THE DISTRICT OFFICE.

CURVE DATA

No. Ⓗ	R	Δ	T	L
23	75.0	15°23′05″	10.13	20.14
24	20.0	15°18′31″	2.69	5.34
25	20.0	16°59′20″	2.99	5.93
26	75.0	16°55′37″	11.16	22.16
27	0.5	173°08′34″	8.41	1.52
28	0.5	179°29′24″	112.32	1.57

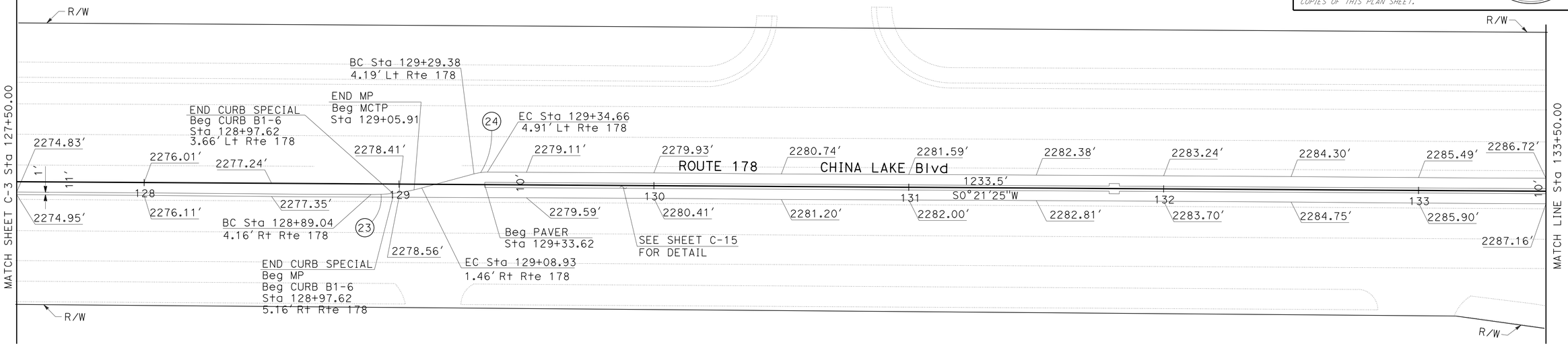

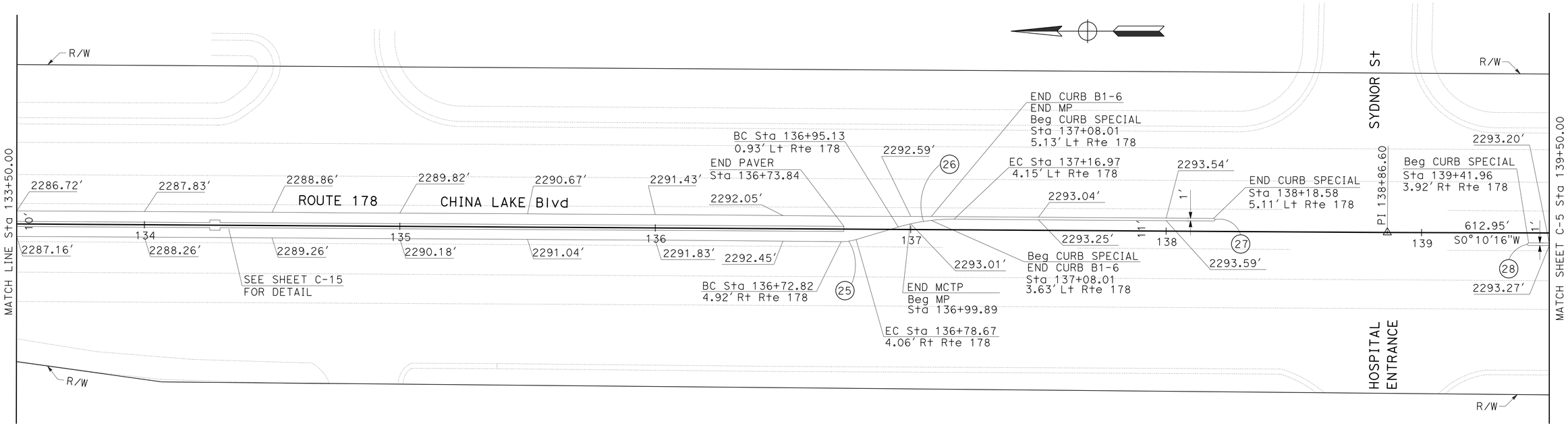

CONSTRUCTION DETAILS

C-4

SCALE:1"=20′

STATE OF CALIFORNIA - DEPARTMENT OF TRANSPORTATION
Caltrans® DESIGN

FUNCTIONAL SUPERVISOR: ARTHUR RAMIREZ
CALCULATED-DESIGNED BY: SHAKILA HANIF
CHECKED BY: ELLERY ELLIS
REVISED BY / DATE REVISED

LAST REVISION 05-22-14
DATE PLOTTED => 20-AUG-2014
TIME PLOTTED => 10:30

Dist	COUNTY	ROUTE	POST MILES TOTAL PROJECT	SHEET No.	TOTAL SHEETS
06	Ker	178	100.6/102.7	7	54

REGISTERED CIVIL ENGINEER 05-01-14 DATE

6-23-14
PLANS APPROVAL DATE

REGISTERED PROFESSIONAL ENGINEER ELLERY B. ELLIS No. 62592 Exp. 06-30-16 CIVIL STATE OF CALIFORNIA

THE STATE OF CALIFORNIA OR ITS OFFICERS OR AGENTS SHALL NOT BE RESPONSIBLE FOR THE ACCURACY OR COMPLETENESS OF SCANNED COPIES OF THIS PLAN SHEET.

NOTE:

FOR ACCURATE RIGHT OF WAY DATA, CONTACT RIGHT OF WAY ENGINEERING AT THE DISTRICT OFFICE.

CURVE DATA

No. ⊛	R	Δ	T	L
29	75.0	16°47′09"	11.07	21.97
30	20.0	16°45′49"	2.95	5.85
31	1.0	159°40′22"	5.58	2.79
32	50.0	18°44′01"	8.25	16.35
33	0.5	175°38′20"	13.14	1.53
34	75.0	16°36′08"	10.94	21.73
35	20.0	16°42′26"	2.94	5.83
36	20.0	14°23′02"	2.52	5.02
37	75.0	14°41′01"	9.66	19.22

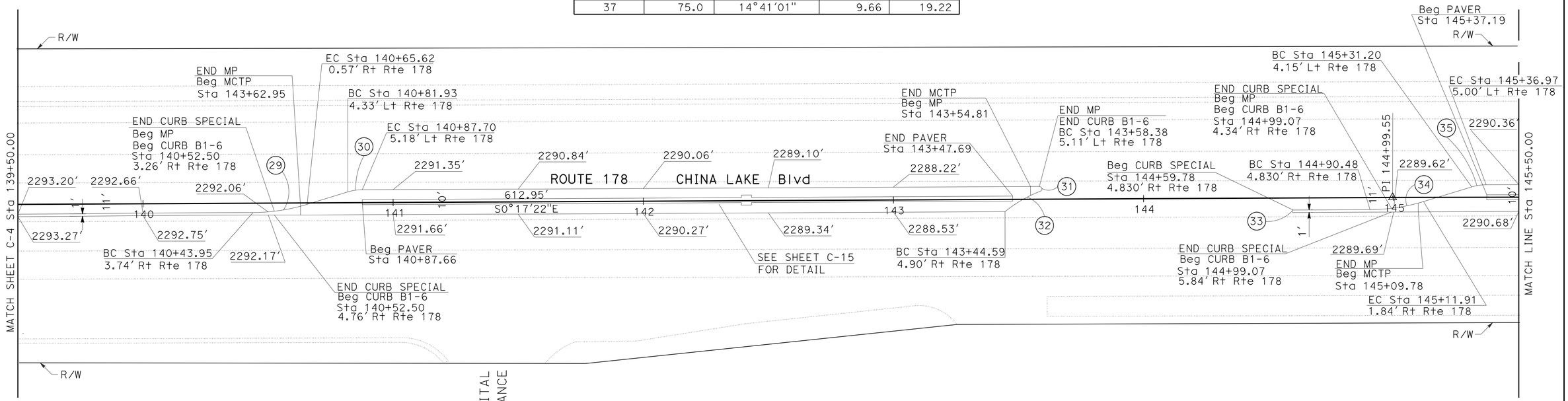

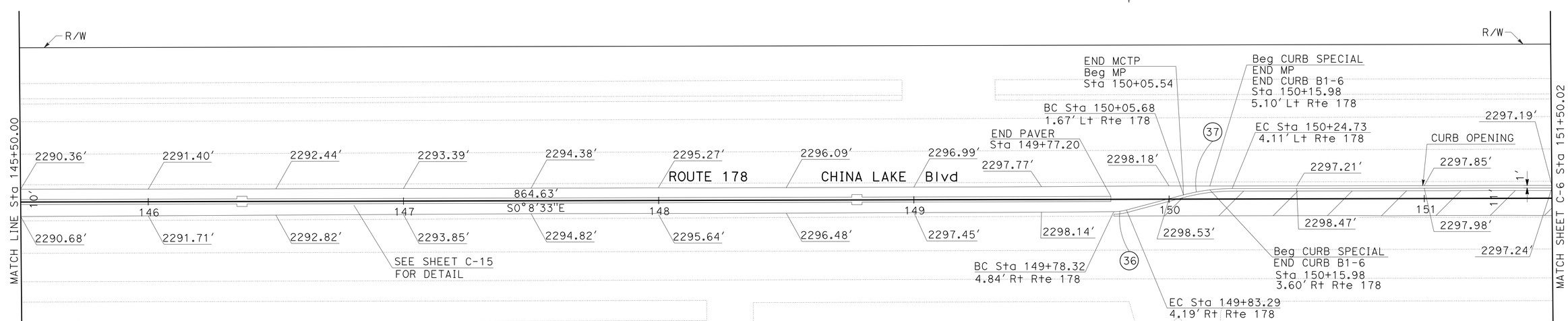

SCALE:1"=20′

CONSTRUCTION DETAILS
C-5

STATE OF CALIFORNIA - DEPARTMENT OF TRANSPORTATION
Caltrans DESIGN

FUNCTIONAL SUPERVISOR: ARTHUR RAMIREZ
CALCULATED-DESIGNED BY: SHAKILA HANIF
CHECKED BY: ELLERY ELLIS
REVISED BY / DATE REVISED

LAST REVISION 05-22-14 | DATE PLOTTED => 20-AUG-2014 | TIME PLOTTED => 10:30

Dist	COUNTY	ROUTE	POST MILES TOTAL PROJECT	SHEET No.	TOTAL SHEETS
06	Ker	178	100.6/102.7	8	54

REGISTERED CIVIL ENGINEER 05-01-14 DATE

6-23-14
PLANS APPROVAL DATE

REGISTERED PROFESSIONAL ENGINEER ELLERY B. ELLIS No. 62592 Exp. 06-30-16 CIVIL STATE OF CALIFORNIA

THE STATE OF CALIFORNIA OR ITS OFFICERS OR AGENTS SHALL NOT BE RESPONSIBLE FOR THE ACCURACY OR COMPLETENESS OF SCANNED COPIES OF THIS PLAN SHEET.

NOTE:

FOR ACCURATE RIGHT OF WAY DATA, CONTACT RIGHT OF WAY ENGINEERING AT THE DISTRICT OFFICE.

CURVE DATA

No. Ⓡ	R	Δ	T	L
38	0.5	177°32′09″	23.25	1.55
39	1.0	178°54′21″	104.72	3.12
40	75.0	16°27′57″	10.85	21.55
41	20.0	16°13′28″	2.85	5.66

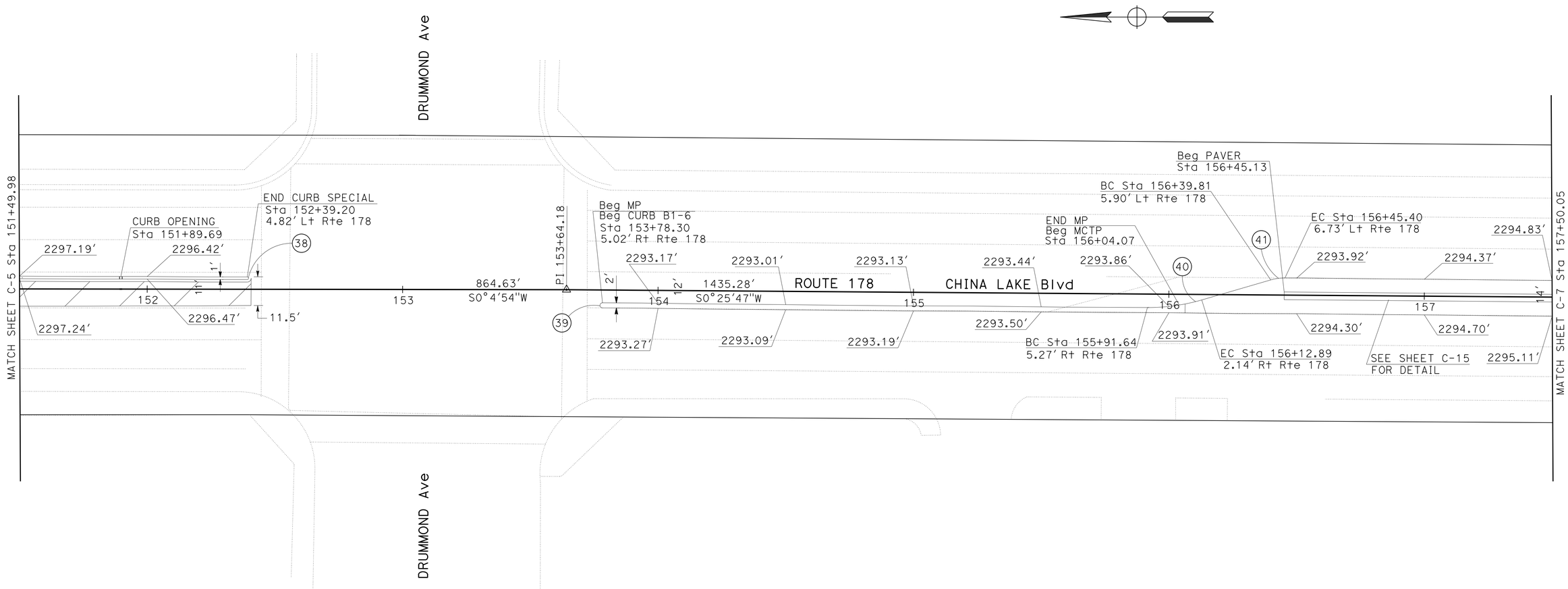

CONSTRUCTION DETAILS

SCALE:1"=20′

C-6

STATE OF CALIFORNIA - DEPARTMENT OF TRANSPORTATION
Caltrans® DESIGN

FUNCTIONAL SUPERVISOR: ARTHUR RAMIREZ

CALCULATED-DESIGNED BY: SHAKILA HANIF
CHECKED BY: ELLERY ELLIS

REVISED BY
DATE REVISED

LAST REVISION 05-22-14
DATE PLOTTED => 20-AUG-2014
TIME PLOTTED => 10:30

Dist	COUNTY	ROUTE	POST MILES TOTAL PROJECT	SHEET No.	TOTAL SHEETS
06	Ker	178	100.6/102.7	9	54

REGISTERED CIVIL ENGINEER 05-01-14 DATE

6-23-14
PLANS APPROVAL DATE

REGISTERED PROFESSIONAL ENGINEER ELLERY B. ELLIS No. 62592 Exp. 06-30-16 CIVIL STATE OF CALIFORNIA

THE STATE OF CALIFORNIA OR ITS OFFICERS OR AGENTS SHALL NOT BE RESPONSIBLE FOR THE ACCURACY OR COMPLETENESS OF SCANNED COPIES OF THIS PLAN SHEET.

NOTE:

FOR ACCURATE RIGHT OF WAY DATA, CONTACT RIGHT OF WAY ENGINEERING AT THE DISTRICT OFFICE.

CURVE DATA

No. ⊕	R	Δ	T	L
42	20.0	16°52′24"	2.97	5.89
43	75.0	16°34′27"	10.92	21.70
44	1.0	178°24′04"	71.71	3.12
45	1.0	163°51′30"	6.71	2.72
46	75.0	16°37′34"	10.96	21.76
47	20.0	16°38′33"	2.93	5.81
48	20.0	16°50′02"	2.96	5.88
49	75.0	16°39′29"	10.98	21.81
50	1.0	179°03′33"	121.80	3.13
51	7.0	178°14′37"	456.76	21.78

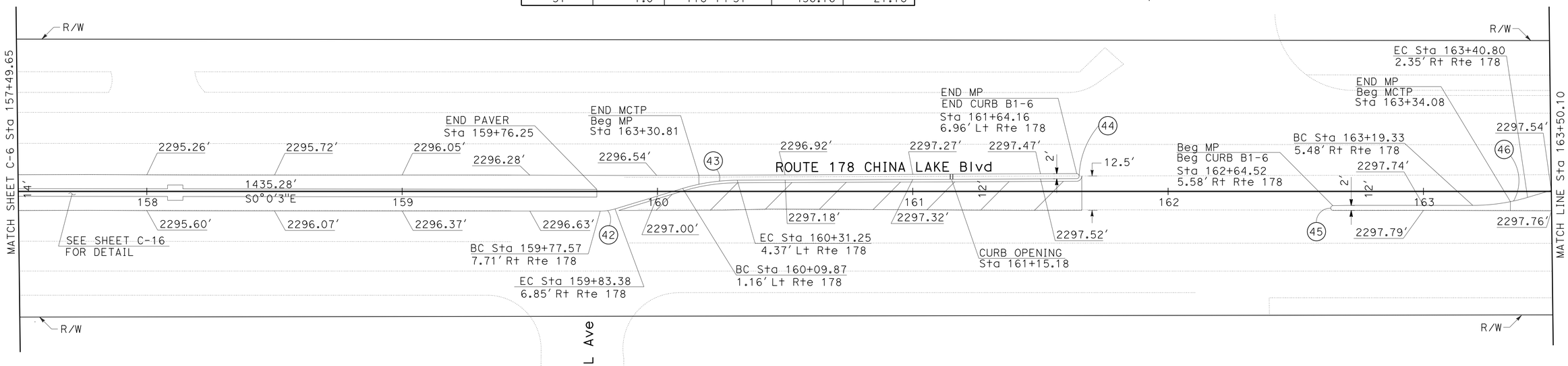

CONSTRUCTION DETAILS

C-7

SCALE:1"=20′

STATE OF CALIFORNIA - DEPARTMENT OF TRANSPORTATION
Caltrans
DESIGN

FUNCTIONAL SUPERVISOR: ARTHUR RAMIREZ
CALCULATED-DESIGNED BY: SHAKILA HANIF
CHECKED BY: ELLERY ELLIS
REVISED BY
DATE REVISED

LAST REVISION 05-22-14
DATE PLOTTED => 20-AUG-2014
TIME PLOTTED => 10:30

Dist	COUNTY	ROUTE	POST MILES TOTAL PROJECT	SHEET No.	TOTAL SHEETS
06	Ker	178	100.6/102.7	10	54

REGISTERED CIVIL ENGINEER 05-01-14 DATE

6-23-14
PLANS APPROVAL DATE

REGISTERED PROFESSIONAL ENGINEER ELLERY B. ELLIS No. 62592 Exp. 06-30-16 CIVIL STATE OF CALIFORNIA

THE STATE OF CALIFORNIA OR ITS OFFICERS OR AGENTS SHALL NOT BE RESPONSIBLE FOR THE ACCURACY OR COMPLETENESS OF SCANNED COPIES OF THIS PLAN SHEET.

NOTE:

FOR ACCURATE RIGHT OF WAY DATA, CONTACT RIGHT OF WAY ENGINEERING AT THE DISTRICT OFFICE.

CURVE DATA

No. ⑪	R	Δ	T	L
52	50.0	41°51′09″	19.12	36.52
53	0.5	164°43′11″	3.78	1.46
54	0.5	151°07′54″	2.01	1.36
55	75.0	16°35′13″	10.93	21.71
56	20.0	16°34′50″	2.91	5.79

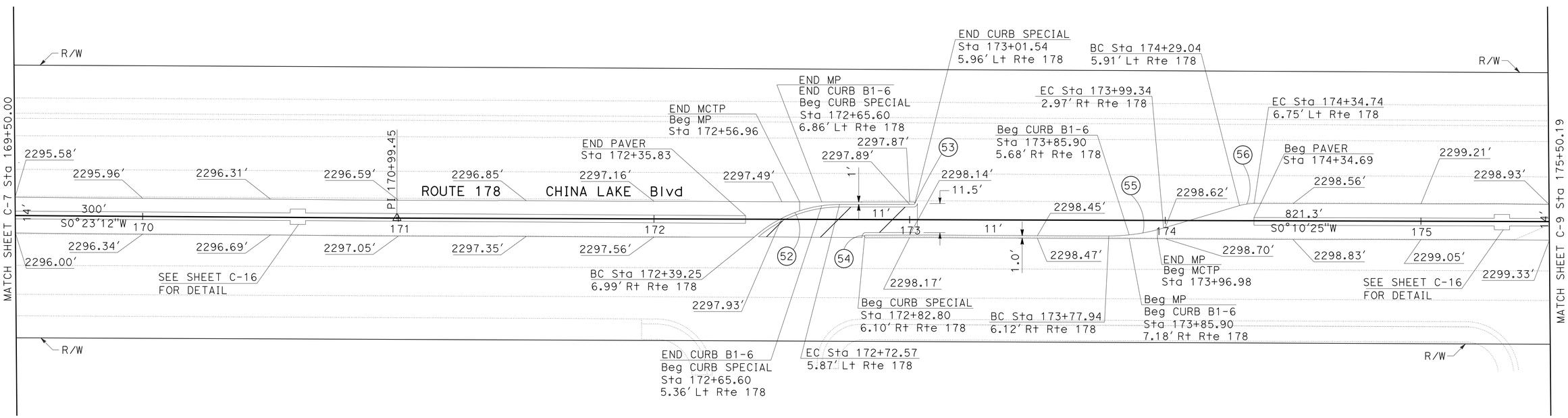

CONSTRUCTION DETAILS

SCALE:1"=20′

C-8

STATE OF CALIFORNIA - DEPARTMENT OF TRANSPORTATION
Caltrans DESIGN

FUNCTIONAL SUPERVISOR: ARTHUR RAMIREZ
CALCULATED-DESIGNED BY: SHAKILA HANIF
CHECKED BY: ELLERY ELLIS
REVISED BY
DATE REVISED

LAST REVISION 05-22-14
DATE PLOTTED => 20-AUG-2014
TIME PLOTTED => 10:30

Dist	COUNTY	ROUTE	POST MILES TOTAL PROJECT	SHEET No.	TOTAL SHEETS
06	Ker	178	100.6/102.7	11	54

05-01-14
REGISTERED CIVIL ENGINEER DATE

6-23-14
PLANS APPROVAL DATE

REGISTERED PROFESSIONAL ENGINEER
ELLERY B. ELLIS
No. 62592
Exp. 06-30-16
CIVIL
STATE OF CALIFORNIA

THE STATE OF CALIFORNIA OR ITS OFFICERS OR AGENTS SHALL NOT BE RESPONSIBLE FOR THE ACCURACY OR COMPLETENESS OF SCANNED COPIES OF THIS PLAN SHEET.

NOTE:

FOR ACCURATE RIGHT OF WAY DATA, CONTACT RIGHT OF WAY ENGINEERING AT THE DISTRICT OFFICE.

CURVE DATA

No. ⊕	R	Δ	T	L
57	20.0	16°19′22″	2.87	5.70
58	75.0	16°22′46″	10.79	21.44
59	1.0	161°43′57″	6.30	2.86
60	1.0	170°46′10″	12.40	2.98

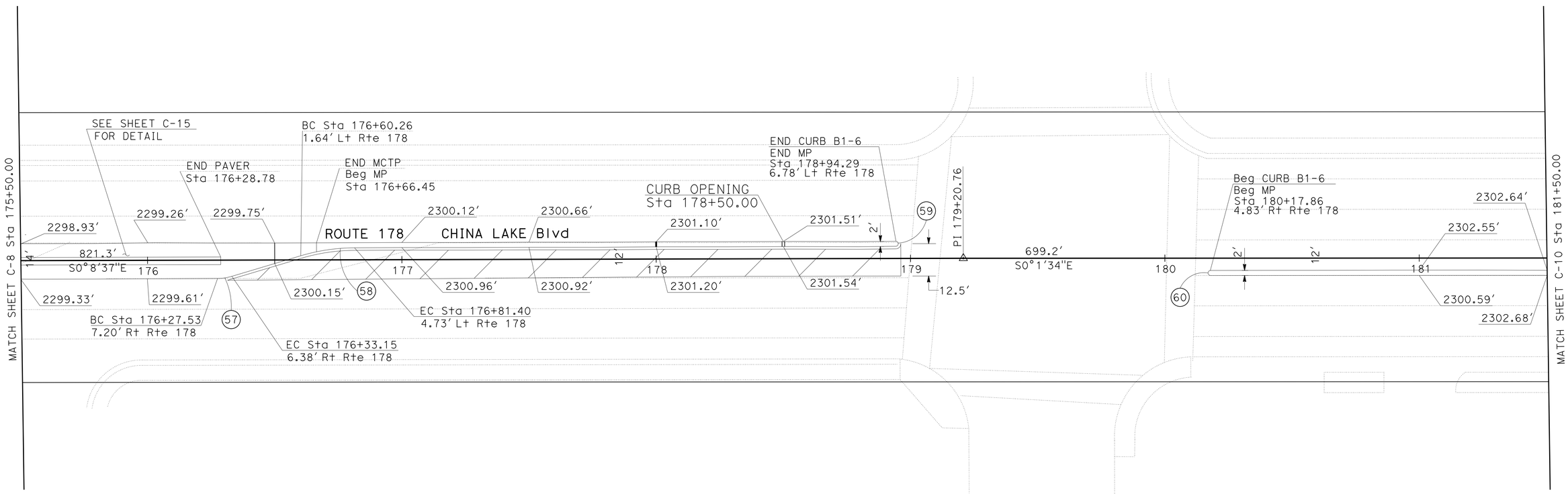

CONSTRUCTION DETAILS

SCALE:1"=20′

C-9

STATE OF CALIFORNIA - DEPARTMENT OF TRANSPORTATION
Caltrans
DESIGN

FUNCTIONAL SUPERVISOR: ARTHUR RAMIREZ
CALCULATED-DESIGNED BY: SHAKILA HANIF
CHECKED BY: ELLERY ELLIS
REVISED BY
DATE REVISED

LAST REVISION 05-22-14
DATE PLOTTED => 20-AUG-2014
TIME PLOTTED => 10:30

Dist	COUNTY	ROUTE	POST MILES TOTAL PROJECT	SHEET No.	TOTAL SHEETS
06	Ker	178	100.6/102.7	12	54

REGISTERED CIVIL ENGINEER 05-01-14 DATE

6-23-14
PLANS APPROVAL DATE

REGISTERED PROFESSIONAL ENGINEER ELLERY B. ELLIS No. 62592 Exp. 06-30-16 CIVIL STATE OF CALIFORNIA

THE STATE OF CALIFORNIA OR ITS OFFICERS OR AGENTS SHALL NOT BE RESPONSIBLE FOR THE ACCURACY OR COMPLETENESS OF SCANNED COPIES OF THIS PLAN SHEET.

NOTE:

FOR ACCURATE RIGHT OF WAY DATA, CONTACT RIGHT OF WAY ENGINEERING AT THE DISTRICT OFFICE.

CURVE DATA

No. ⊕	R	Δ	T	L
61	75.0	17°06′51″	11.29	22.40
62	20.0	16°51′18″	2.96	5.88
63	20.0	16°47′08″	2.95	5.86
64	75.0	16°43′40″	11.03	21.90
65	1.0	178°02′32″	58.58	3.11
66	1.0	177°20′24″	43.09	3.10
67	75.0	16°33′41″	10.92	21.68
68	20.0	16°03′54″	2.82	5.61
69	0.5	178°17′08″	33.42	1.56
70	50.0	42°03′12″	19.22	36.70
71	0.5	141°43′56″	1.53	1.31

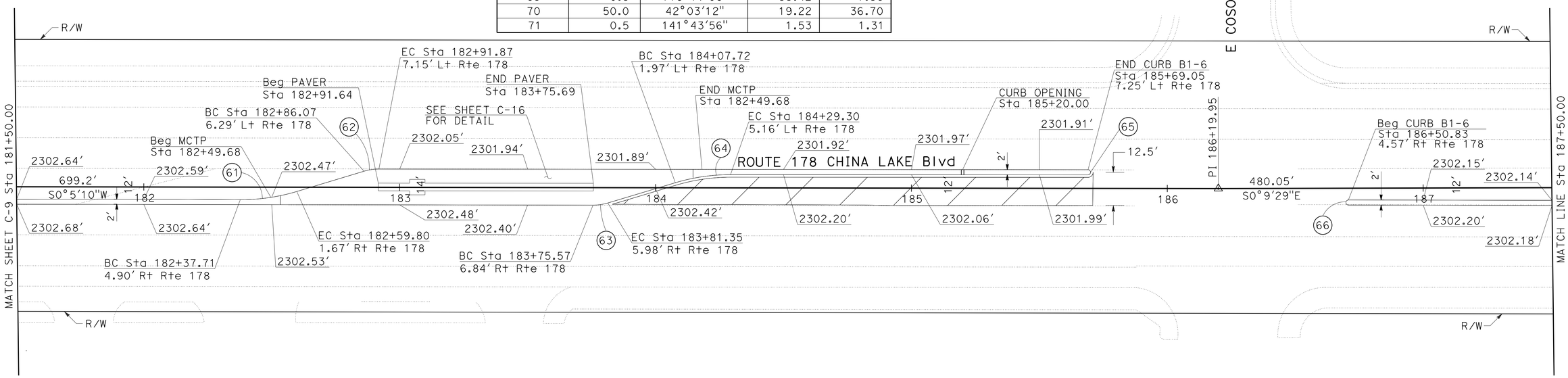

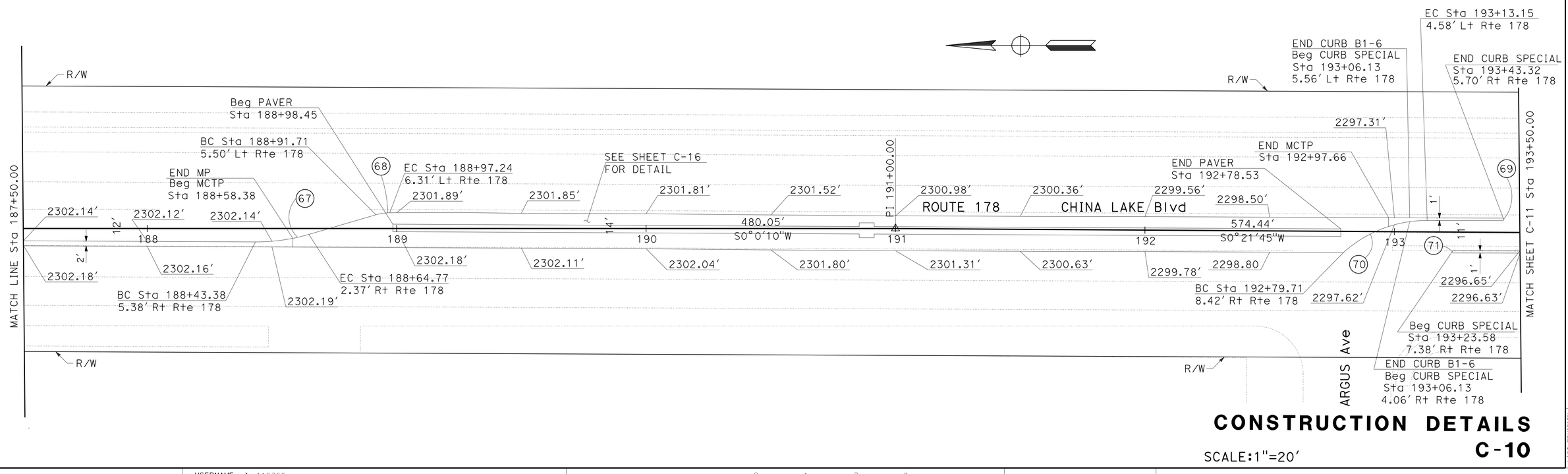

CONSTRUCTION DETAILS

SCALE:1"=20′

C-10

REVISED BY | DATE REVISED

SHAKILA HANIF | ELLERY ELLIS

CALCULATED-DESIGNED BY | CHECKED BY

FUNCTIONAL SUPERVISOR: ARTHUR RAMIREZ

STATE OF CALIFORNIA - DEPARTMENT OF TRANSPORTATION

Caltrans® DESIGN

LAST REVISION 05-22-14 | DATE PLOTTED => 20-AUG-2014 | TIME PLOTTED => 10:30

Dist	COUNTY	ROUTE	POST MILES TOTAL PROJECT	SHEET No.	TOTAL SHEETS
06	Ker	178	100.6/102.7	13	54

REGISTERED CIVIL ENGINEER 05-01-14 DATE

6-23-14
PLANS APPROVAL DATE

REGISTERED PROFESSIONAL ENGINEER ELLERY B. ELLIS No. 62592 Exp. 06-30-16 CIVIL STATE OF CALIFORNIA

THE STATE OF CALIFORNIA OR ITS OFFICERS OR AGENTS SHALL NOT BE RESPONSIBLE FOR THE ACCURACY OR COMPLETENESS OF SCANNED COPIES OF THIS PLAN SHEET.

NOTE:

FOR ACCURATE RIGHT OF WAY DATA, CONTACT RIGHT OF WAY ENGINEERING AT THE DISTRICT OFFICE.

CURVE DATA

No. ®	R	Δ	T	L
72	75.0	16°53′41"	11.14	22.12
73	20.0	16°58′50"	2.99	5.93
74	20.0	16°52′12"	2.97	5.89
75	75.0	16°43′33"	11.03	21.89
76	20000.0	00°21′35"	62.77	125.55
77	1.0	177°15′14"	41.73	3.09
78	1.0	174°17′18"	19.96	3.03

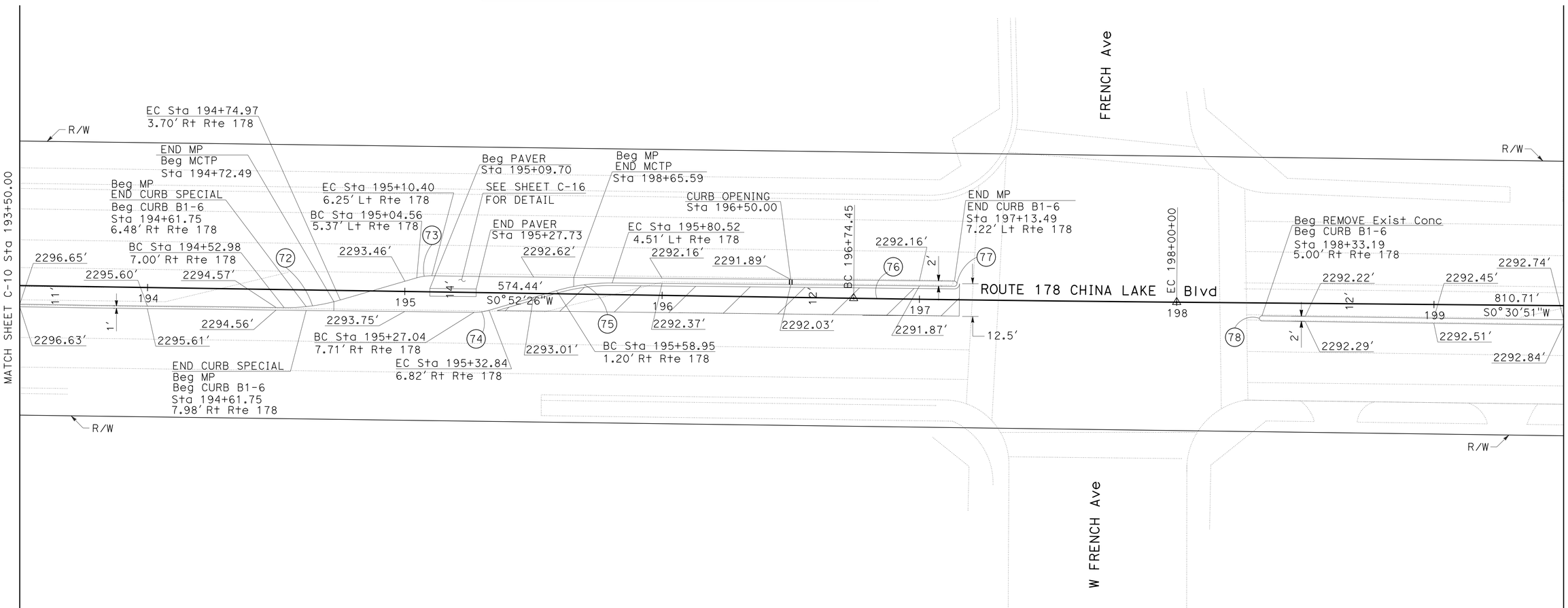

CONSTRUCTION DETAILS

C-11

SCALE:1"=20′

STATE OF CALIFORNIA - DEPARTMENT OF TRANSPORTATION
Caltrans
DESIGN

FUNCTIONAL SUPERVISOR: ARTHUR RAMIREZ
CALCULATED-DESIGNED BY: SHAKILA HANIF
CHECKED BY: ELLERY ELLIS
REVISED BY
DATE REVISED

LAST REVISION 05-22-14
DATE PLOTTED => 20-AUG-2014
TIME PLOTTED => 10:30

Dist	COUNTY	ROUTE	POST MILES TOTAL PROJECT	SHEET No.	TOTAL SHEETS
06	Ker	178	100.6/102.7	14	54

REGISTERED CIVIL ENGINEER 05-01-14 DATE

6-23-14
PLANS APPROVAL DATE

REGISTERED PROFESSIONAL ENGINEER ELLERY B. ELLIS No. 62592 Exp. 06-30-16 CIVIL STATE OF CALIFORNIA

THE STATE OF CALIFORNIA OR ITS OFFICERS OR AGENTS SHALL NOT BE RESPONSIBLE FOR THE ACCURACY OR COMPLETENESS OF SCANNED COPIES OF THIS PLAN SHEET.

NOTE:

FOR ACCURATE RIGHT OF WAY DATA, CONTACT RIGHT OF WAY ENGINEERING AT THE DISTRICT OFFICE.

CURVE DATA

No. ⊛	R	Δ	T	L
79	75.0	16°47′30″	11.07	21.98
80	20.0	16°47′18″	2.95	5.86
81	20.0	16°39′09″	2.93	5.81
82	75.0	16°38′58″	10.97	21.79
83	0.5	136°05′44″	1.34	1.28
84	0.5	161°46′54″	3.17	1.43
85	50.0	42°14′17″	19.31	36.86
86	20.0	17°09′35″	3.02	5.99
87	75.0	16°43′37″	11.03	21.90

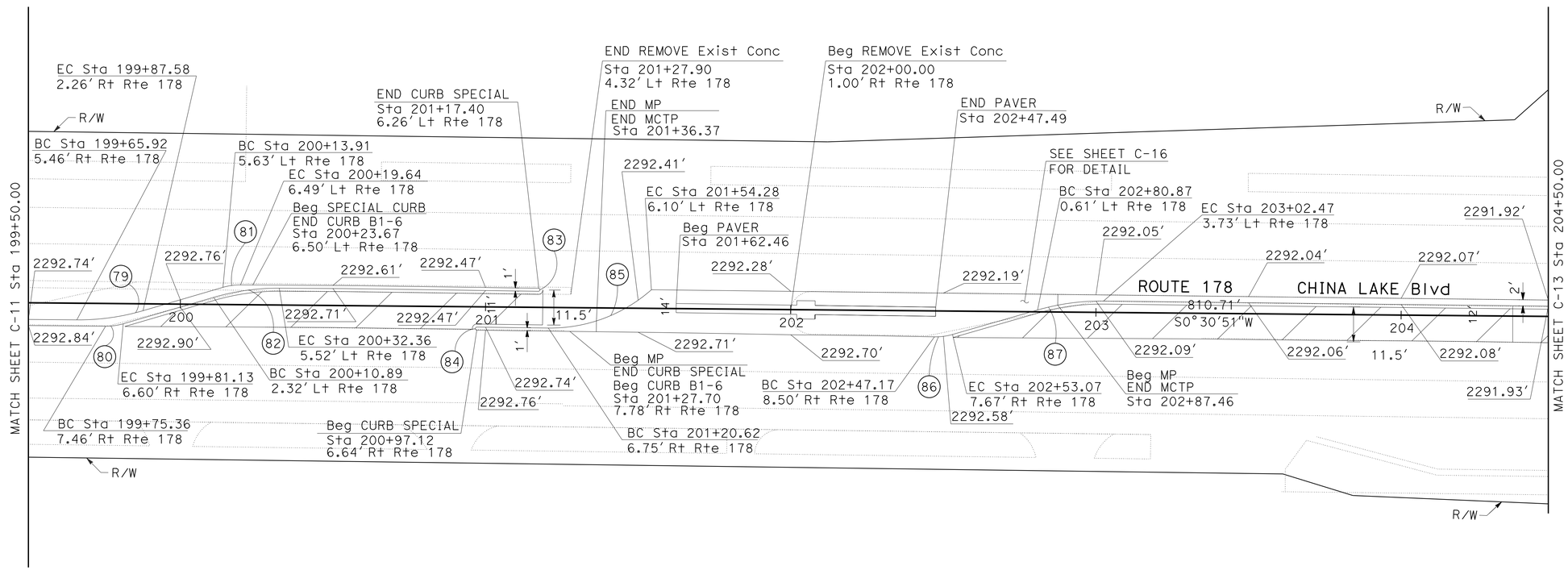

CONSTRUCTION DETAILS

C-12

SCALE:1"=20′

STATE OF CALIFORNIA - DEPARTMENT OF TRANSPORTATION
Caltrans DESIGN

FUNCTIONAL SUPERVISOR ARTHUR RAMIREZ

CALCULATED-DESIGNED BY SHAKILA HANIF
CHECKED BY ELLERY ELLIS

REVISED BY
DATE REVISED

LAST REVISION 05-20-14
DATE PLOTTED => 20-AUG-2014
TIME PLOTTED => 10:30

Dist	COUNTY	ROUTE	POST MILES TOTAL PROJECT	SHEET No.	TOTAL SHEETS
06	Ker	178	100.6/102.7	15	54

REGISTERED CIVIL ENGINEER 05-01-14 DATE

6-23-14
PLANS APPROVAL DATE

REGISTERED PROFESSIONAL ENGINEER ELLERY B. ELLIS No. 62592 Exp. 06-30-16 CIVIL STATE OF CALIFORNIA

THE STATE OF CALIFORNIA OR ITS OFFICERS OR AGENTS SHALL NOT BE RESPONSIBLE FOR THE ACCURACY OR COMPLETENESS OF SCANNED COPIES OF THIS PLAN SHEET.

NOTE:

FOR ACCURATE RIGHT OF WAY DATA, CONTACT RIGHT OF WAY ENGINEERING AT THE DISTRICT OFFICE.

CURVE DATA

No. ⊕	R	Δ	T	L
88	1.0	170°48′44″	12.49	2.99
89	0.5	178°33′23″	39.69	1.56
90	75.0	15°21′47″	10.12	20.11
91	20.0	15°22′06″	2.70	5.36
92	20.0	15°31′53″	2.73	5.42
93	75.0	15°37′54″	10.29	20.46
94	0.5	176°13′45″	15.19	1.54

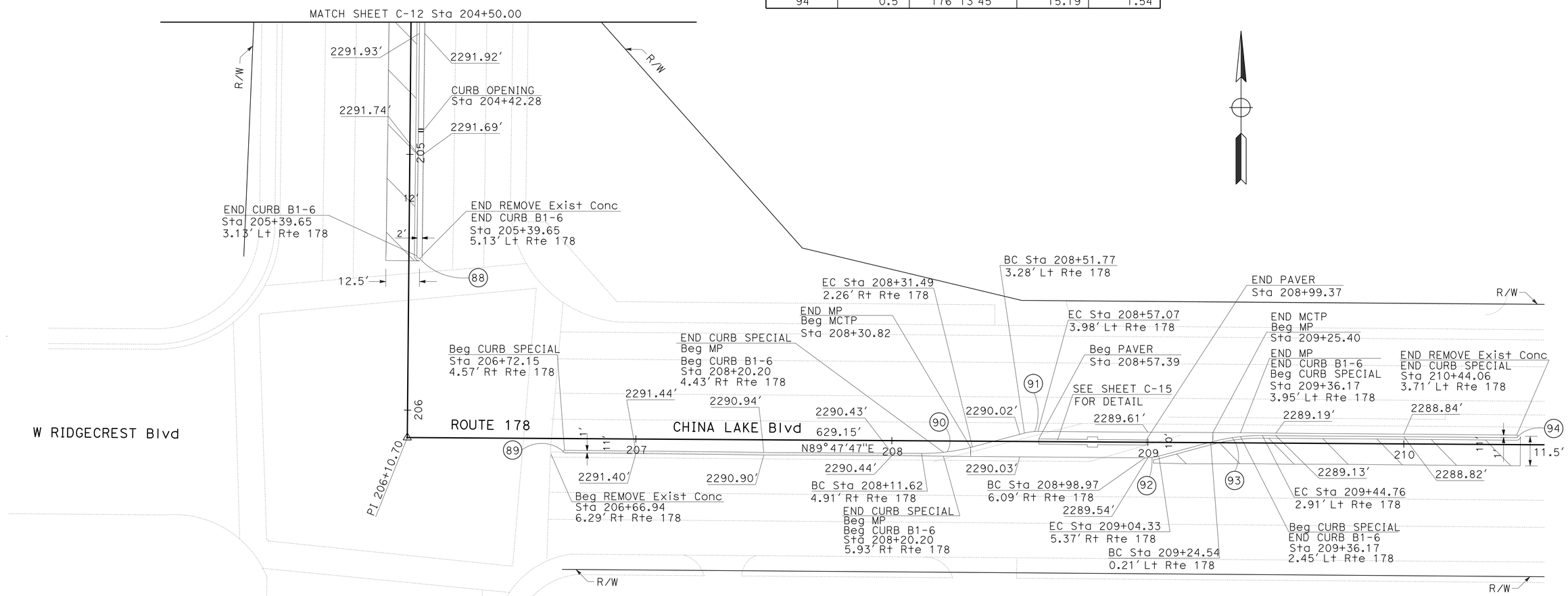

CONSTRUCTION DETAILS

C-13

SCALE:1"=20′

STATE OF CALIFORNIA - DEPARTMENT OF TRANSPORTATION
Caltrans DESIGN

FUNCTIONAL SUPERVISOR: ARTHUR RAMIREZ
CALCULATED-DESIGNED BY: SHAKILA HANIF
CHECKED BY: ELLERY ELLIS
REVISED BY
DATE REVISED

LAST REVISION 05-22-14
DATE PLOTTED => 20-AUG-2014
TIME PLOTTED => 10:30

Dist	COUNTY	ROUTE	POST MILES TOTAL PROJECT	SHEET No.	TOTAL SHEETS
06	Ker	178	100.6/102.7	16	54

REGISTERED CIVIL ENGINEER 05-01-14 DATE

6-23-14
PLANS APPROVAL DATE

REGISTERED PROFESSIONAL ENGINEER ELLERY B. ELLIS No. 62592 Exp. 06-30-16 CIVIL STATE OF CALIFORNIA

THE STATE OF CALIFORNIA OR ITS OFFICERS OR AGENTS SHALL NOT BE RESPONSIBLE FOR THE ACCURACY OR COMPLETENESS OF SCANNED COPIES OF THIS PLAN SHEET.

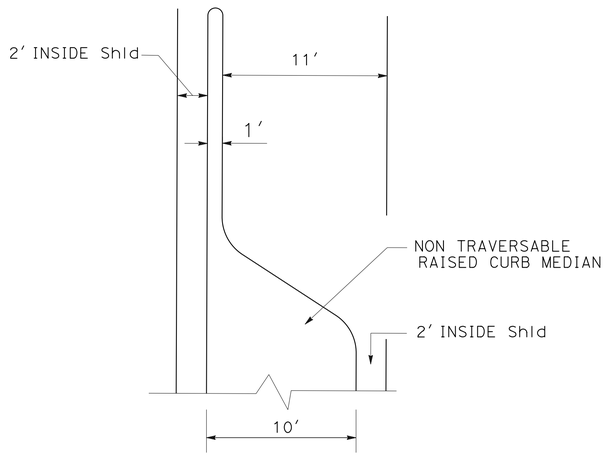

LEFT TURN POCKETS

Sta 153+00 to Sta 206+10, DRUMMOND Ave TO E RIDGECREST Blvd

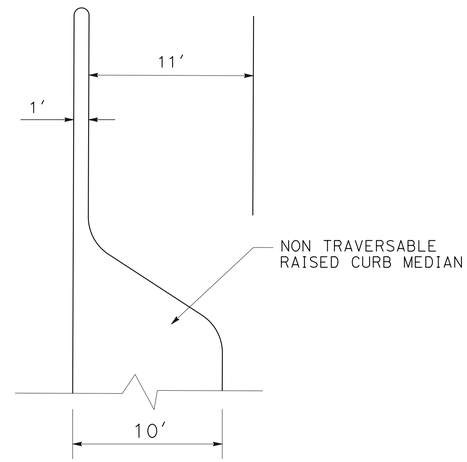

LEFT TURN POCKETS

Sta 100+00 TO Sta 153+00, INYOKERN Rd TO DRUMMOND Ave
Sta 206+10 TO Sta 212+36, E RIDGECREST Blvd TO GEMSTONE St

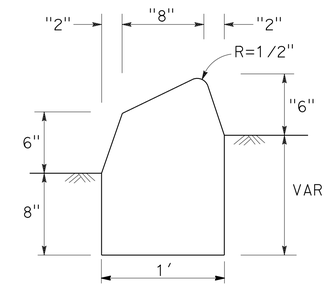

CURB SPECIAL DETAIL

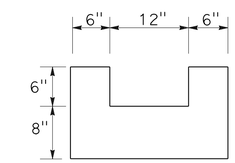

CURB OPENING DETAIL

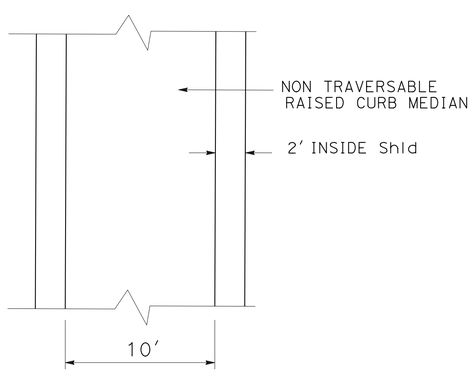

MID-BLOCK MEDIAN BETWEEN INTERSECTIONS

Sta 153+00 to Sta 206+10, DRUMMOND Ave TO E RIDGECREST Blvd

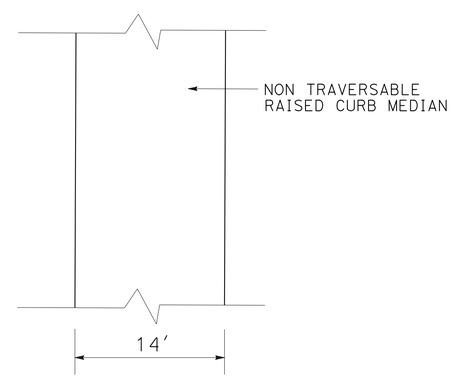

MID-BLOCK MEDIAN BETWEEN INTERSECTIONS

Sta 100+00 TO Sta 153+00, INYOKERN Rd TO DRUMMOND Ave
Sta 206+10 TO Sta 212+36, E RIDGECREST Blvd TO GEMSTONE St

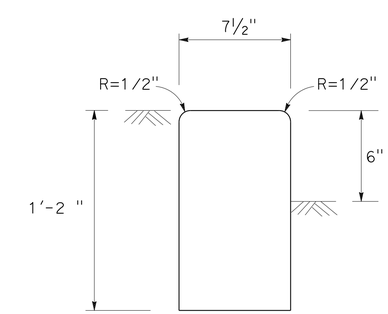

CURB A1 MODIFIED

CONSTRUCTION DETAILS

NO SCALE

C-14

STATE OF CALIFORNIA - DEPARTMENT OF TRANSPORTATION
Caltrans
DESIGN
FUNCTIONAL SUPERVISOR ARTHUR RAMIREZ
CALCULATED-DESIGNED BY SHAKILA HANIF
CHECKED BY ELLERY ELLIS
REVISED BY
DATE REVISED

LAST REVISION 05-22-14
DATE PLOTTED => 20-AUG-2014
TIME PLOTTED => 10:30

Dist	COUNTY	ROUTE	POST MILES TOTAL PROJECT	SHEET No.	TOTAL SHEETS
06	Ker	178	100.6/102.7	17	54

REGISTERED CIVIL ENGINEER 05-01-14 DATE

6-23-14
PLANS APPROVAL DATE

REGISTERED PROFESSIONAL ENGINEER ELLERY B. ELLIS No. 62592 Exp. 06-30-16 CIVIL STATE OF CALIFORNIA

THE STATE OF CALIFORNIA OR ITS OFFICERS OR AGENTS SHALL NOT BE RESPONSIBLE FOR THE ACCURACY OR COMPLETENESS OF SCANNED COPIES OF THIS PLAN SHEET.

NOTE:

1. SET PAVERS FLUSH WITH TOP OF Conc CURB.

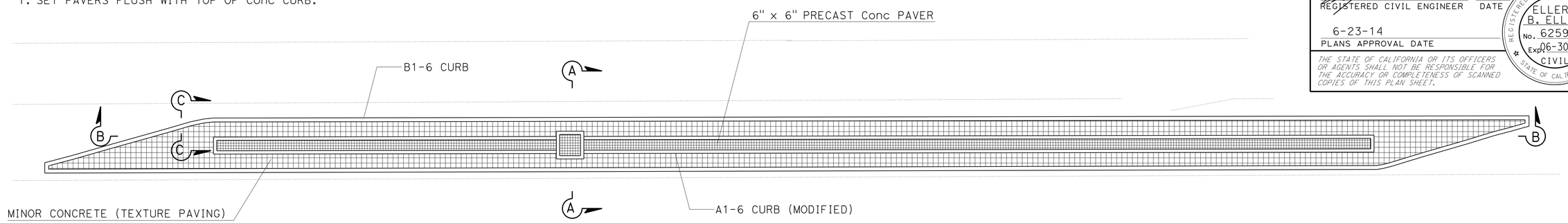

PLAN

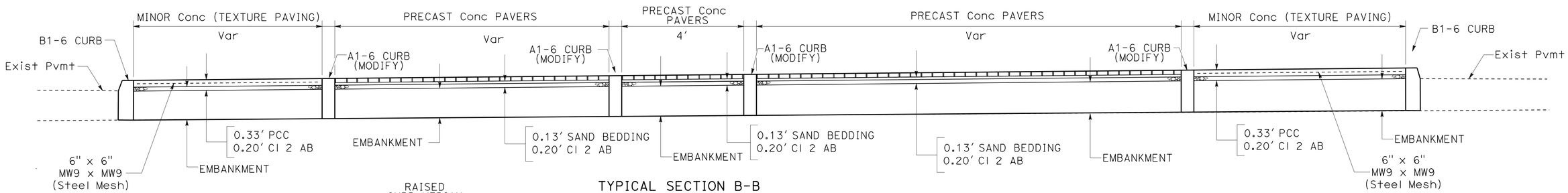

TYPICAL SECTION B-B
CASE 1

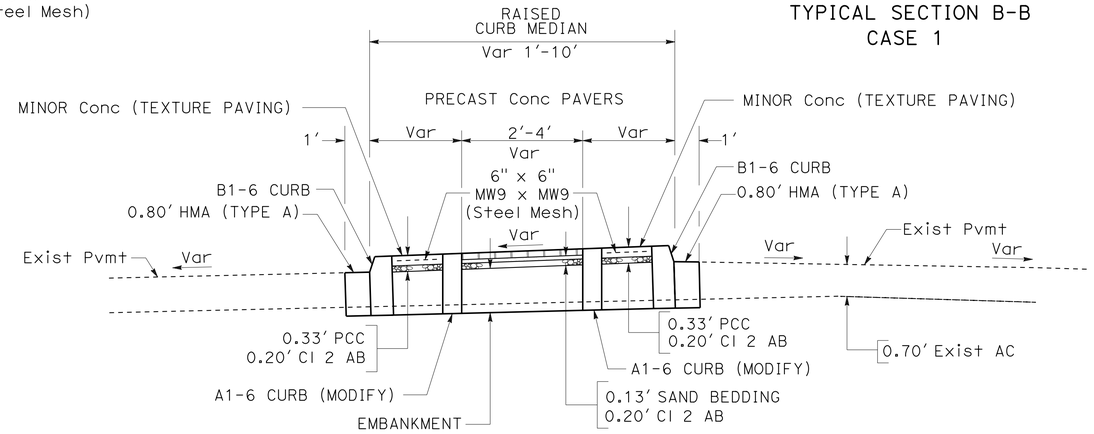

TYPICAL SECTION A-A
CASE 1

MINOR CONCRETE (TEXTURE PAVING)
STA 103+47.10 TO 106+90.20
STA 108+90.56 TO 111+67.38
STA 115+11.43 TO 120+12.86
STA 121+67.59 TO 124+10.86
STA 129+08.41 TO 136+97.42
STA 140+62.97 TO 143+54.80
STA 145+09.82 TO 150+05.51

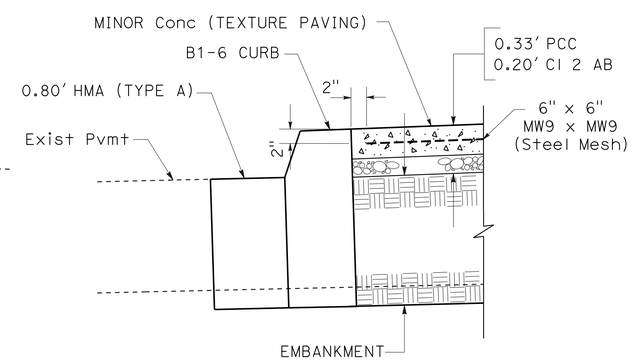

SECTION C-C

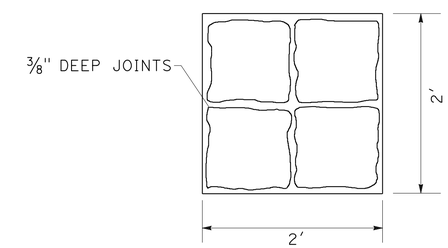

PLAN
MINOR CONCRETE
(TEXTURE PAVING)

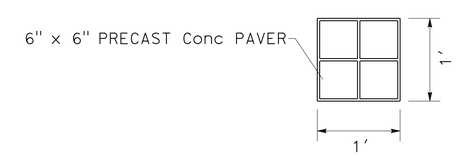

PLAN
PRECAST CONCRETE PAVER PATTERN

CONSTRUCTION DETAILS

NO SCALE

C-15

MINOR CONCRETE (TEXTURE PAVING) / PRECAST CONCRETE PAVERS

REVISED BY	DATE REVISED

CALCULATED-DESIGNED BY	CHECKED BY
SHAKILA HANIF	ELLERY ELLIS

FUNCTIONAL SUPERVISOR: ARTHUR RAMIREZ

STATE OF CALIFORNIA - DEPARTMENT OF TRANSPORTATION
Caltrans®
DESIGN

LAST REVISION 05-22-14 | DATE PLOTTED => 20-AUG-2014 | TIME PLOTTED => 10:30

Dist	COUNTY	ROUTE	POST MILES TOTAL PROJECT	SHEET No.	TOTAL SHEETS
06	Ker	178	100.6/102.7	18	54

REGISTERED CIVIL ENGINEER 05-01-14 DATE

6-23-14
PLANS APPROVAL DATE

REGISTERED PROFESSIONAL ENGINEER ELLERY B. ELLIS No. 62592 Exp. 06-30-16 CIVIL STATE OF CALIFORNIA

THE STATE OF CALIFORNIA OR ITS OFFICERS OR AGENTS SHALL NOT BE RESPONSIBLE FOR THE ACCURACY OR COMPLETENESS OF SCANNED COPIES OF THIS PLAN SHEET.

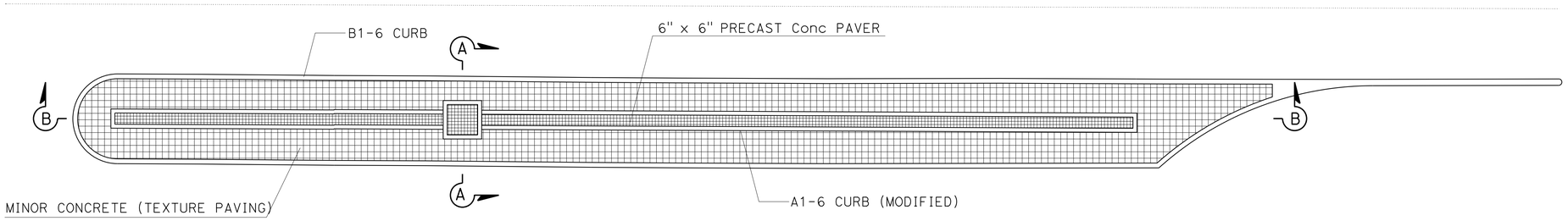

PLAN

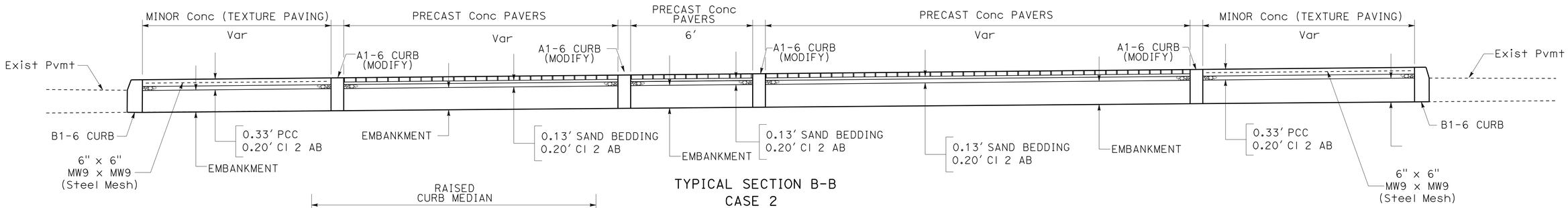

TYPICAL SECTION B-B
CASE 2

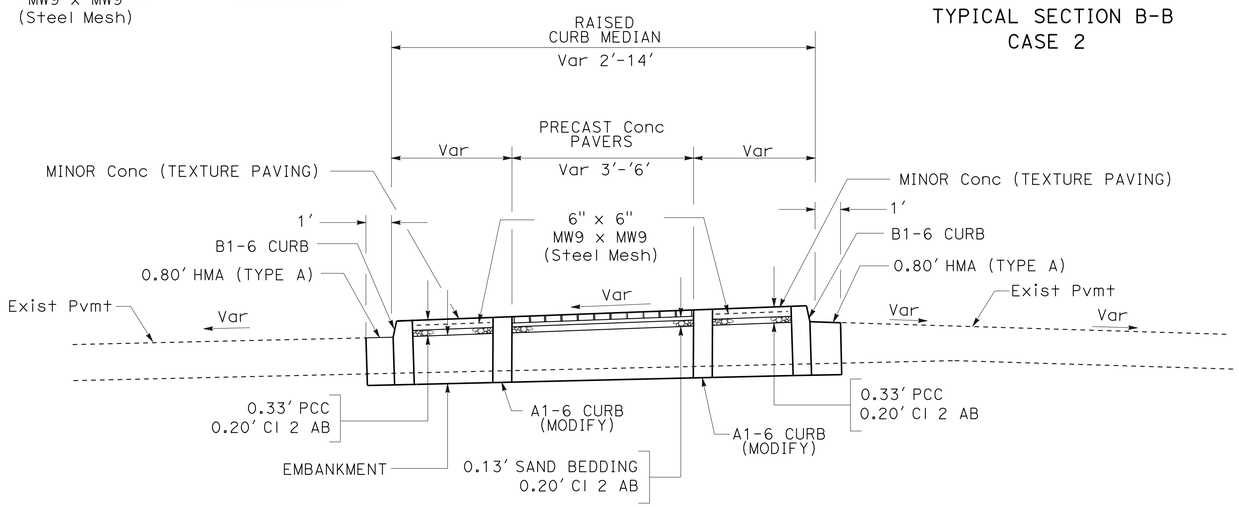

TYPICAL SECTION A-A
CASE 2

MINOR CONCRETE (TEXTURE PAVING)
STA 156+06.42 TO 160+16.11
STA 163+34.17 TO 164+71.32
STA 169+30.01 TO 172+56.90
STA 173+97.03 TO 176+66.43
STA 182+53.50 TO 184+14.63
STA 188+58.42 TO 192+97.68
STA 194+72.46 TO 195+65.59

MINOR CONCRETE (TEXTURE PAVING)/PRECAST CONCRETE PAVERS

CONSTRUCTION DETAILS

NO SCALE

C-16

REVISED BY | DATE REVISED
SHAKILA HANIF | ELLERY ELLIS
CALCULATED-DESIGNED BY | CHECKED BY
FUNCTIONAL SUPERVISOR | ART RAMIREZ
STATE OF CALIFORNIA - DEPARTMENT OF TRANSPORTATION
Caltrans
DESIGN

LAST REVISION 05-22-14 | DATE PLOTTED => 20-AUG-2014 TIME PLOTTED => 10:30

Dist	COUNTY	ROUTE	POST MILES TOTAL PROJECT	SHEET No.	TOTAL SHEETS
06	Ker	178	100.6/102.7	19	54

REGISTERED CIVIL ENGINEER DATE 05-01-14

6-23-14
PLANS APPROVAL DATE

REGISTERED PROFESSIONAL ENGINEER ELLERY B. ELLIS No. 62592 Exp. 06-30-16 CIVIL STATE OF CALIFORNIA

THE STATE OF CALIFORNIA OR ITS OFFICERS OR AGENTS SHALL NOT BE RESPONSIBLE FOR THE ACCURACY OR COMPLETENESS OF SCANNED COPIES OF THIS PLAN SHEET.

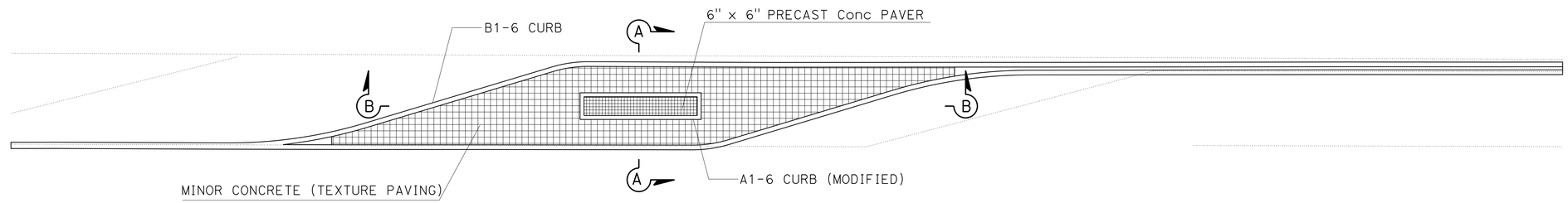

PLAN

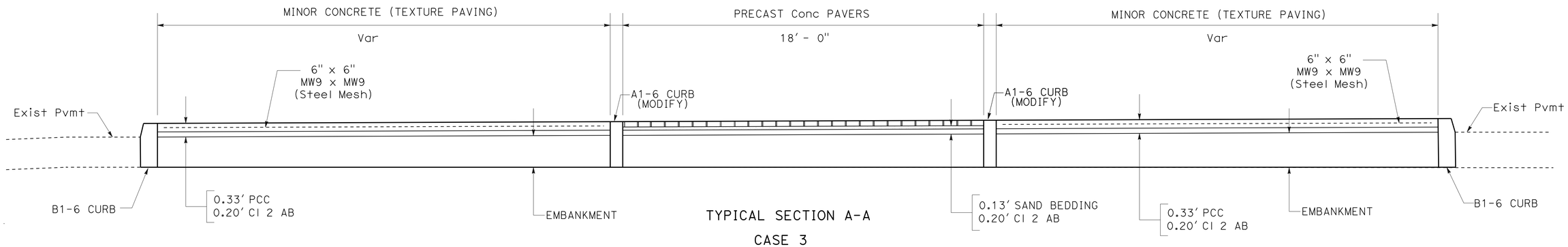

TYPICAL SECTION A-A

CASE 3

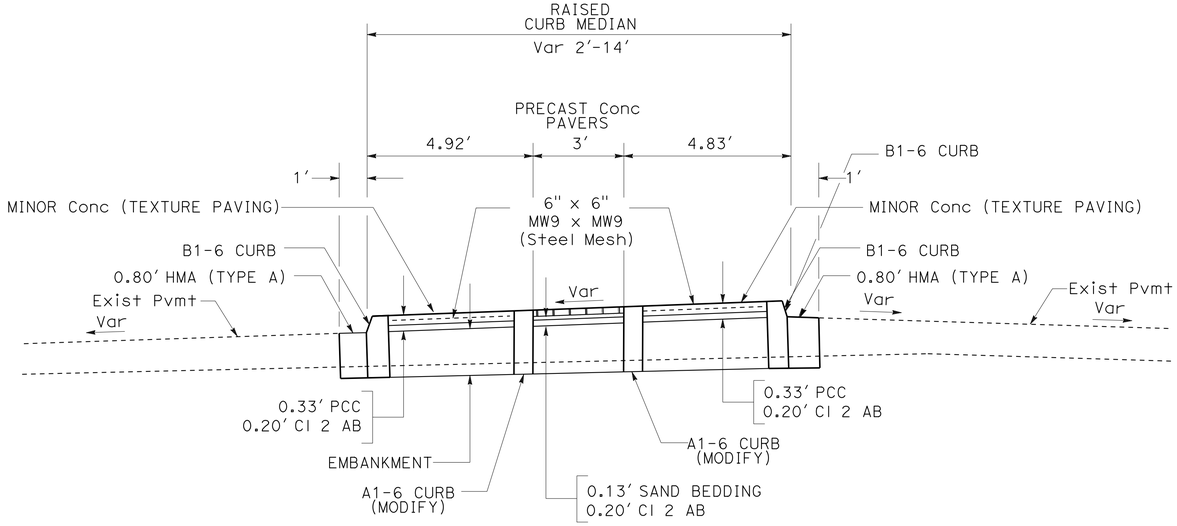

TYPICAL SECTION A-A

CASE 3

MINOR CONCRETE (TEXTURE PAVING)

STA 201+36.40 TO 202+87.43

STA 208+24.81 TO 209+19.36

MINOR CONCRETE (TEXTURE PAVING)/PRECAST CONCRETE PAVERS

CONSTRUCTION DETAILS

NO SCALE

C-17

STATE OF CALIFORNIA - DEPARTMENT OF TRANSPORTATION

Caltrans

DESIGN

FUNCTIONAL SUPERVISOR: ARTHUR RAMIREZ

CALCULATED-DESIGNED BY: SHAKILA HANIF

CHECKED BY: ELLERY ELLIS

REVISED BY

DATE REVISED

LAST REVISION 05-20-14 | DATE PLOTTED => 20-AUG-2014 | TIME PLOTTED => 10:30

Dist	COUNTY	ROUTE	POST MILES TOTAL PROJECT	SHEET No.	TOTAL SHEETS
06	Ker	178	100.6/102.7	20	54

REGISTERED CIVIL ENGINEER 6-19-14 DATE

6-23-14
PLANS APPROVAL DATE

REGISTERED PROFESSIONAL ENGINEER SUKHJINDER SINGH No. 81061 Exp. 9-30-15 CIVIL STATE OF CALIFORNIA

THE STATE OF CALIFORNIA OR ITS OFFICERS OR AGENTS SHALL NOT BE RESPONSIBLE FOR THE ACCURACY OR COMPLETENESS OF SCANNED COPIES OF THIS PLAN SHEET.

NOTE:

1. FOR ACCURATE RIGHT OF WAY DATA, CONTACT RIGHT OF WAY ENGINEERING AT THE DISTRICT OFFICE.
2. LOCATION OF UTILITIES FACILITIES SHOWN ON THESE PLANS ARE APPROXIMATE AND SHALL BE VERIFIED PRIOR TO CONSTRUCTION.
3. UTILITY OWNERSHIP ON THIS PROJECT:
   GAS - PACIFIC GAS & ELECTRIC
   ELECTRIC - SOUTHERN CALIFORNIA EDISION
   FIBER OPTICS - VERIZON & CALIFORNIA BROAD BAND COMPANY
   WATER - INDIAN WELLS WATER DISTRICT
   TELEPHONE - CALIFORNIA INTERSTATE TELEPHONE COMPANY
   SEWER & STROM DRAIN - CITY OF RIDGECREST
   WATER - RIDGECREST COUNTY WATER DISTRICT
4. ALL UTILITIES SHOWN ARE EXISTING UTILITIES.
5. DEPTH SHOWN IN THE TABLE ARE MEASURED FROM ORIGINAL GROUND.

ABBREVIATIONS:

PG&E - PACIFIC GAS & ELECTRIC
SCE - SOUTHERN CALIFORNIA EDISION
IWWD - INDIAN WELLS WATER DISTRICT
CBBC - CALIFORNIA BROAD BAND COMPANY

LEGENDS:

- UNDERGROUND ELECTRIC LINE
- OVERHEAD ELECTRIC LINE
- UNDERGROUND GAS LINE
- UNDERGROUND WATER LINE
- UNDERGROUND FIBER OPTIC LINE
- UNDERGROUND STORM DRAIN
- UNDERGROUND SEWER LINE
- UNDERGROUND TELEPHONE LINE
- LIGHT POLE
- SEWER MANHOLE
- WATER VALVE
- FIRE HYDRANT
- POTHOLE LOCATION
- POTHOLE LOCATION NUMBER

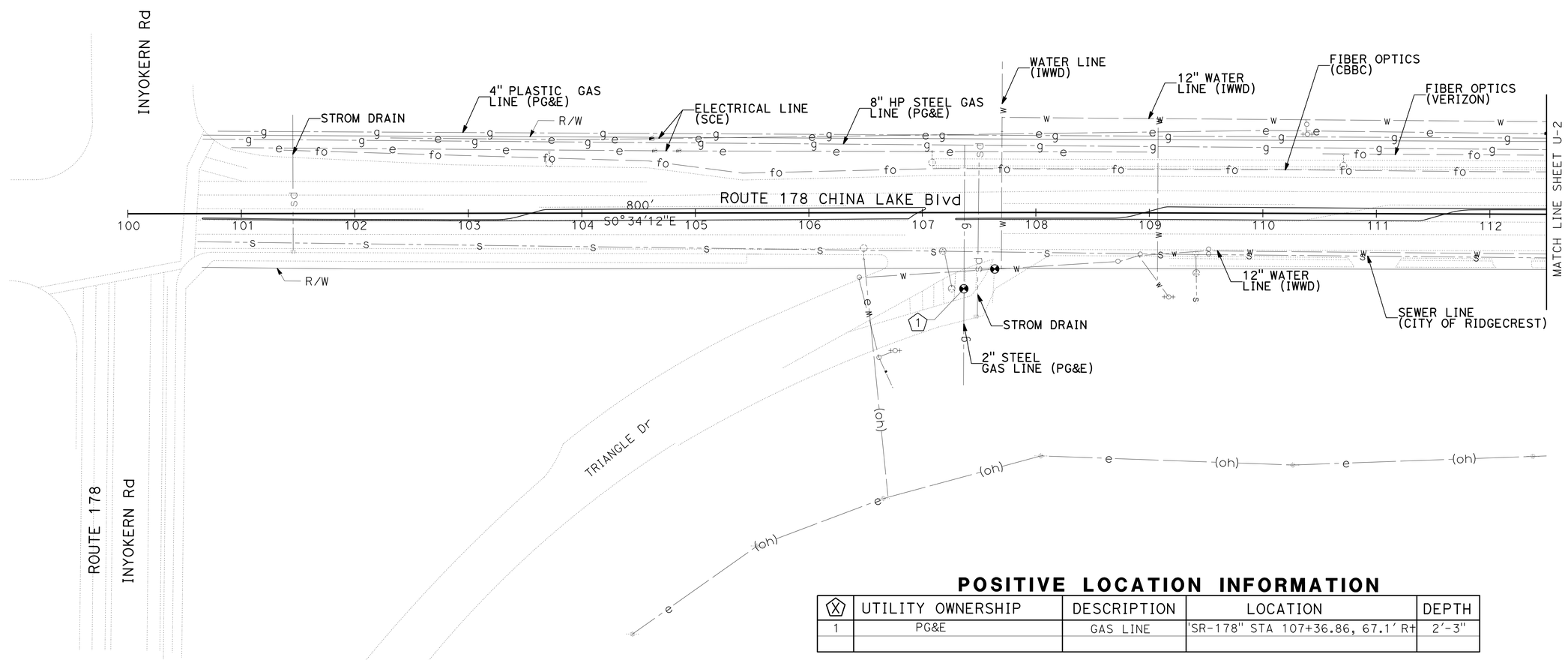

POSITIVE LOCATION INFORMATION

X	UTILITY OWNERSHIP	DESCRIPTION	LOCATION	DEPTH
1	PG&E	GAS LINE	'SR-178" STA 107+36.86, 67.1' R+	2'-3"

APPROVED FOR UTILITY INFORMATION ONLY

UTILITY PLAN

SCALE:1"=50'

U-1

STATE OF CALIFORNIA - DEPARTMENT OF TRANSPORTATION
Caltrans
DESIGN

FUNCTIONAL SUPERVISOR: ERNIE PENUNA
CALCULATED-DESIGNED BY: SUKHJINDER SINGH
CHECKED BY: ERNIE PENUNA
REVISED BY
DATE REVISED

LAST REVISION 06-19-14
DATE PLOTTED => 20-AUG-2014
TIME PLOTTED => 10:30

Dist	COUNTY	ROUTE	POST MILES TOTAL PROJECT	SHEET No.	TOTAL SHEETS
06	Ker	178	100.6/102.7	21	54

REGISTERED CIVIL ENGINEER 6-19-14 DATE

6-23-14
PLANS APPROVAL DATE

REGISTERED PROFESSIONAL ENGINEER SUKHJINDER SINGH No. 81061 Exp. 9-30-15 CIVIL STATE OF CALIFORNIA

THE STATE OF CALIFORNIA OR ITS OFFICERS OR AGENTS SHALL NOT BE RESPONSIBLE FOR THE ACCURACY OR COMPLETENESS OF SCANNED COPIES OF THIS PLAN SHEET.

NOTE:

1. FOR ACCURATE RIGHT OF WAY DATA, CONTACT RIGHT OF WAY ENGINEERING AT THE DISTRICT OFFICE.

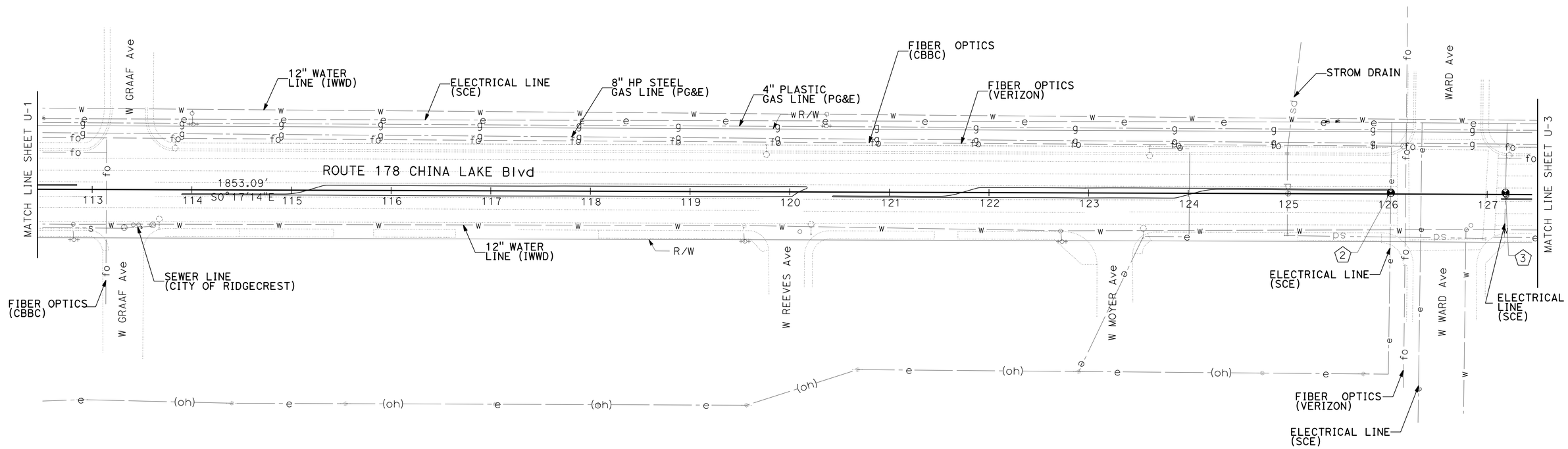

POSITIVE LOCATION INFORMATION

(X)	UTILITY OWNERSHIP	DESCRIPTION	LOCATION	DEPTH
2	SOUTHERN CALIFONIA EDISON	ELECTRIC LINE	"SR-178" STA 126+02.7, 1.2' L+	3'-10"
3	SOUTHERN CALIFONIA EDISON	ELECTRIC LINE	"SR-178" STA 127+18.4, 1.7' L+	4'-6"

APPROVED FOR UTILITY INFORMATION ONLY

UTILITY PLAN

SCALE:1"=50' **U-2**

STATE OF CALIFORNIA - DEPARTMENT OF TRANSPORTATION
Caltrans
DESIGN

FUNCTIONAL SUPERVISOR: ERNIE PENUNA
CALCULATED-DESIGNED BY: SUKHJINDER SINGH
CHECKED BY: ERNIE PENUNA
REVISED BY
DATE REVISED

LAST REVISION 06-19-14
DATE PLOTTED => 20-AUG-2014
TIME PLOTTED => 10:30

Dist	COUNTY	ROUTE	POST MILES TOTAL PROJECT	SHEET No.	TOTAL SHEETS
06	Ker	178	100.6/102.7	22	54

REGISTERED CIVIL ENGINEER 6-19-14 DATE

6-23-14
PLANS APPROVAL DATE

REGISTERED PROFESSIONAL ENGINEER SUKHJINDER SINGH No. 81061 Exp. 9-30-15 CIVIL STATE OF CALIFORNIA

THE STATE OF CALIFORNIA OR ITS OFFICERS OR AGENTS SHALL NOT BE RESPONSIBLE FOR THE ACCURACY OR COMPLETENESS OF SCANNED COPIES OF THIS PLAN SHEET.

NOTE:

1. FOR ACCURATE RIGHT OF WAY DATA, CONTACT RIGHT OF WAY ENGINEERING AT THE DISTRICT OFFICE.

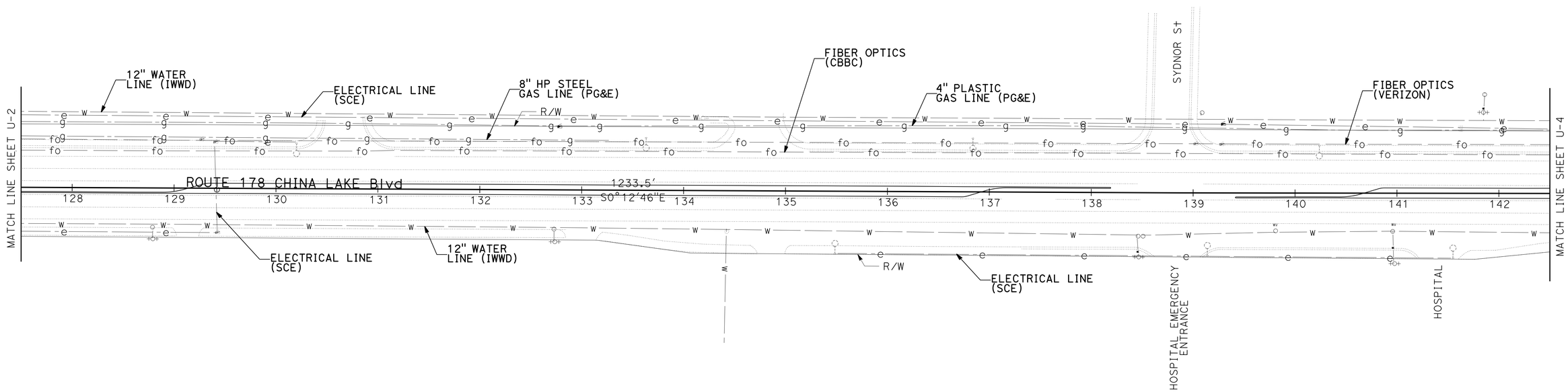

APPROVED FOR UTILITY INFORMATION ONLY

UTILITY PLAN

SCALE:1"=50' **U-3**

STATE OF CALIFORNIA - DEPARTMENT OF TRANSPORTATION
Caltrans® DESIGN

FUNCTIONAL SUPERVISOR: ERNIE PENUNA
CALCULATED-DESIGNED BY: SUKHJINDER SINGH
CHECKED BY: ERNIE PENUNA
REVISED BY
DATE REVISED

LAST REVISION 06-19-14
DATE PLOTTED => 20-AUG-2014
TIME PLOTTED => 10:30

Dist	COUNTY	ROUTE	POST MILES TOTAL PROJECT	SHEET No.	TOTAL SHEETS
06	Ker	178	100.6/102.7	23	54

REGISTERED CIVIL ENGINEER 6-19-14 DATE

6-23-14
PLANS APPROVAL DATE

REGISTERED PROFESSIONAL ENGINEER SUKHJINDER SINGH No. 81061 Exp. 9-30-15 CIVIL STATE OF CALIFORNIA

THE STATE OF CALIFORNIA OR ITS OFFICERS OR AGENTS SHALL NOT BE RESPONSIBLE FOR THE ACCURACY OR COMPLETENESS OF SCANNED COPIES OF THIS PLAN SHEET.

NOTE:

1. FOR ACCURATE RIGHT OF WAY DATA, CONTACT RIGHT OF WAY ENGINEERING AT THE DISTRICT OFFICE.

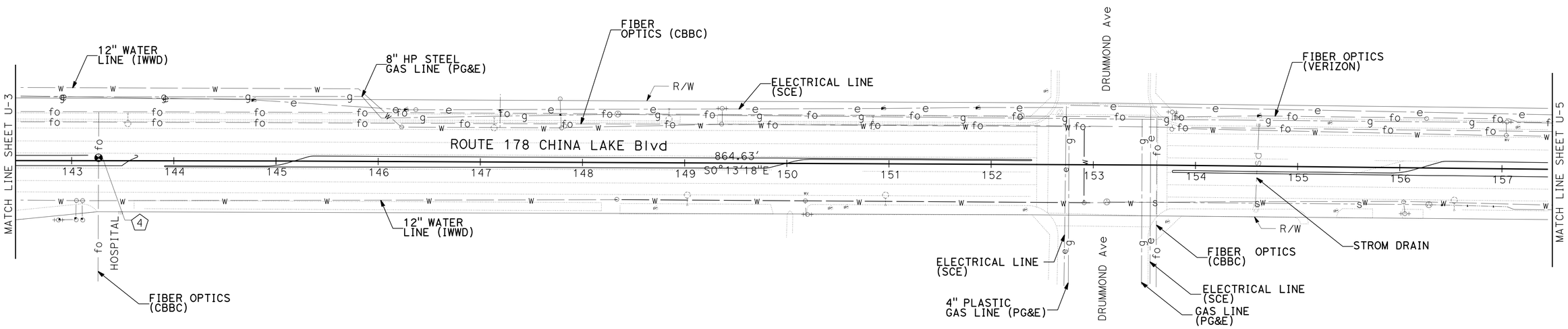

POSITIVE LOCATION INFORMATION

⊗	UTILITY OWNERSHIP	DESCRIPTION	LOCATION	DEPTH
4	CALIFORNIA BROAD BAND COMPANY	FIBER OPTIC	"SR-178" STA 143+26.33, 2.83 Lt	5'-0"

APPROVED FOR UTILITY INFORMATION ONLY

UTILITY PLAN

SCALE:1"=50' **U-4**

STATE OF CALIFORNIA - DEPARTMENT OF TRANSPORTATION
Caltrans® DESIGN

FUNCTIONAL SUPERVISOR: ERNIE PENUNA
CALCULATED-DESIGNED BY: SUKHJINDER SINGH
CHECKED BY: ERNIE PENUNA
REVISED BY
DATE REVISED

LAST REVISION 06-19-14
DATE PLOTTED => 20-AUG-2014
TIME PLOTTED => 10:30

Dist	COUNTY	ROUTE	POST MILES TOTAL PROJECT	SHEET No.	TOTAL SHEETS
06	Ker	178	100.6/102.7	24	54

REGISTERED CIVIL ENGINEER 6-19-14 DATE

6-23-14
PLANS APPROVAL DATE

REGISTERED PROFESSIONAL ENGINEER SUKHJINDER SINGH No. 81061 Exp. 9-30-15 CIVIL STATE OF CALIFORNIA

THE STATE OF CALIFORNIA OR ITS OFFICERS OR AGENTS SHALL NOT BE RESPONSIBLE FOR THE ACCURACY OR COMPLETENESS OF SCANNED COPIES OF THIS PLAN SHEET.

NOTE:

1. FOR ACCURATE RIGHT OF WAY DATA, CONTACT RIGHT OF WAY ENGINEERING AT THE DISTRICT OFFICE.

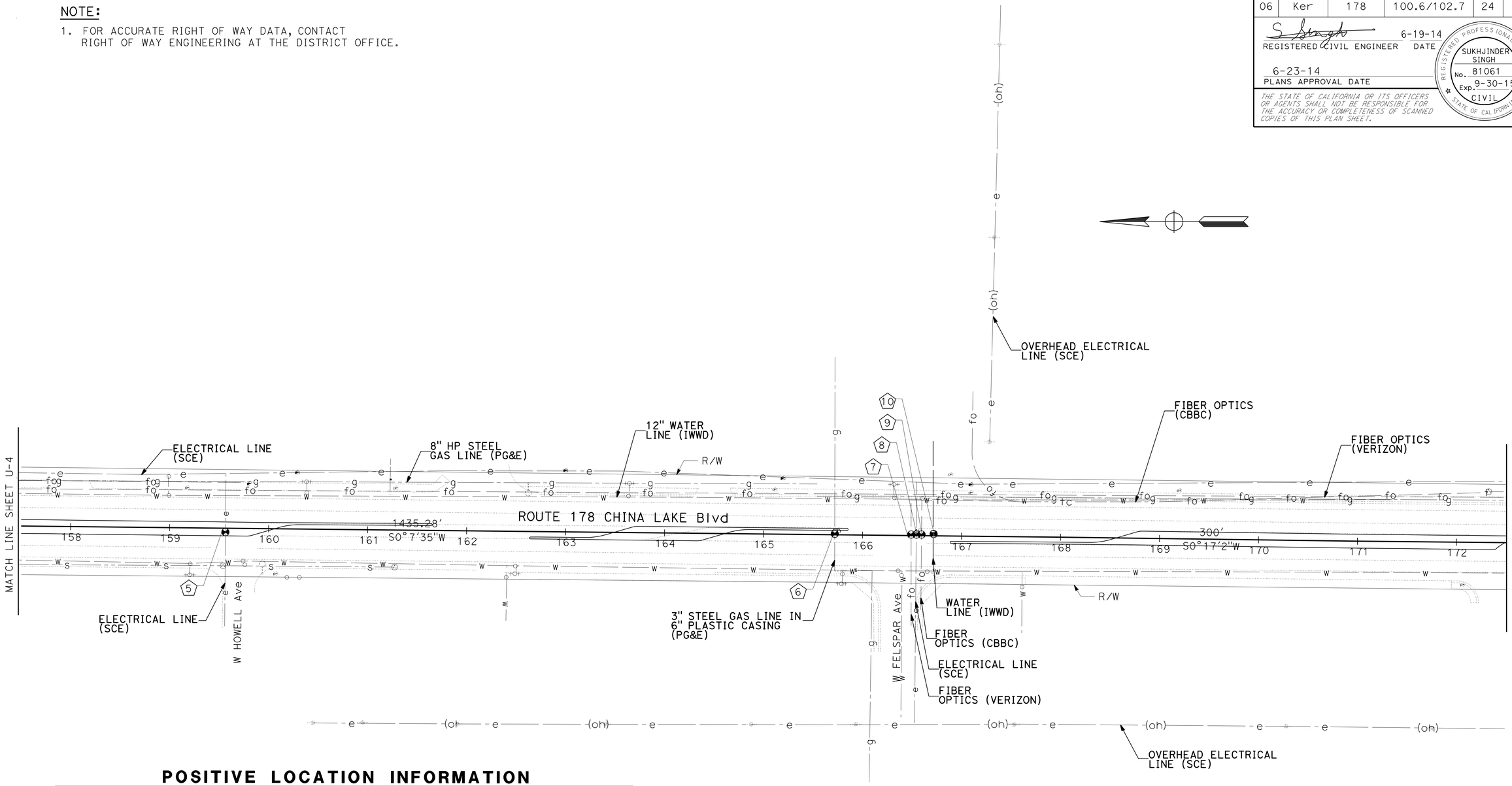

POSITIVE LOCATION INFORMATION

(X)	UTILITY OWNERSHIP	DESCRIPTION	LOCATION	DEPTH
5	SOUTHERN CALIFONIA EDISON	ELECTRIC LINE	"SR-178" STA 159+56.5, 3.9' R+	3'-10"
6	PG&E	GAS	"SR-178" STA 165+72.2, 1.0' L+	5'-4"
7	VERIZON	FIBER OPTIC	"SR-178" STA 166+49.3, 1.0' L+	3'-8"
8	SOUTHERN CALIFONIA EDISON	ELECTRIC LINE	"SR-178" STA 166+54.2, 1.0' L+	4'-9"
9	CBBC	FIBER OPTIC	"SR-178" STA 166+59.6, 1.0' L+	> 6'-0"
10	IWWD	WATER LINE	"SR-178" STA 166+71.8, 1.0' L+	3'-0"

APPROVED FOR UTILITY INFORMATION ONLY

UTILITY PLAN

SCALE:1"=50' **U-5**

REVISED BY	DATE REVISED

CALCULATED-DESIGNED BY: SUKHJINDER SINGH
CHECKED BY: ERNIE PENUNA
FUNCTIONAL SUPERVISOR: ERNIE PENUNA

STATE OF CALIFORNIA - DEPARTMENT OF TRANSPORTATION
Caltrans
DESIGN

LAST REVISION 06-19-14
DATE PLOTTED => 20-AUG-2014
TIME PLOTTED => 10:31

Dist	COUNTY	ROUTE	POST MILES TOTAL PROJECT	SHEET No.	TOTAL SHEETS
06	Ker	178	100.6/102.7	25	54

REGISTERED CIVIL ENGINEER 6-19-14 DATE

6-23-14
PLANS APPROVAL DATE

REGISTERED PROFESSIONAL ENGINEER SUKHJINDER SINGH No. 81061 Exp. 9-30-15 CIVIL STATE OF CALIFORNIA

THE STATE OF CALIFORNIA OR ITS OFFICERS OR AGENTS SHALL NOT BE RESPONSIBLE FOR THE ACCURACY OR COMPLETENESS OF SCANNED COPIES OF THIS PLAN SHEET.

NOTE:

1. FOR ACCURATE RIGHT OF WAY DATA, CONTACT RIGHT OF WAY ENGINEERING AT THE DISTRICT OFFICE.

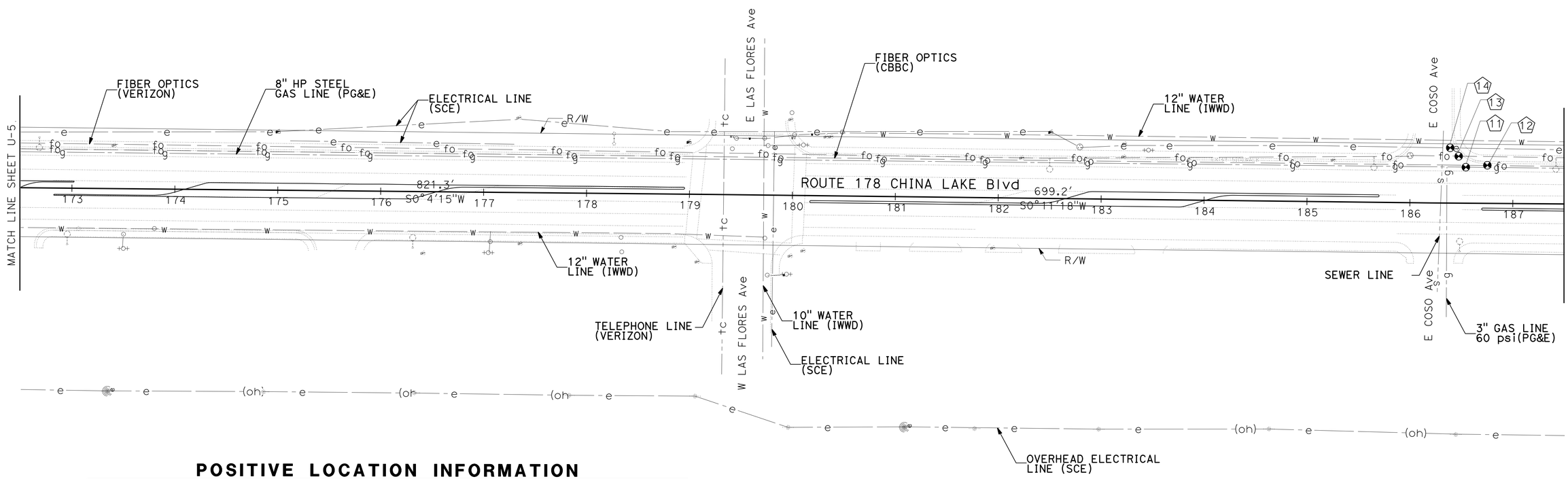

POSITIVE LOCATION INFORMATION

⊗	UTILITY OWNERSHIP	DESCRIPTION	LOCATION	DEPTH
11	PG&E	GAS	"SR-178" STA 186+53.9, 34.9 Lt	4'-7"
12	CBBC	FIBER OPTIC	"SR-178" STA 186+74.8, 37.0' Lt	6'-0"
13	VERIZON	FIBER OPTIC	"SR-178" STA 186+47.0, 45.7' Lt	4'-2"
14	SOUTHERN CALIFONIA EDISON	ELECTRIC LINE	"SR-178" STA 186+38.5, 53.9' Lt	* 0'-10"

* PIPE IN SLURRY. DEPTH SHOWN IS TO THE TOP OF SLURRY.

APPROVED FOR UTILITY INFORMATION ONLY

UTILITY PLAN

SCALE:1"=50' **U-6**

STATE OF CALIFORNIA - DEPARTMENT OF TRANSPORTATION
Caltrans
DESIGN

FUNCTIONAL SUPERVISOR: ERNIE PENUNA
CALCULATED-DESIGNED BY: SUKHJINDER SINGH
CHECKED BY: ERNIE PENUNA
REVISED BY
DATE REVISED

LAST REVISION 06-19-14
DATE PLOTTED => 20-AUG-2014
TIME PLOTTED => 10:31

Dist	COUNTY	ROUTE	POST MILES TOTAL PROJECT	SHEET No.	TOTAL SHEETS
06	Ker	178	100.6/102.7	26	54

REGISTERED CIVIL ENGINEER 6-19-14 DATE

6-23-14
PLANS APPROVAL DATE

REGISTERED PROFESSIONAL ENGINEER SUKHJINDER SINGH No. 81061 Exp. 9-30-15 CIVIL STATE OF CALIFORNIA

THE STATE OF CALIFORNIA OR ITS OFFICERS OR AGENTS SHALL NOT BE RESPONSIBLE FOR THE ACCURACY OR COMPLETENESS OF SCANNED COPIES OF THIS PLAN SHEET.

NOTE:

1. FOR ACCURATE RIGHT OF WAY DATA, CONTACT RIGHT OF WAY ENGINEERING AT THE DISTRICT OFFICE.

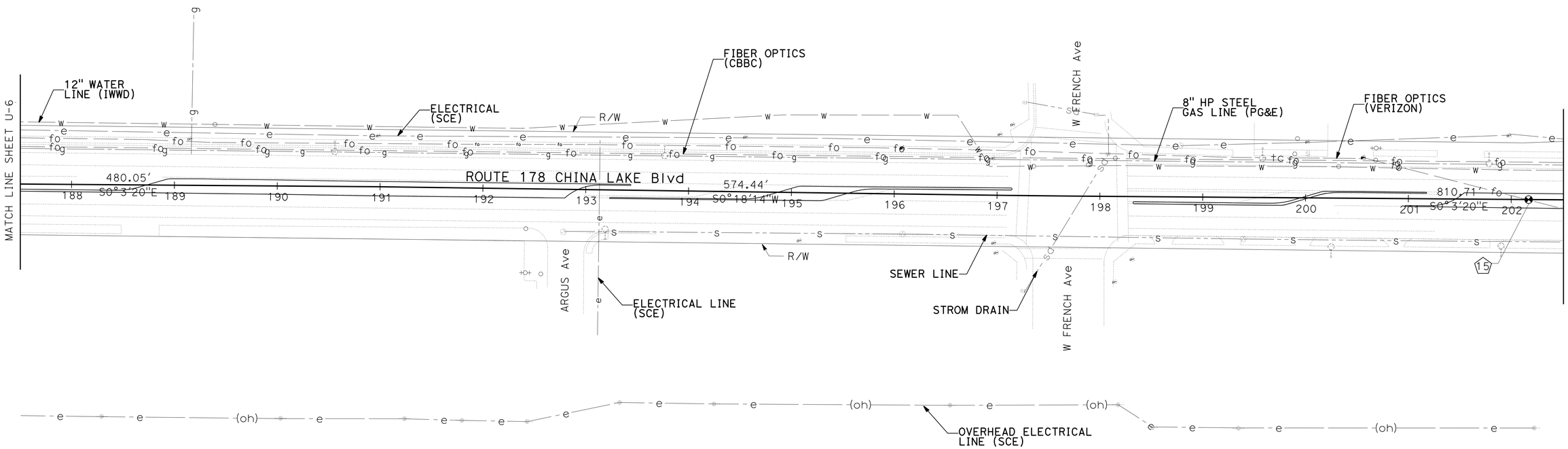

POSITIVE LOCATION INFORMATION

(X)	UTILITY OWNERSHIP	DESCRIPTION	LOCATION	DEPTH
15	VERIZON	FIBER OPTIC	"SR-178" STA 202+17.1, 0.0'	5'-1"

APPROVED FOR UTILITY INFORMATION ONLY

UTILITY PLAN

SCALE:1"=50' **U-7**

REVISED BY	DATE REVISED

CALCULATED-DESIGNED BY: SUKHJINDER SINGH
CHECKED BY: ERNIE PENUNA
FUNCTIONAL SUPERVISOR: ERNIE PENUNA

STATE OF CALIFORNIA - DEPARTMENT OF TRANSPORTATION
Caltrans
DESIGN

LAST REVISION 06-19-14
DATE PLOTTED => 20-AUG-2014
TIME PLOTTED => 10:31

Dist	COUNTY	ROUTE	POST MILES TOTAL PROJECT	SHEET No.	TOTAL SHEETS
06	Ker	178	100.6/102.7	27	54

REGISTERED CIVIL ENGINEER 6-19-14 DATE

6-23-14
PLANS APPROVAL DATE

REGISTERED PROFESSIONAL ENGINEER SUKHJINDER SINGH No. 81061 Exp. 9-30-15 CIVIL STATE OF CALIFORNIA

THE STATE OF CALIFORNIA OR ITS OFFICERS OR AGENTS SHALL NOT BE RESPONSIBLE FOR THE ACCURACY OR COMPLETENESS OF SCANNED COPIES OF THIS PLAN SHEET.

NOTE:

1. FOR ACCURATE RIGHT OF WAY DATA, CONTACT RIGHT OF WAY ENGINEERING AT THE DISTRICT OFFICE.

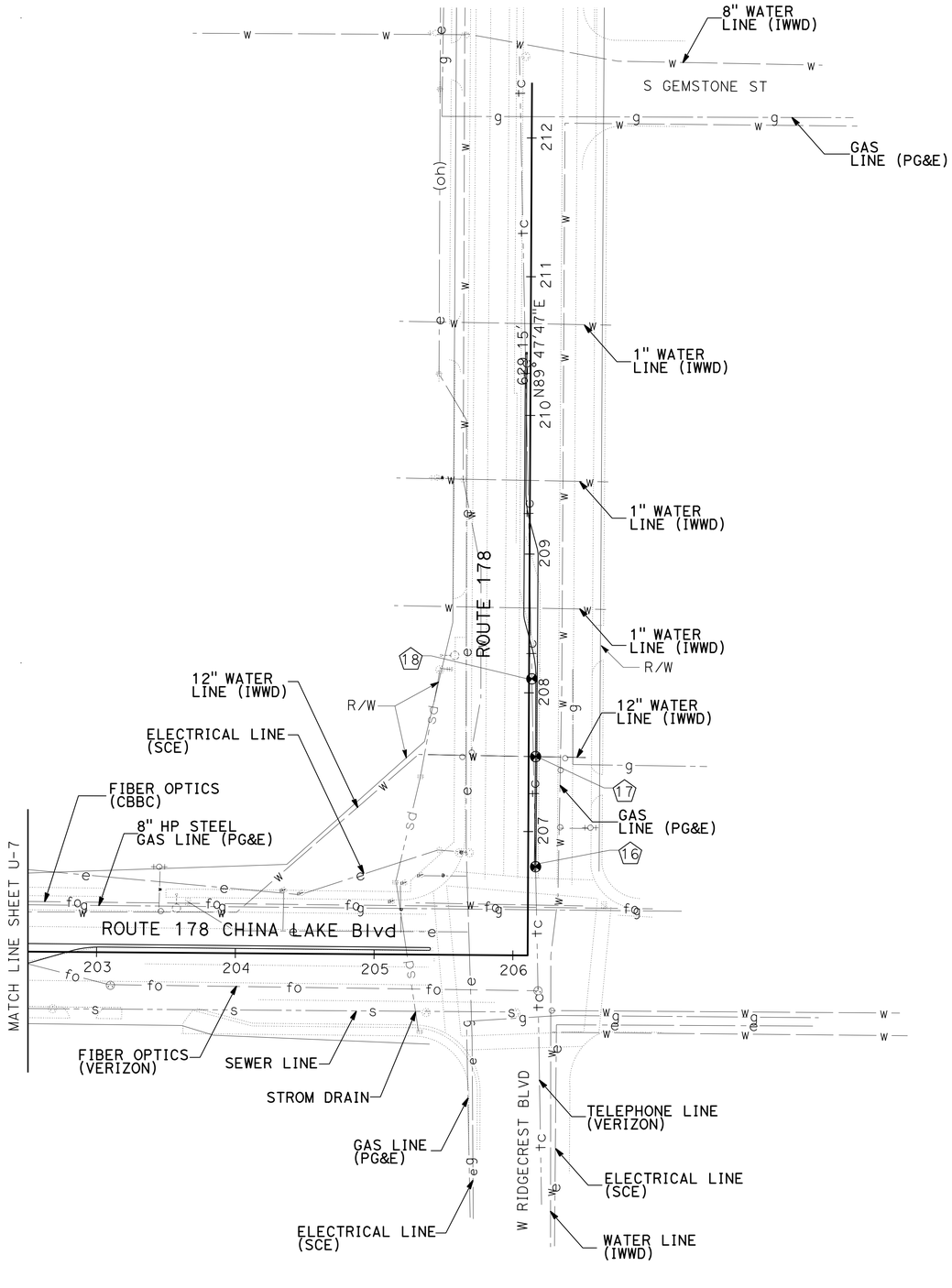

POSITIVE LOCATION INFORMATION

(X)	UTILITY OWNERSHIP	DESCRIPTION	LOCATION	DEPTH
16	VERIZON	TELEPHONE LINE	"SR-178" STA 206+74.7, 5.4' R†	3'-6"
17	IWWD	WATER LINE	"SR-178" STA 207+54.1, 5.0' L†	* 0'-8"
18	VERIZON	TELEPHONE LINE	"SR-178" STA 208+10.1, 2.1' R†	3'-6"

* PIPE IN SLURRY. DEPTH SHOWN IS TO THE TOP OF SLURRY.

APPROVED FOR UTILITY INFORMATION ONLY

UTILITY PLAN

SCALE:1"=50' **U-8**

STATE OF CALIFORNIA - DEPARTMENT OF TRANSPORTATION
Caltrans® DESIGN

FUNCTIONAL SUPERVISOR: ERNIE PENUNA
CALCULATED-DESIGNED BY: SUKHJINDER SINGH
CHECKED BY: ERNIE PENUNA
REVISED BY
DATE REVISED

LAST REVISION 06-19-14 | DATE PLOTTED => 20-AUG-2014 | TIME PLOTTED => 10:31

Dist	COUNTY	ROUTE	POST MILES TOTAL PROJECT	SHEET No.	TOTAL SHEETS
06	Ker	178	100.6/102.7	28	54

Lianne Talbot 6-17-14
REGISTERED CIVIL ENGINEER DATE

6-23-14
PLANS APPROVAL DATE

REGISTERED PROFESSIONAL ENGINEER LIANNE TALBOT No. 74599 Exp. 12-31-15 CIVIL STATE OF CALIFORNIA

THE STATE OF CALIFORNIA OR ITS OFFICERS OR AGENTS SHALL NOT BE RESPONSIBLE FOR THE ACCURACY OR COMPLETENESS OF SCANNED COPIES OF THIS PLAN SHEET.

NOTE:
EXACT LOCATION OF CONSTRUCTION AREA SIGNS TO BE DETERMINED BY THE ENGINEER.

LEGEND:

(X) - PLACEMENT TYPE

- CONSTRUCTION AREA SIGNS (ONE POST)

- PORTABLE FLASHING BEACON

STATIONARY MOUNTED CONSTRUCTION AREA SIGN

LAYOUT	SIGN CODE	PANEL SIZE	SIGN MESSAGE	No. OF SIGNS	No. OF POSTS	POST SIZE
A	W20-1	48" x 48"	ROAD WORK AHEAD	2	1	6" x 6"
B	W20-1	36" x 36"	ROAD WORK AHEAD	23	1	4" x 6"
C	G20-2	36" x 18"	END ROAD WORK	3	1	4" x 4"

PORTABLE FLASHING BEACON

4

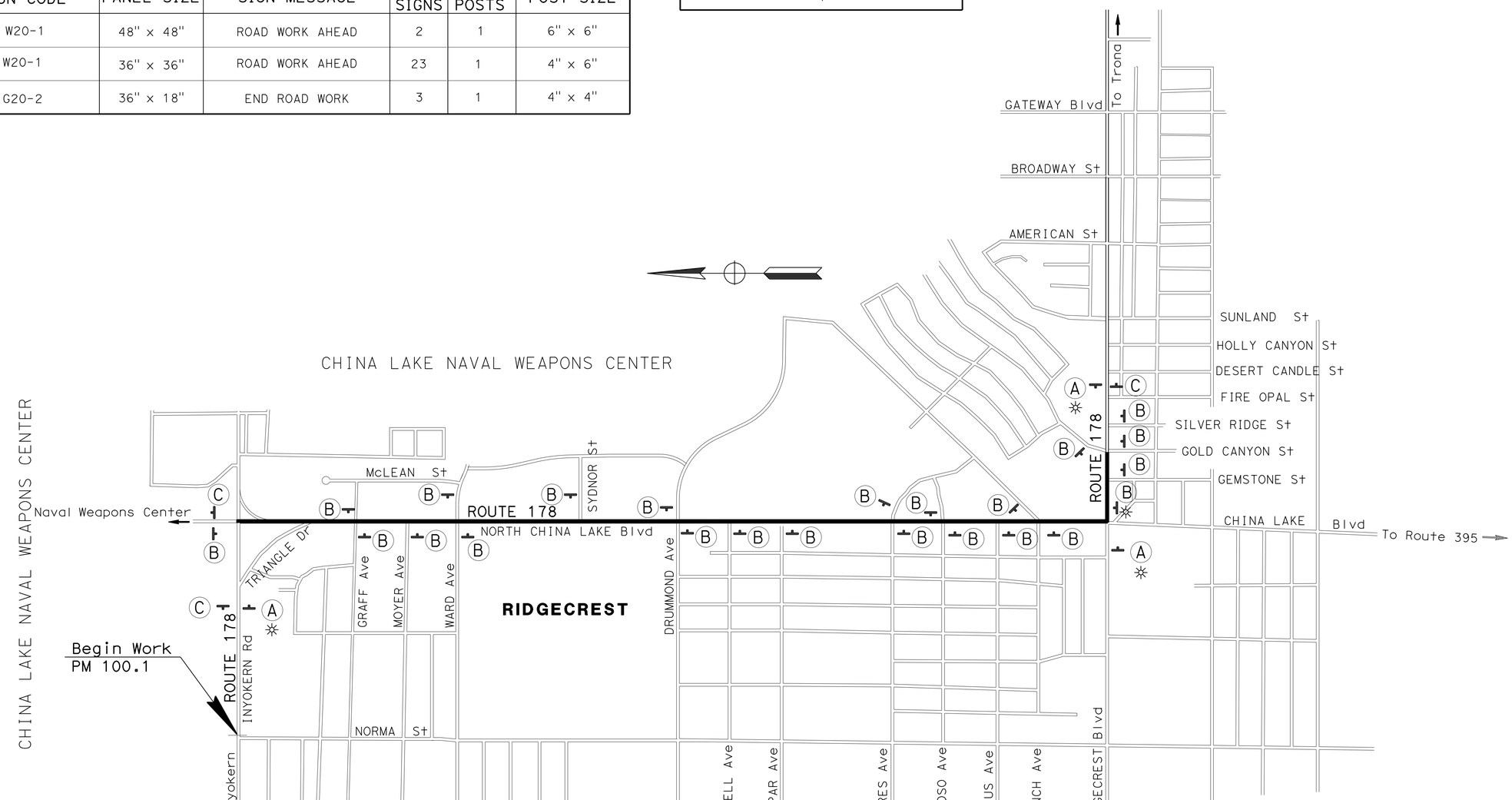

APPROVED FOR CONSTRUCTION AREA SIGN WORK ONLY

CONSTRUCTION AREA SIGNS

NO SCALE

CS-1

STATE OF CALIFORNIA - DEPARTMENT OF TRANSPORTATION
Caltrans TRAFFIC OPERATIONS

FUNCTIONAL SUPERVISOR: TERRY ERLWEIN
CALCULATED-DESIGNED BY: LIANNE TALBOT
CHECKED BY: DONNA HOLLAND
REVISED BY
DATE REVISED

LAST REVISION 06-17-14
DATE PLOTTED => 20-AUG-2014
TIME PLOTTED => 10:31

Dist	COUNTY	ROUTE	POST MILES TOTAL PROJECT	SHEET No.	TOTAL SHEETS
06	Ker	178	100.6/102.7	29	54

REGISTERED CIVIL ENGINEER 05-01-14 DATE

6-23-14
PLANS APPROVAL DATE

REGISTERED PROFESSIONAL ENGINEER ELLERY B. ELLIS No. 62592 Exp. 06-30-16 CIVIL STATE OF CALIFORNIA

THE STATE OF CALIFORNIA OR ITS OFFICERS OR AGENTS SHALL NOT BE RESPONSIBLE FOR THE ACCURACY OR COMPLETENESS OF SCANNED COPIES OF THIS PLAN SHEET.

NOTE:

FOR ACCURATE RIGHT OF WAY DATA, CONTACT RIGHT OF WAY ENGINEERING AT THE DISTRICT OFFICE.

LEGEND:

CONSTRUCTION AREA

STAGING NOTES:

STAGE 1: INYOKERN Rd TO MAIN HOSPITAL ENTRANCE, AND LAS FLORES Ave TO FRENCH Ave

SIGNALIZED INTERSECTION
LEFT TURNS EXCLUDED.

EMERGENCY HOSPITAL ACCESS OPEN
Sta 134+77, Sta 138+39 AND Sta 143+36 EXCLUDED

STAGE 2: HOSPITAL ENTRANCE TO LAS FLORES Ave AND FRENCH Ave TO GEMSTONE St

SIGNALIZED INTERSECTIONS LEFT TURNS EXCLUDED

STAGE 3: LEFT TURN POCKETS

NO TWO CONSECUTIVE INTERSECTIONS CLOSED AT THE SAME TIME

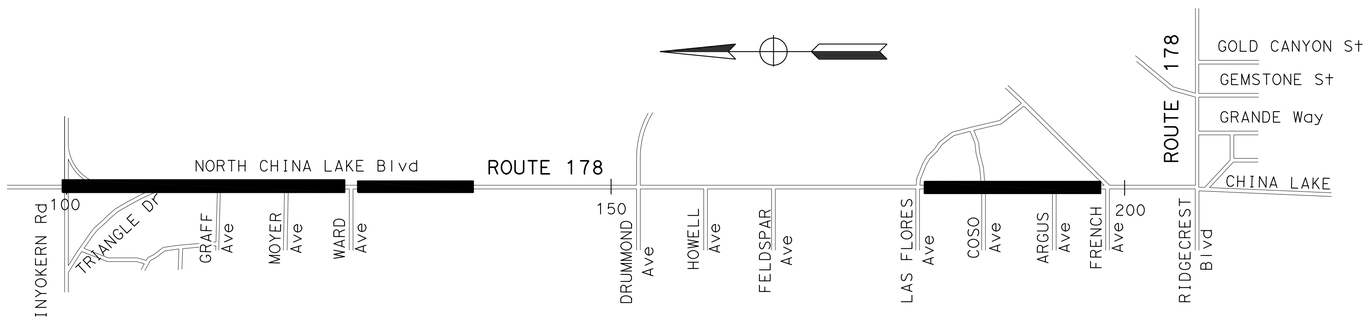

STAGE 1

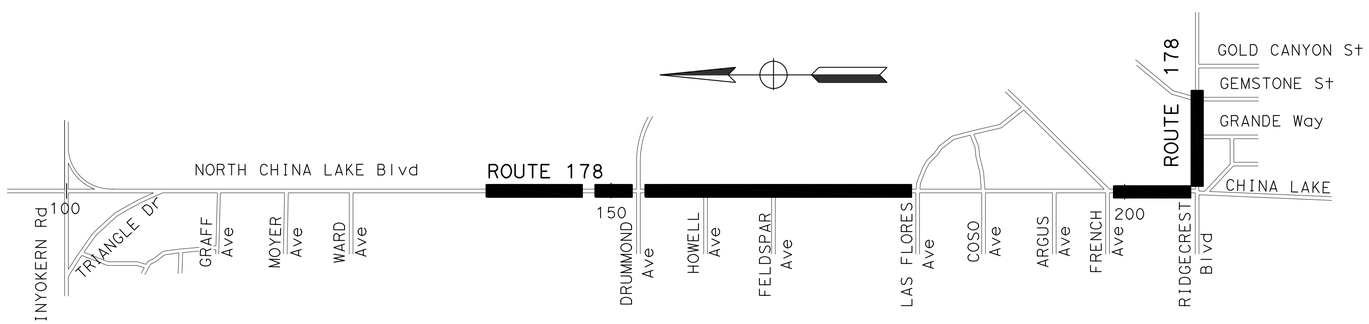

STAGE 2

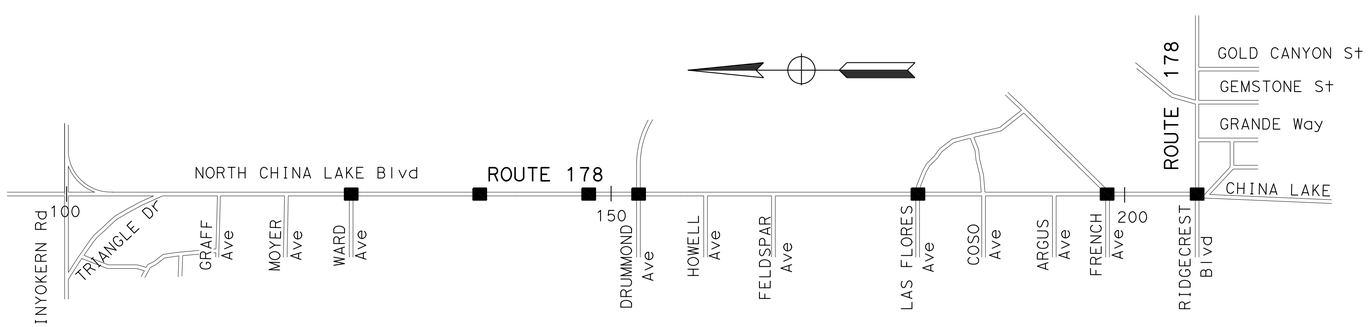

STAGE 3

APPROVED FOR STAGE CONSTRUCTION AND TRAFFIC HANDLING WORK ONLY

STAGE CONSTRUCTION
(STAGE 1, 2 AND 3)

NO SCALE

SC-1

STATE OF CALIFORNIA - DEPARTMENT OF TRANSPORTATION
Caltrans® DESIGN

FUNCTIONAL SUPERVISOR: ARTHUR RAMIREZ
CALCULATED-DESIGNED BY: SHAKILA HANIF
CHECKED BY: ELLERY ELLIS
REVISED BY
DATE REVISED

LAST REVISION 05-22-14
DATE PLOTTED => 20-AUG-2014
TIME PLOTTED => 10:31

Dist	COUNTY	ROUTE	POST MILES TOTAL PROJECT	SHEET No.	TOTAL SHEETS
06	Ker	178	100.6/102.7	30	54

REGISTERED CIVIL ENGINEER 6-17-14 DATE

6-23-14
PLANS APPROVAL DATE

REGISTERED PROFESSIONAL ENGINEER LIANNE TALBOT No. 74599 Exp. 12-31-15 CIVIL STATE OF CALIFORNIA

THE STATE OF CALIFORNIA OR ITS OFFICERS OR AGENTS SHALL NOT BE RESPONSIBLE FOR THE ACCURACY OR COMPLETENESS OF SCANNED COPIES OF THIS PLAN SHEET.

NOTE:

FOR ACCURATE RIGHT OF WAY DATA, CONTACT RIGHT OF WAY ENGINEERING AT THE DISTRICT OFFICE.

LEGEND:

- ∘ BEGIN/END OF TRAFFIC STRIPE DETAIL
- (XX) TRAFFIC STRIPE DETAIL NUMBER
- (X) ROADSIDE SIGN NUMBER
- RS (X) RESET ROADSIDE SIGN
- RM (X) REMOVE ROADSIDE SIGN
- RL (X) RELOCATE ROADSIDE SIGN
- TYPE III ARROW

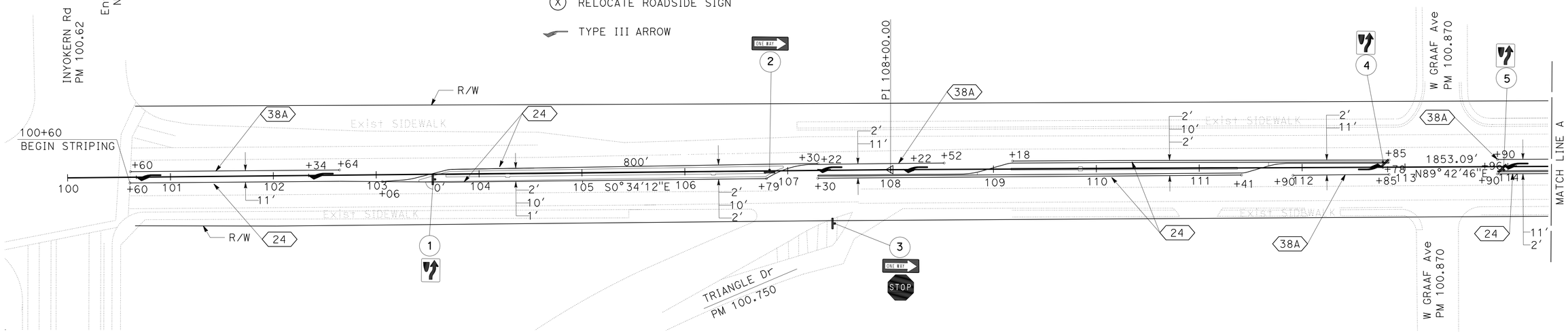

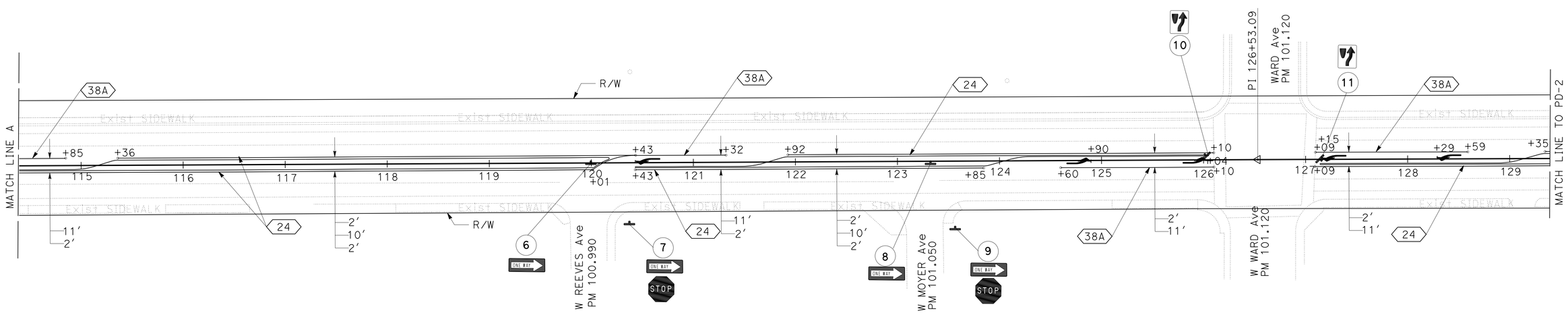

APPROVED FOR PAVEMENT DELINEATION AND SIGN WORK ONLY

PAVEMENT DELINEATION AND SIGN PLAN

SCALE: 1" = 50'

PD-1

STATE OF CALIFORNIA - DEPARTMENT OF TRANSPORTATION
Caltrans® TRAFFIC OPERATIONS

FUNCTIONAL SUPERVISOR: TERRY ERLWEIN
CALCULATED-DESIGNED BY: LIANNE TALBOT
CHECKED BY: DONNA HOLLAND
REVISED BY
DATE REVISED

LAST REVISION 06-17-14
DATE PLOTTED => 20-AUG-2014
TIME PLOTTED => 10:32

Dist	COUNTY	ROUTE	POST MILES TOTAL PROJECT	SHEET No.	TOTAL SHEETS
06	Ker	178	100.6/102.7	31	54

REGISTERED CIVIL ENGINEER 6-17-14 DATE

6-23-14
PLANS APPROVAL DATE

REGISTERED PROFESSIONAL ENGINEER LIANNE TALBOT No. 74599 Exp. 12-31-15 CIVIL STATE OF CALIFORNIA

THE STATE OF CALIFORNIA OR ITS OFFICERS OR AGENTS SHALL NOT BE RESPONSIBLE FOR THE ACCURACY OR COMPLETENESS OF SCANNED COPIES OF THIS PLAN SHEET.

NOTE:

FOR ACCURATE RIGHT OF WAY DATA, CONTACT RIGHT OF WAY ENGINEERING AT THE DISTRICT OFFICE.

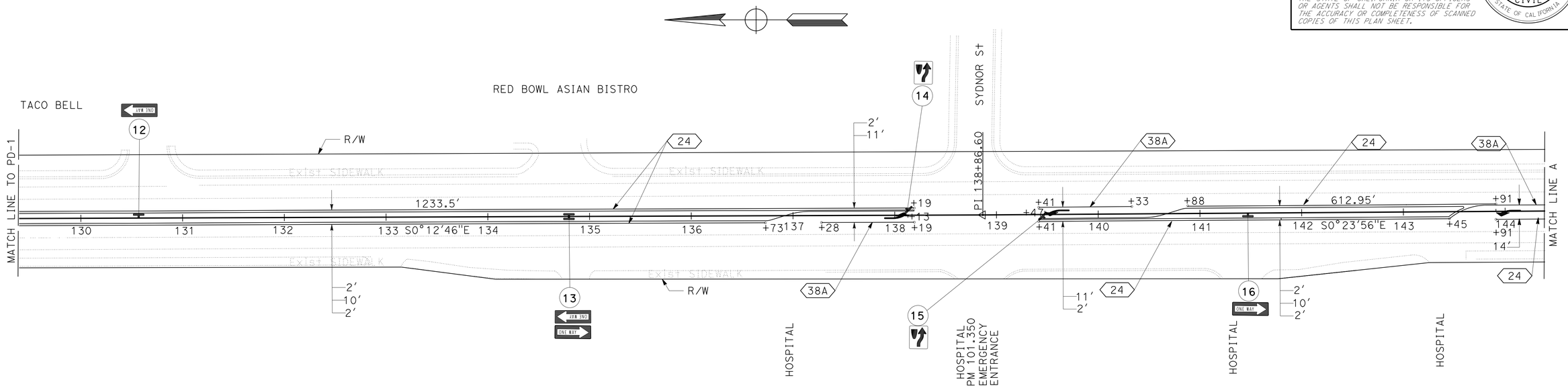

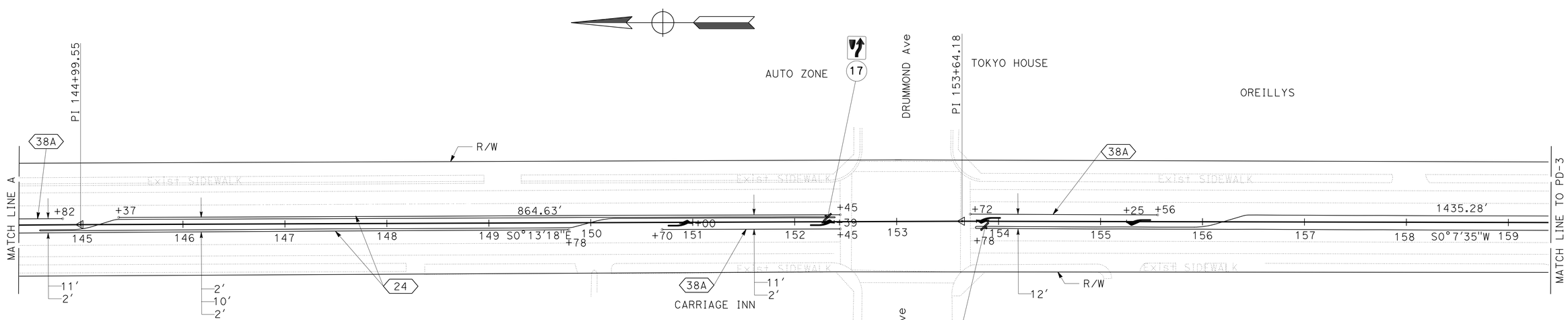

APPROVED FOR PAVEMENT DELINEATION AND SIGN WORK ONLY

PAVEMENT DELINEATION AND SIGN PLAN

SCALE: 1" = 50'

PD-2

STATE OF CALIFORNIA - DEPARTMENT OF TRANSPORTATION
Caltrans® TRAFFIC OPERATIONS

FUNCTIONAL SUPERVISOR: TERRY ERLWEIN
CALCULATED-DESIGNED BY: LIANNE TALBOT
CHECKED BY: DONNA HOLLAND
REVISED BY
DATE REVISED

LAST REVISION 06-17-14
DATE PLOTTED => 20-AUG-2014
TIME PLOTTED => 10:32

Dist	COUNTY	ROUTE	POST MILES TOTAL PROJECT	SHEET No.	TOTAL SHEETS
06	Ker	178	100.6/102.7	32	54

REGISTERED CIVIL ENGINEER 6-17-14 DATE

6-23-14
PLANS APPROVAL DATE

REGISTERED PROFESSIONAL ENGINEER LIANNE TALBOT No. 74599 Exp. 12-31-15 CIVIL STATE OF CALIFORNIA

THE STATE OF CALIFORNIA OR ITS OFFICERS OR AGENTS SHALL NOT BE RESPONSIBLE FOR THE ACCURACY OR COMPLETENESS OF SCANNED COPIES OF THIS PLAN SHEET.

NOTE:

FOR ACCURATE RIGHT OF WAY DATA, CONTACT RIGHT OF WAY ENGINEERING AT THE DISTRICT OFFICE.

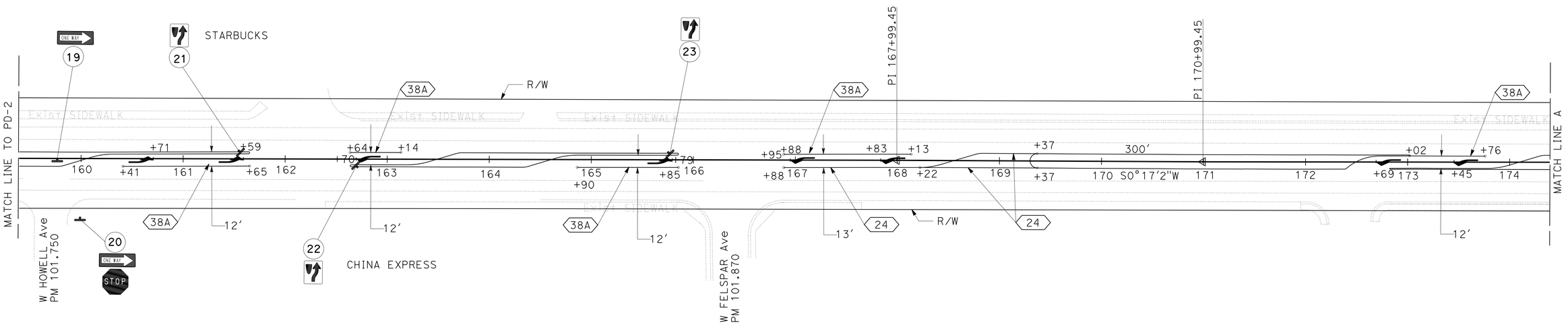

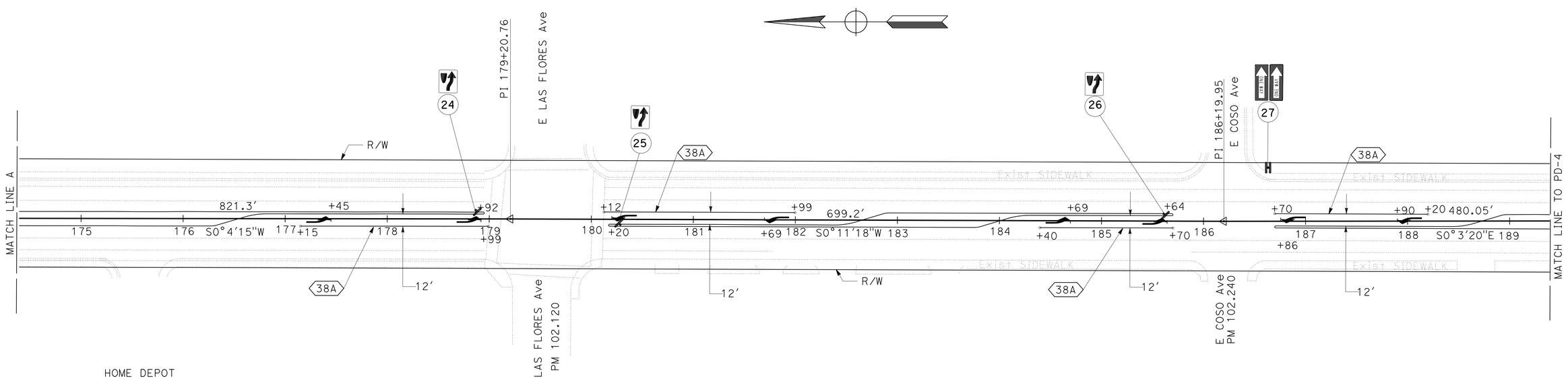

APPROVED FOR PAVEMENT DELINEATION AND SIGN WORK ONLY

PAVEMENT DELINEATION AND SIGN PLAN

SCALE: 1" = 50'

PD-3

STATE OF CALIFORNIA - DEPARTMENT OF TRANSPORTATION
Caltrans TRAFFIC OPERATIONS

FUNCTIONAL SUPERVISOR: TERRY ERLWEIN
CALCULATED-DESIGNED BY: LIANNE TALBOT
CHECKED BY: DONNA HOLLAND
REVISED BY / DATE REVISED

LAST REVISION 06-17-14
DATE PLOTTED => 20-AUG-2014
TIME PLOTTED => 10:32

Dist	COUNTY	ROUTE	POST MILES TOTAL PROJECT	SHEET No.	TOTAL SHEETS
06	Ker	178	100.6/102.7	33	54

REGISTERED CIVIL ENGINEER 6-17-14 DATE

6-23-14
PLANS APPROVAL DATE

REGISTERED PROFESSIONAL ENGINEER LIANNE TALBOT No. 74599 Exp. 12-31-15 CIVIL STATE OF CALIFORNIA

THE STATE OF CALIFORNIA OR ITS OFFICERS OR AGENTS SHALL NOT BE RESPONSIBLE FOR THE ACCURACY OR COMPLETENESS OF SCANNED COPIES OF THIS PLAN SHEET.

NOTE:

FOR ACCURATE RIGHT OF WAY DATA, CONTACT RIGHT OF WAY ENGINEERING AT THE DISTRICT OFFICE.

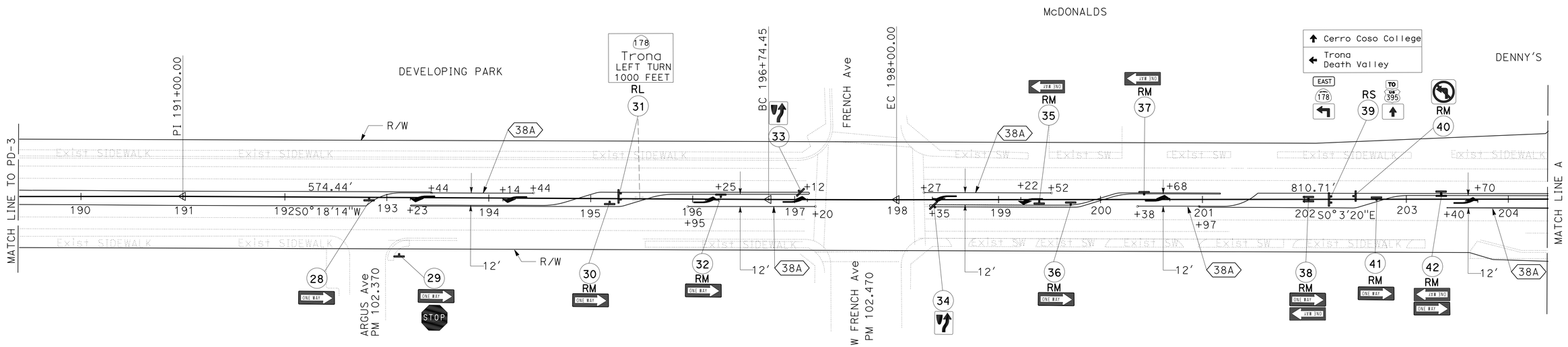

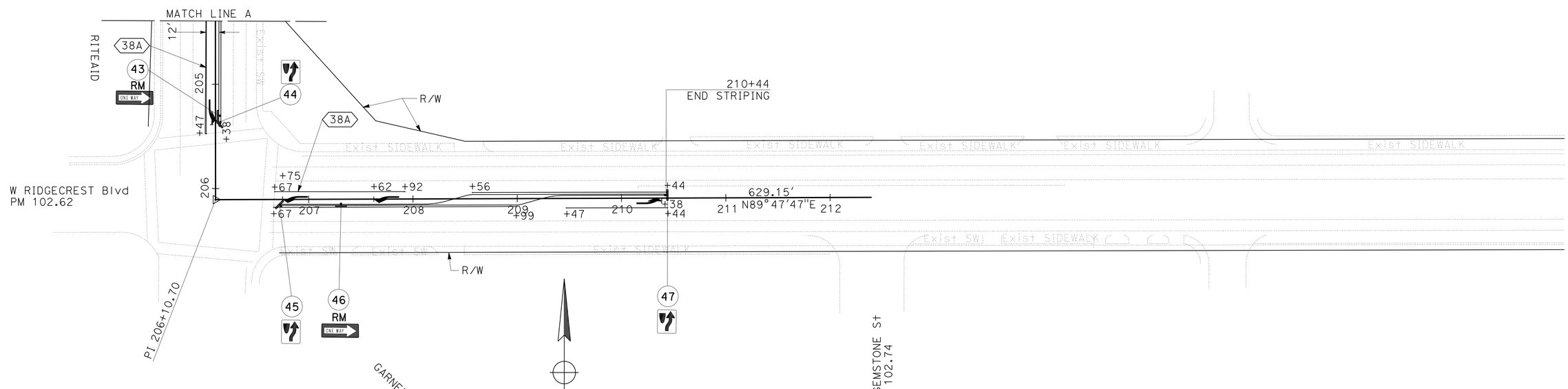

APPROVED FOR PAVEMENT DELINEATION AND SIGN WORK ONLY

PAVEMENT DELINEATION AND SIGN PLAN

SCALE: 1" = 50'

PD-4

STATE OF CALIFORNIA - DEPARTMENT OF TRANSPORTATION
Caltrans TRAFFIC OPERATIONS

FUNCTIONAL SUPERVISOR: TERRY ERLWEIN
CALCULATED-DESIGNED BY: LIANNE TALBOT
CHECKED BY: DONNA HOLLAND
REVISED BY
DATE REVISED

LAST REVISION 06-17-14
DATE PLOTTED => 20-AUG-2014
TIME PLOTTED => 10:32

Dist	COUNTY	ROUTE	POST MILES TOTAL PROJECT	SHEET No.	TOTAL SHEETS
06	Ker	178	100.6/102.7	34	54

REGISTERED CIVIL ENGINEER 6-17-14 DATE

6-23-14
PLANS APPROVAL DATE

REGISTERED PROFESSIONAL ENGINEER LIANNE TALBOT No. 74599 Exp. 12-31-15 CIVIL STATE OF CALIFORNIA

THE STATE OF CALIFORNIA OR ITS OFFICERS OR AGENTS SHALL NOT BE RESPONSIBLE FOR THE ACCURACY OR COMPLETENESS OF SCANNED COPIES OF THIS PLAN SHEET.

NOTE:
1. (N) NOT A SEPARATE ITEM, FOR INFORMATION ONLY.

PAINT TRAFFIC STRIPE (2-COAT)

STATION TO STATION			LENGTH (N)	DETAIL No. 24	DETAIL No. 38A
			LF	LF	LF
100+60	-	102+64	204	204	204
102+64	-	103+06	42	84	
103+06	-	106+79	373	746	
106+79	-	107+30	51	51	52
107+30	-	108+52	122	122	122
108+52	-	109+18	66	66	
109+18	-	111+41	223	446	
111+41	-	111+90	49	49	
111+90	-	112+85	95	95	95
113+90	-	114+85	95	95	95
114+85	-	115+36	51	51	
115+36	-	120+01	465	930	
120+01	-	120+43	42	42	44
120+43	-	121+32	89	89	89
121+32	-	121+92	60	60	
121+92	-	123+85	193	386	
123+85	-	124+60	75	75	
124+60	-	126+10	150	150	150
127+09	-	128+59	150	150	150
128+59	-	129+35	76	76	
129+35	-	136+73	738	1476	
136+73	-	137+28	55	55	
137+28	-	138+19	91	91	91
139+41	-	140+33	92	92	92
140+33	-	140+88	55	55	
140+88	-	143+45	257	514	
143+45	-	143+91	46	46	49
143+91	-	144+82	91	91	91
144+82	-	145+37	55	55	
145+37	-	149+78	441	882	
149+78	-	150+70	92	92	
150+70	-	152+45	175	175	175
153+72	-	155+56	184		184
160+41	-	161+65	124		124
162+64	-	163+14	50		50
164+90	-	165+85	95		95
166+88	-	168+13	125	125	125
168+13	-	168+22	9	9	
168+22	-	169+37	230	230	
173+02	-	173+76	74		74
177+15	-	178+99	184		184
180+12	-	181+99	187		187
SUBTOTAL 1				7955	2522

STATION TO STATION			LENGTH (N)	DETAIL No. 24	DETAIL No. 38A
			LF	LF	LF
184+40	-	185+70	130		130
186+70	-	188+20	150		150
193+44	-	194+44	100		100
195+95	-	197+20	125		125
198+27	-	199+52	125		125
200+38	-	200+97	59		59
203+40	-	205+47	207		207
206+67	-	207+92	125	125	125
207+92	-	208+56	64	64	
208+56	-	208+99	43	86	
208+99	-	209+47	48	48	
209+47	-	210+44	97	97	97
SUBTOTAL 2				420	1118
SUBTOTAL 1				7955	2522
TOTAL				12015	

OBJECT MARKERS TYPE K-1 (CA)

STATION	L+	R+	OBJECT MARKER * TYPE K-1 (CA)
			EA
103+46		X	1
106+92	X		1
112+82	X		1
113+87		X	1
120+14	X		1
126+02	X		1
127+17		X	1
138+15	X		1
139+44		X	1
143+55	X		1
144+66	X		1
152+36	X		1
153+80		X	1
161+62	X		1
162+66		X	1
165+83	X		1
169+37		X	1
173+00	X		1
178+92	X		1
180+20		X	1
185+67	X		1
186+72		X	1
193+42	X		1
197+11	X		1
198+36		X	1
200+99		X	1
205+37	X		1
206+68		X	1
210+40	X		1
TOTAL			29

* SURFACE MOUNT FLEXIBLE POST

PAINT PAVEMENT MARKING (2-COAT)

STATION	MARKING TYPE III ARROW
	SQFT
100+67	42
102+34	42
107+35	42
108+22	42
112+78	42
113+93	42
124+90	42
126+04	42
127+15	42
128+29	42
138+13	42
139+47	42
143+91	42
151+00	42
152+39	42
153+78	42
155+25	42
160+71	42
161+59	42
162+70	42
165+79	42
166+95	42
167+83	42
172+69	42
173+76	42
177+45	42
178+92	42
180+20	42
181+69	42
184+69	42
185+64	42
186+86	42
187+90	42
193+23	42
194+14	42
196+25	42
197+12	42
198+35	42
199+22	42
200+68	42
203+70	42
205+38	42
206+75	42
207+62	42
210+38	42
TOTAL	1890

REMOVE PAINTED TRAFFIC STRIPE

STATION TO STATION	REMOVE PAINTED TRAFFIC STRIPE	REMOVE YELLOW PAINTED TRAFFIC STRIPE (HAZARDOUS WASTE)
	LF	LF
107+71 TO 109+17	146	
111+11 TO 113+10		199
112+85 TO 113+11		26
113+63 TO 113+90	27	
114+85 TO 115+36		51
120+60 TO 121+92		132
129+25 TO 138+46		921
139+10 TO 145+37		627
155+75 TO 156+44		69
163+14 TO 163+60	46	
166+56 TO 168+83		227
173+02 TO 174+34		132
180+12 TO 182+89		277
193+44 TO 195+10		166
TOTAL	219	2827

PAVEMENT DELINEATION QUANTITIES

NO SCALE

PDQ-1

STATE OF CALIFORNIA - DEPARTMENT OF TRANSPORTATION
Caltrans TRAFFIC OPERATIONS

FUNCTIONAL SUPERVISOR: TERRY ERLWEIN
CALCULATED-DESIGNED BY: LIANNE TALBOT
CHECKED BY: DONNA HOLLAND
REVISED BY / DATE REVISED

LAST REVISION 06-17-14 | DATE PLOTTED => 20-AUG-2014 | TIME PLOTTED => 10:32

Dist	COUNTY	ROUTE	POST MILES TOTAL PROJECT	SHEET No.	TOTAL SHEETS
06	Ker	178	100.6/102.7	35	54

Lianne Talbot 6-17-14
REGISTERED CIVIL ENGINEER DATE

6-23-14
PLANS APPROVAL DATE

REGISTERED PROFESSIONAL ENGINEER LIANNE TALBOT No. 74599 Exp. 12-31-15 CIVIL STATE OF CALIFORNIA

THE STATE OF CALIFORNIA OR ITS OFFICERS OR AGENTS SHALL NOT BE RESPONSIBLE FOR THE ACCURACY OR COMPLETENESS OF SCANNED COPIES OF THIS PLAN SHEET.

NOTES:

1. Exact location of sign shall be determined by the engineer.
2. See Standard Plans RS1 for Roadside Sign Typical Installation Details No. 1.
3. Balanced single post installations of unframed single sheet aluminum panel signs shall have block spacers if 18" or more in depth and a combination of block spacers and back braces if 18" or more in depth and 34" or more in width. Sign panels less than 18" in depth and 34" or more in width shall have back braces only.
4. Balanced single post installations of Laminated Panel and Framed single sheet panel signs require back braces when 34" or more in width.

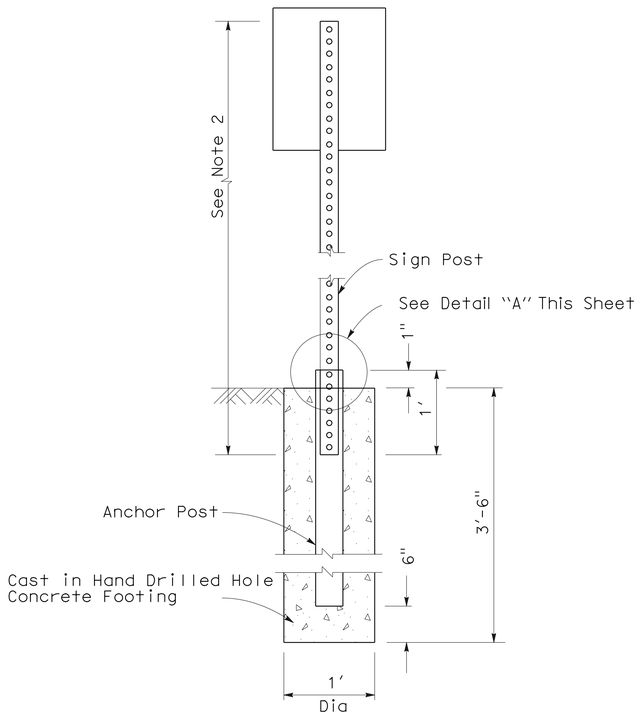

BACK VIEW

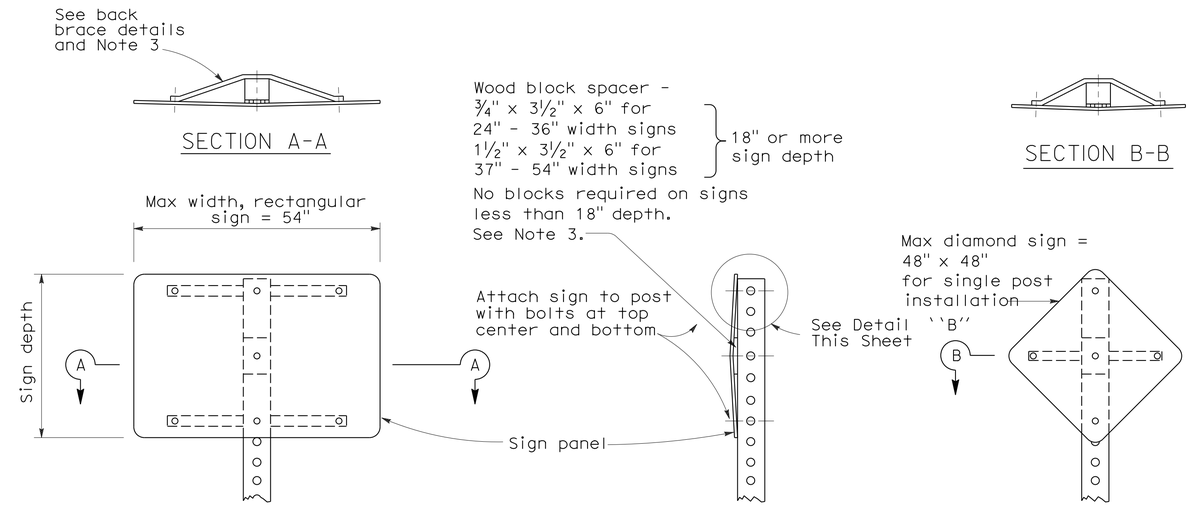

BALANCED

END VIEW

BALANCED

SINGLE POST INSTALLATION

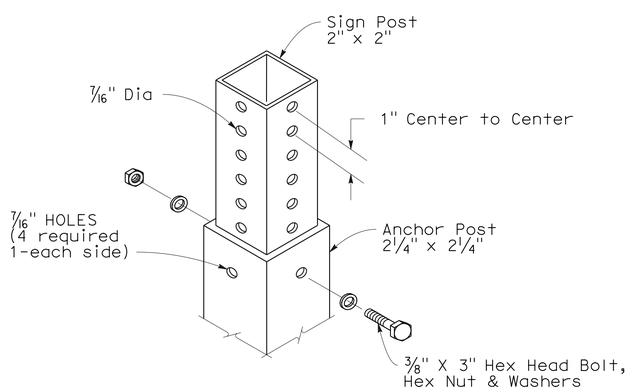

DETAIL A

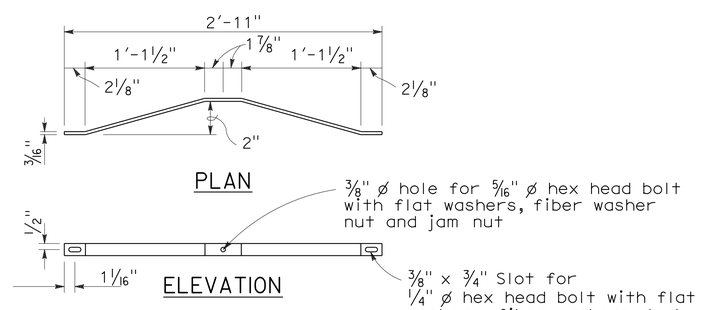

BACK BRACE DETAILS
See Note 3

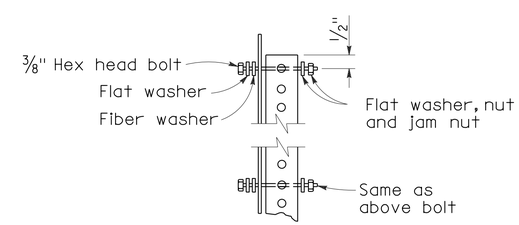

DETAIL B

ROADSIDE SIGN (SQUARE METAL POST)

SIGN DETAILS
NO SCALE **SD-1**

STATE OF CALIFORNIA - DEPARTMENT OF TRANSPORTATION
Caltrans 09-TRAFFIC OPERATIONS

FUNCTIONAL SUPERVISOR: TERESA ERLWEIN
CALCULATED-DESIGNED BY: LIANNE TALBOT
CHECKED BY: DONNA HOLLAND
REVISED BY
DATE REVISED

LAST REVISION 06-17-14
DATE PLOTTED => 20-AUG-2014
TIME PLOTTED => 10:32

Dist	COUNTY	ROUTE	POST MILES TOTAL PROJECT	SHEET No.	TOTAL SHEETS
06	Ker	178	100.6/102.7	36	54

Lianne Talbot 6-17-14
REGISTERED CIVIL ENGINEER DATE

6-23-14
PLANS APPROVAL DATE

REGISTERED PROFESSIONAL ENGINEER
LIANNE TALBOT
No. 74599
Exp. 12-31-15
CIVIL
STATE OF CALIFORNIA

THE STATE OF CALIFORNIA OR ITS OFFICERS OR AGENTS SHALL NOT BE RESPONSIBLE FOR THE ACCURACY OR COMPLETENESS OF SCANNED COPIES OF THIS PLAN SHEET.

NOTE:
HEIGHT OF INSTALLED SIGNS SHALL BE PER STANDARD PLAN RS1 EXCEPT R6-1 (R†) AND R6-1(L†) "ONE WAY" SIGNS SHALL BE INSTALLED 18" FROM THE BOTTOM OF THE PANEL TO TOP OC CURB.

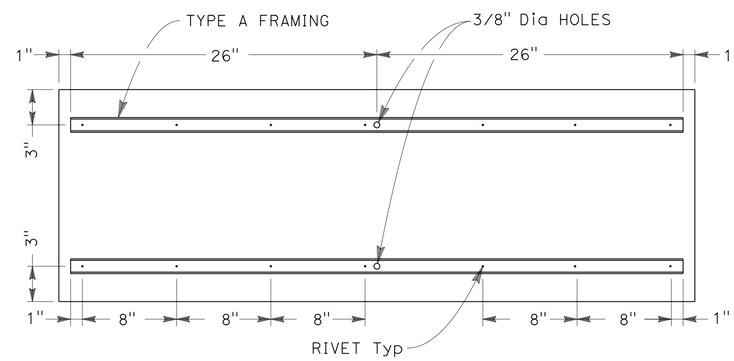

BACK VIEW

SPECIAL FRAMING DETAIL - R6-1 (R†) AND R6-1 (L†) ONE WAY SIGNS
SIGN NUMBERS 2, 6, 8, 12-13, 16, 19, 27, 28

SIGN DETAILS
NO SCALE **SD-2**

STATE OF CALIFORNIA - DEPARTMENT OF TRANSPORTATION
Caltrans® TRAFFIC OPERATIONS

FUNCTIONAL SUPERVISOR: TERRY ERLWEIN
CALCULATED-DESIGNED BY: LIANNE TALBOT
CHECKED BY: DONNA HOLLAND
REVISED BY
DATE REVISED

LAST REVISION 06-17-14
DATE PLOTTED => 20-AUG-2014
TIME PLOTTED => 10:32

Dist	COUNTY	ROUTE	POST MILES TOTAL PROJECT	SHEET No.	TOTAL SHEETS
06	Ker	178	100.6/102.7	37	40

REGISTERED CIVIL ENGINEER 6-17-14 DATE

6-23-14
PLANS APPROVAL DATE

REGISTERED PROFESSIONAL ENGINEER LIANNE TALBOT No. 74599 Exp. 12-31-15 CIVIL STATE OF CALIFORNIA

THE STATE OF CALIFORNIA OR ITS OFFICERS OR AGENTS SHALL NOT BE RESPONSIBLE FOR THE ACCURACY OR COMPLETENESS OF SCANNED COPIES OF THIS PLAN SHEET.

NOTES:

1. L = LENGTH OF SIGN; D = DEPTH OF SIGN.
2. CALIFORNIA SIGN CODES ARE DESIGNATED BY (CA). OTHERWISE, FEDERAL SIGN CODES ARE SHOWN.
3. EXACT LOCATION OF ROADSIDE SIGNS TO BE DETERMINED BY THE ENGINEER IN THE FIELD TO AVOID POSSIBLE UTILITY CONFLICTS.
4. ALL UNFRAMED RECTANGULAR SIGNS SHALL HAVE 2 BRACES UNLESS OTHERWISE DIRECTED BY THE ENGINEER.
5. REFER TO SIGN DETAILS AS NEEDED.
6. ROADSIDE SIGNS (ONE POST) SHALL BE IMMEDIATELY RE-INSTALLED IN THE SAME HOLE FROM WHICH THE EXISTING SIGN WAS REMOVED, NO SIGNS SHALL BE RELOCATED. DOUBLE SIGNAGE SHALL NOT BE ALLOWED.

SIGN SUMMARY

SIGN NUMBER	STATION	LEFT	RIGHT	CODE	MESSAGE	SIZE (L x D) IN x IN	REMOVE ROADSIDE SIGN EA	ROADSIDE SIGN (SQUARE METAL POST) EA	RESET ROADSIDE SIGN (TWO POST) EA	RELOCATE ROADSIDE SIGN-TWO POST EA	SIGN MATERIALS: FURNISH SINGLE SHEET ALUMINUM SIGN 0.063"-UNFRAMED SQFT	0.063"-FRAMED SQFT	SINGLE FACED	BACKGROUND SHEETING COLOR	BACKGROUND RETROREFLECTIVE ASTM TYPE	LEGEND SHEETING COLOR	LEGEND RETROREFLECTIVE ASTM TYPE	GRAFFITI FILM STANDARD	GRAFFITI FILM PREMIUM	POSTS SIZE (TYPE) IN x IN	FNBT	FSBT	FEBT	FWBT	REMARKS
1	103+55		X	R4-7c	NARROW KEEP RIGHT	18 x 30		1			3.75		X	WHITE	III	BLACK		X		2 x 2		X			
2	106+82		X	R6-1 (R+)	ONE WAY RIGHT	54 x 18		1				6.75	X	WHITE	III	BLACK		X		2 x 2			X		SEE SPECIAL FRAMING DETAIL SD-2
3	107+44		X	R6-1 (R+)	ONE WAY RIGHT	36 x 12		1			3.00		X	WHITE	III	BLACK		X		2 x 2		X			REMOVE Exist R1-1, INSTALL TWO PANELS R6-1 (R+)
				R1-1	STOP	36 x 36	1				9.00		X	RED	VII	WHITE	VII	X				X			ABOVE R1-1
4	112+78	X		R4-7c	NARROW KEEP RIGHT	18 x 30		1			3.75		X	WHITE	III	BLACK		X		2 x 2			X		MOUNT AT 45° FACING TURNING TRAFFIC
5	113+96		X	R4-7c	NARROW KEEP RIGHT	18 x 30		1			3.75		X	WHITE	III	BLACK		X		2 x 2				X	MOUNT AT 45° FACING TURNING TRAFFIC
6	120+00		X	R6-1 (R+)	ONE WAY RIGHT	54 x 18		1				6.75	X	WHITE	III	BLACK		X		2 x 2			X		SEE SPECIAL FRAMING DETAIL SD-2
7	120+36		X	R6-1 (R+)	ONE WAY RIGHT	36 x 12		1			3.00		X	WHITE	III	BLACK		X		2 x 2			X		REMOVE Exist R1-1, INSTALL TWO PANELS R6-1 (R+)
				R1-1	STOP	36 x 36	1				9.00		X	RED	VII	WHITE	VII	X					X		ABOVE R1-1
8	123+32		X	R6-1 (R+)	ONE WAY RIGHT	54 x 18		1				6.75	X	WHITE	III	BLACK		X		2 x 2			X		SEE SPECIAL FRAMING DETAIL SD-2
9	123+55		X	R6-1 (R+)	ONE WAY RIGHT	36 x 12		1			3.00		X	WHITE	III	BLACK		X		2 x 2			X		REMOVE Exist R1-1, INSTALL TWO PANELS R6-1 (R+)
				R1-1	STOP	36 x 36	1				9.00		X	RED	VII	WHITE	VII	X					X		ABOVE R1-1
10	126+00	X		R4-7c	NARROW KEEP RIGHT	18 x 30		1			3.75		X	WHITE	III	BLACK		X		2 x 2			X		MOUNT AT 45° FACING TURNING TRAFFIC
11	127+20		X	R4-7c	NARROW KEEP RIGHT	18 x 30		1			3.75		X	WHITE	III	BLACK		X		2 x 2				X	MOUNT AT 45° FACING TURNING TRAFFIC
12	130+57	X		R6-1 (R+)	ONE WAY RIGHT	54 x 18		1				6.75	X	WHITE	III	BLACK		X		2 x 2				X	SEE SPECIAL FRAMING DETAIL SD-2
13	134+80	X		R6-1 (R+)	ONE WAY RIGHT	54 x 18		1				6.75	X	WHITE	III	BLACK		X		2 x 2				X	
			X	R6-1 (R+)	ONE WAY RIGHT	54 x 18						6.75	X	WHITE	III	BLACK		X					X		SEE SPECIAL FRAMING DETAIL SD-2
14	138+12	X		R4-7c	NARROW KEEP RIGHT	18 x 30		1			3.75		X	WHITE	III	BLACK		X		2 x 2			X		MOUNT AT 45° FACING TURNING TRAFFIC
15	139+49		X	R4-7c	NARROW KEEP RIGHT	18 x 30		1			3.75		X	WHITE	III	BLACK		X		2 x 2				X	MOUNT AT 45° FACING TURNING TRAFFIC
16	141+47		X	R6-1 (R+)	ONE WAY RIGHT	54 x 18		1				6.75	X	WHITE	III	BLACK		X		2 x 2			X		SEE SPECIAL FRAMING DETAIL SD-2
17	152+32	X		R4-7c	NARROW KEEP RIGHT	18 x 30		1			3.75		X	WHITE	III	BLACK		X		2 x 2			X		MOUNT AT 45° FACING TURNING TRAFFIC
18	153+86		X	R4-7c	NARROW KEEP RIGHT	18 x 30		1			3.75		X	WHITE	III	BLACK		X		2 x 2				X	MOUNT AT 45° FACING TURNING TRAFFIC
19	159+77		X	R6-1 (R+)	ONE WAY RIGHT	54 x 18		1				6.75	X	WHITE	III	BLACK		X		2 x 2			X		SEE SPECIAL FRAMING DETAIL SD-2
20	160+00		X	R6-1 (R+)	ONE WAY RIGHT	36 x 12		1			3.00		X	WHITE	III	BLACK		X		2 x 2			X		REMOVE Exist R1-1, INSTALL TWO PANELS R6-1 (R+)
				R1-1	STOP	36 x 36	1				9.00		X	RED	VII	WHITE	VII	X					X		ABOVE R1-1
21	161+56	X		R4-7c	NARROW KEEP RIGHT	18 x 30		1			3.75		X	WHITE	III	BLACK		X		2 x 2			X		MOUNT AT 45° FACING TURNING TRAFFIC
22	162+72		X	R4-7c	NARROW KEEP RIGHT	18 x 30		1			3.75		X	WHITE	III	BLACK		X		2 x 2				X	MOUNT AT 45° FACING TURNING TRAFFIC
23	165+78	X		R4-7c	NARROW KEEP RIGHT	18 x 30		1			3.75		X	WHITE	III	BLACK		X					X		MOUNT AT 45° FACING TURNING TRAFFIC
24	178+86	X		R4-7c	NARROW KEEP RIGHT	18 x 30		1			3.75		X	WHITE	III	BLACK		X		2 x 2			X		MOUNT AT 45° FACING TURNING TRAFFIC
25	180+25		X	R4-7c	NARROW KEEP RIGHT	18 x 30		1			3.75		X	WHITE	III	BLACK		X		2 x 2				X	MOUNT AT 45° FACING TURNING TRAFFIC
26	185+63	X		R4-7c	NARROW KEEP RIGHT	18 x 30		1			3.75		X	WHITE	III	BLACK		X		2 x 2			X		MOUNT AT 45° FACING TURNING TRAFFIC
27	185+73	X		R6-1 (L+)	ONE WAY LEFT	54 x 18		1				6.75	X	WHITE	III	BLACK		X		2 x 2		X			SEE SPECIAL FRAMING DETAIL SD-2
				R6-1 (R+)	ONE WAY RIGHT	54 x 18						6.75	X	WHITE	III	BLACK		X			X				SEE SPECIAL FRAMING DETAIL SD-2
28	192+85		X	R6-1 (R+)	ONE WAY RIGHT	54 x 18		1				6.75	X	WHITE	III	BLACK		X		2 x 2			X		SEE SPECIAL FRAMING DETAIL SD-2
29	193+14		X	R6-1 (R+)	ONE WAY RIGHT	36 x 12		1			3.00		X	WHITE	III	BLACK		X		2 x 2			X		REMOVE Exist R1-1, INSTALL TWO PANELS R6-1 (R+)
				R1-1	STOP	36 x 36	1				9.00		X	RED	VII	WHITE	VII	X					X		ABOVE R1-1
TOTAL SHEET SQ-1							5	29	0	0	116.25	74.25													

SIGN QUANTITIES SQ-1

STATE OF CALIFORNIA - DEPARTMENT OF TRANSPORTATION
Caltrans TRAFFIC OPERATIONS

FUNCTIONAL SUPERVISOR: TERRY ERLWEIN
CALCULATED-DESIGNED BY: LIANNE TALBOT
CHECKED BY: DONNA HOLLAND
REVISED BY
DATE REVISED

LAST REVISION 06-17-14
DATE PLOTTED => 20-AUG-2014
TIME PLOTTED => 10:32

Dist	COUNTY	ROUTE	POST MILES TOTAL PROJECT	SHEET No.	TOTAL SHEETS
06	Ker	178	100.6/102.7	38	54

REGISTERED CIVIL ENGINEER 6-17-14 DATE

6-23-14
PLANS APPROVAL DATE

REGISTERED PROFESSIONAL ENGINEER LIANNE TALBOT No. 74599 Exp. 12-31-15 CIVIL STATE OF CALIFORNIA

THE STATE OF CALIFORNIA OR ITS OFFICERS OR AGENTS SHALL NOT BE RESPONSIBLE FOR THE ACCURACY OR COMPLETENESS OF SCANNED COPIES OF THIS PLAN SHEET.

SIGN SUMMARY

SIGN NUMBER	STATION	LEFT	RIGHT	CODE	MESSAGE	SIZE (L x D) IN x IN	REMOVE ROADSIDE SIGN EA	ROADSIDE SIGN (SQUARE METAL POST) EA	RESET ROADSIDE SIGN (TWO POST) EA	RELOCATE ROADSIDE SIGN-TWO POST EA	SIGN MATERIALS: FURNISH SINGLE SHEET ALUMINUM SIGN 0.063"-UNFRAMED SQFT	FURNISH SINGLE SHEET ALUMINUM SIGN 0.063"-FRAMED SQFT	SINGLE FACED	BACKGROUND SHEETING COLOR	BACKGROUND RETROREFLECTIVE ASTM TYPE	LEGEND SHEETING COLOR	LEGEND RETROREFLECTIVE ASTM TYPE	GRAFFITI FILM STANDARD	GRAFFITI FILM PREMIUM	POSTS SIZE (TYPE) IN x IN	FNBT	FSBT	FEBT	FWBT	REMARKS
30	195+18		X	R6-1 (Rt)	ONE WAY RIGHT		1																		
31	195+50	X		G22(CA)	Trona 1000 FEET	54 x 48				1										4 x 4		X			
32	196+30	X		R6-1 (Rt)	ONE WAY RIGHT		1																		
33	197+08	X		R4-7c	NARROW KEEP RIGHT	18 x 30		1			3.75		X	WHITE	III	BLACK		X		2 x 2			X		MOUNT AT 45° FACING TURNING TRAFFIC
34	198+42		X	R4-7c	NARROW KEEP RIGHT	18 x 30		1			3.75		X	WHITE	III	BLACK		X		2 x 2				X	MOUNT AT 45° FACING TURNING TRAFFIC
35	199+42		X	R6-1 (Rt)	ONE WAY RIGHT		1																		
36	199+73		X	R6-1 (Rt)	ONE WAY RIGHT		1																		
37	200+44	X		R6-1 (Rt)	ONE WAY RIGHT		1																		
38	202+06	X		R6-1 (Rt)	ONE WAY RIGHT		1																		
				R6-1 (Rt)	ONE WAY RIGHT																				
39	202+27	X		G 8	CERRO COSO COLLEGE				1											4 x 4		X			
40	202+49		X	R3-2	NO LEFT TURN		1																		
41	202+87	X		R6-1 (Rt)	ONE WAY RIGHT		1																		
42	203+36	X		R6-1 (Rt)	ONE WAY RIGHT		1																		
				R6-1 (Rt)	ONE WAY RIGHT																				
43	205+37	X		R6-1 (Rt)	ONE WAY RIGHT		1																		
44	205+37	X		R4-7c	NARROW KEEP RIGHT	18 x 30		1			3.75		X	WHITE	III	BLACK		X		2 x 2			X		MOUNT AT 45° FACING TURNING TRAFFIC
45	206+70		X	R4-7c	NARROW KEEP RIGHT	18 x 30		1			3.75		X	WHITE	III	BLACK		X		2 x 2			X		MOUNT AT 45° FACING TURNING TRAFFIC
46	207+26		X	R6-1 (Rt)	ONE WAY RIGHT		1																		
47	210+37	X		R4-7c	NARROW KEEP RIGHT	18 x 30		1			3.75		X	WHITE	III	BLACK		X		2 x 2				X	
TOTAL SHEET SQ-2							11	5	1	1	18.75	0.0													
TOTAL SHEET SQ-1							5	29	0	0	116.25	74.25													
TOTAL							16	34	1	1	135.00	74.25													

SIGN QUANTITIES
SQ-2

LIANNE TALBOT — REVISED BY
DONNA HOLLAND — DATE REVISED
CALCULATED-DESIGNED BY
CHECKED BY
FUNCTIONAL SUPERVISOR
TERRY ERLWEIN

STATE OF CALIFORNIA - DEPARTMENT OF TRANSPORTATION
Caltrans TRAFFIC OPERATIONS

LAST REVISION 06-17-14
DATE PLOTTED => 20-AUG-2014
TIME PLOTTED => 10:32

Dist	COUNTY	ROUTE	POST MILES TOTAL PROJECT	SHEET No.	TOTAL SHEETS
06	Ker	178	100.6/102.7	39	54

REGISTERED CIVIL ENGINEER 05-01-14 DATE

6-23-14
PLANS APPROVAL DATE

REGISTERED PROFESSIONAL ENGINEER ELLERY B. ELLIS No. 62592 Exp. 6-30-16 CIVIL STATE OF CALIFORNIA

THE STATE OF CALIFORNIA OR ITS OFFICERS OR AGENTS SHALL NOT BE RESPONSIBLE FOR THE ACCURACY OR COMPLETENESS OF SCANNED COPIES OF THIS PLAN SHEET.

MINOR CONCRETE
(MISCELLANEOUS CONSTRUCTION)

LOCATION		CURB SPECIAL	CONCRETE CURB (TYPE B1-6)	A1-6 CURB (MODIFIED)	MINOR Conc PAVING
FROM STATION	TO STATION	CY	CY	CY	CY
100+65	107+02		23.8		0.4
107+30	112+85	7.1	17.4		0.2
113+90	120+17	3.1	30.4		0.2
120+43	126+05	8.1	15.8		0.2
127+14	138+20	8.1	47.8		0.2
139+41	143+64	3.1	18.1		0.2
143+90	152+40	7.3	30.3		0.2
153+78	161+64		46.3		2.6
162+64	165+85		19.0		1.3
166+90	173+02	0.8	20.2		0.1
172+82	178+95	2.9	30.2		1.7
180+18	185+70		32.5		2.7
186+70	193+44	0.8	39.0		1.3
193+23	197+14	3.8	15.2		1.1
198+33	201+20	2.7	11.3		1.4
200+97	205+40	0.6	24.8		1.8
206+72	210+45	7.1	5.6		0.2
	SUB TOTAL	55.5	427.7	220.0*	15.8
	TOTAL		719.0		

*SEE "Q-2" SHEET FOR CONCRETE CURB (TYPE A1-6) QUANTITIES

ROADWAY QUANTITIES

LOCATION		ROADWAY EXCAVATION	HMA (TYPE A)	REMOVE CONCRETE	COLD PLANE ASPHALT CONCRETE PAVEMENT	IMPORTED BORROW	EMBANKMENT (N)	TACK COAT
FROM Sta	TO Sta	CY	TON	CY	SQYD	CY	CY	TON
100+65	107+00	103.4	37.8			55.6	159.0	0.1
107+28	112+85	111.2	58.8		138	58.4	169.6	0.1
113+90	120+18	163.9	66.5			90.9	254.8	0.1
120+40	126+05	97.6	59.5		224	59.4	157.0	0.1
127+10	138+20	267.3	116.6		142	143.8	411.1	0.1
139+40	143+65	98.6	44.2			69.7	168.3	0.1
143+90	152+40	175.5	82.4		261	89.4	264.9	0.1
153+75	161+65	199.9	83.5		197	108.2	308.1	0.1
162+60	165+80	66.6	34.4		155	30.5	97.1	0.1
166+80	173+00	146.9	40.0		64	69.9	216.8	0.1
172+80	178+95	135.5	65.1		298	69.4	204.9	0.1
180+10	185+70	98.4	58.7		205	37.7	136.1	0.1
186+70	193+45	198.3	71.4		66	119.3	317.6	0.1
193+10	197+15	64.0	94.3	21.5	188	19.3	83.3	0.1
198+30	201+20	9.0	50.9	15.6	148		9.0	0.1
200+95	205+40	46.7	47.3	18.2	330	39.2	85.9	0.1
206+30	210+45	26.1	56.2	18.4	143	14.3	40.4	0.1
HMA FROM COLD PLANE			345.5					
	TOTAL	2009.0	1413.1	73.7	2559	1075.0	3083.9	1.7

TREATED WOOD WASTE

STATION	L+	R+	TREATED WOOD WASTE Ib
196+30	X		25
199+42		X	25
199+73		X	25
202+06	X		25
202+49		X	38
202+87	X		25
203+36	X		25
205+37	X		25
207+26		X	25
TOTAL			238

(N)-NOT A SEPARATE PAY ITEM, FOR INFORMATION ONLY

SUMMARY OF QUANTITIES
Q-1

STATE OF CALIFORNIA - DEPARTMENT OF TRANSPORTATION
Caltrans DESIGN

FUNCTIONAL SUPERVISOR: ARTHUR RAMIREZ
CALCULATED-DESIGNED BY: SHAKILA HANIF
CHECKED BY: ELLERY ELLIS
REVISED BY
DATE REVISED

LAST REVISION 05-22-14 | DATE PLOTTED => 20-AUG-2014 | TIME PLOTTED => 10:33

Dist	COUNTY	ROUTE	POST MILES TOTAL PROJECT	SHEET No.	TOTAL SHEETS
06	Ker	178	100.6/102.7	40	54

REGISTERED CIVIL ENGINEER 05-01-14 DATE

6-23-14
PLANS APPROVAL DATE

REGISTERED PROFESSIONAL ENGINEER ELLERY B. ELLIS No. 62592 Exp. 06-30-16 CIVIL STATE OF CALIFORNIA

THE STATE OF CALIFORNIA OR ITS OFFICERS OR AGENTS SHALL NOT BE RESPONSIBLE FOR THE ACCURACY OR COMPLETENESS OF SCANNED COPIES OF THIS PLAN SHEET.

MISCELLANEOUS CONSTRUCTION

DESCRIPTION	LOCATION/STATION		PRECAST Conc PAVER	SAND BEDDING	CLASS 2 AB	A1-6 CURB (MODIFIED)	MINOR CONCRETE (TEXTURED PAVING)
			SQFT	CY	CY	CY	SQFT
10' WIDE MEDIAN	SR 178 CHINA LAKE Blvd	STA 103+47.10 TO 106+90.20			16.0		2151
10' WIDE MEDIAN	SR 178 CHINA LAKE Blvd	STA 103+67.86 TO 106+78.21	252	1.0	2.0	17.0	
10' WIDE MEDIAN	SR 178 CHINA LAKE Blvd	STA 108+90.56 TO 111+67.38			14.0		1881
10' WIDE MEDIAN	SR 178 CHINA LAKE Blvd	STA 109+17.12 TO 111+37.17	171	1.0	1.0	12.0	
10' WIDE MEDIAN	SR 178 CHINA LAKE Blvd	STA 115+11.43 TO 120+12.86			24.0		3204
10' WIDE MEDIAN	SR 178 CHINA LAKE Blvd	STA 115+35.38 TO 120+01.34	357	2.0	3.0	25.0	
10' WIDE MEDIAN	SR 178 CHINA LAKE Blvd	STA 121+67.59 TO 124+10.86			11.0		1521
10' WIDE MEDIAN	SR 178 CHINA LAKE Blvd	STA 121+92.13 TO 124+85.19	150	1.0	1.0	10.0	
10' WIDE MEDIAN	SR 178 CHINA LAKE Blvd	STA 129+08.41 TO 136+97.42			38.0		5067
10' WIDE MEDIAN	SR 178 CHINA LAKE Blvd	STA 129+33.62 TO 136+73.84	562	3.0	4.0	39.0	
10' WIDE MEDIAN	SR 178 CHINA LAKE Blvd	STA 140+62.97 TO 143+54.80			14.0		1854
10' WIDE MEDIAN	SR 178 CHINA LAKE Blvd	STA 140+87.66 TO 143+40.94	194	1.0	1.0	13.0	
10' WIDE MEDIAN	SR 178 CHINA LAKE Blvd	STA 145+09.82 TO 150+05.51			24.0		3240
10' WIDE MEDIAN	SR 178 CHINA LAKE Blvd	STA 145+37.19 TO 149+77.20	339	2.0	3.0	23.0	
14' WIDE MEDIAN	SR 178 CHINA LAKE Blvd	STA 156+06.42 TO 160+16.11			28.0		3726
14' WIDE MEDIAN	SR 178 CHINA LAKE Blvd	STA 156+45.13 TO 159+76.25	595	3.0	4.0	18.0	
14' WIDE MEDIAN	SR 178 CHINA LAKE Blvd	STA 163+34.17 TO 164+71.32			8.0		1143
14' WIDE MEDIAN	SR 178 CHINA LAKE Blvd	STA 163+73.22 TO 164+32.72	102	1.0	1.0	3.0	
14' WIDE MEDIAN	SR 178 CHINA LAKE Blvd	STA 169+30.01 TO 172+56.90			22.0		3033
14' WIDE MEDIAN	SR 178 CHINA LAKE Blvd	STA 169+35.95 TO 172+35.83	537	3.0	4.0	16.0	
14' WIDE MEDIAN	SR 178 CHINA LAKE Blvd	STA 173+97.03 TO 176+66.43			18.0		2394
14' WIDE MEDIAN	SR 178 CHINA LAKE Blvd	STA 174+34.69 TO 176+28.78	352	2.0	3.0	11.0	
14' WIDE MEDIAN	SR 178 CHINA LAKE Blvd	STA 182+53.50 TO 184+14.63			10.0		1359
14' WIDE MEDIAN	SR 178 CHINA LAKE Blvd	STA 182+91.64 TO 183+75.69	159	1.0	1.0	5.0	
14' WIDE MEDIAN	SR 178 CHINA LAKE Blvd	STA 188+58.42 TO 192+97.68			30.0		4032
14' WIDE MEDIAN	SR 178 CHINA LAKE Blvd	STA 188+98.45 TO 192+78.53	674	3.0	5.0	20.0	
14' WIDE MEDIAN	SR 178 CHINA LAKE Blvd	STA 194+72.46 TO 195+65.59			5.0		729
14' WIDE MEDIAN	SR 178 CHINA LAKE Blvd	STA 195+09.70 TO 195+27.73	30	1.0	1.0	1.0	
14' WIDE MEDIAN	SR 178 CHINA LAKE Blvd	STA 201+36.40 TO 202+87.43			10.0		1323
14' WIDE MEDIAN	SR 178 CHINA LAKE Blvd	STA 201+62.45 TO 202+47.48	161	1.0	1.0	5.0	
14' WIDE MEDIAN	SR 178	STA 208+24.81 TO 209+19.36			4.0		558
14' WIDE MEDIAN	SR 178	STA 208+51.36 TO 208+93.35	37	1.0	1.0	2.0	
		TOTAL	4672	27.0	312.0	220.0 *	37 215

* INCLUDED IN MINOR CONCRETE (Misc CONSTRUCTION) TABLE.

SUMMARY OF QUANTITIES

Q-2

STATE OF CALIFORNIA - DEPARTMENT OF TRANSPORTATION
Caltrans DESIGN

FUNCTIONAL SUPERVISOR: ARTHUR RAMIREZ
CALCULATED-DESIGNED BY: ANDREW UN
CHECKED BY: ELLERY ELLIS
REVISED BY
DATE REVISED

LAST REVISION 05-20-14 | DATE PLOTTED => 20-AUG-2014 | TIME PLOTTED => 10:33

Dist	COUNTY	ROUTE	POST MILES TOTAL PROJECT	SHEET No.	TOTAL SHEETS
06	Ker	178	100.6/102.7	41	54

REGISTERED CIVIL ENGINEER 02/13/14 DATE

6-23-14
PLANS APPROVAL DATE

REGISTERED PROFESSIONAL ENGINEER MITCHELL NGO No. 18920 Exp. 12/31/15 ELECTRICAL STATE OF CALIFORNIA

THE STATE OF CALIFORNIA OR ITS OFFICERS OR AGENTS SHALL NOT BE RESPONSIBLE FOR THE ACCURACY OR COMPLETENESS OF SCANNED COPIES OF THIS PLAN SHEET.

NOTES:

1. DISCONNECT ALL CABLES RUNNING IN CONDUIT RUNS 4 AND 5 AT THE CONTROLLER CABINET. PULL OUT CABLES TO POLE C PULL BOX. RC PULL BOX IN MEDIAN. INSTALL REDUCER COUPLING OF CONDUIT RUNS 4 AND 5 TOGETHER. RE-PULL CABLES BACK TO CONTROLLER CABINET FROM POLE C PULL BOX AND RE-TERMINATE.
2. DISCONNECT ALL CABLES RUNNING IN CONDUIT RUNS 8 AND 9 AT THE CONTROLLER CABINET. PULL OUT CABLES TO POLE G PULL BOX. RC PULL BOX AT MEDIAN. INSTALL REDUCER COUPLING OF CONDUIT RUNS 8 AND 9 TOGETHER. RE-PULL CABLES BACK TO CONTROLLER CABINET FROM POLE G PULL BOX AND RE-TERMINATE.
3. ADJUST Exist PB TO FG.
4. FOR ACCURATE RIGHT OF WAY DATA, CONTACT RIGHT OF WAY ENGINEERING AT THE DISTRICT OFFICE.

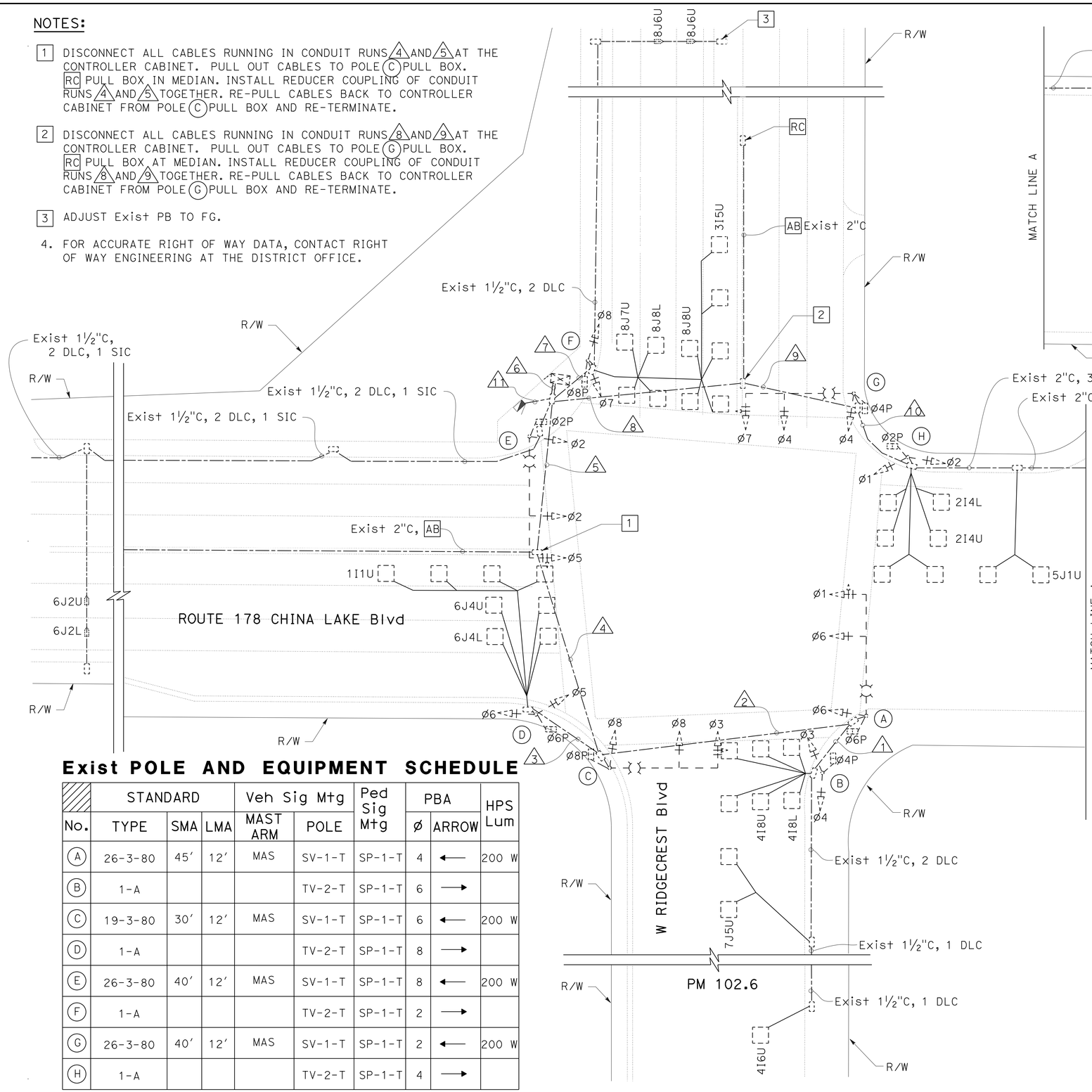

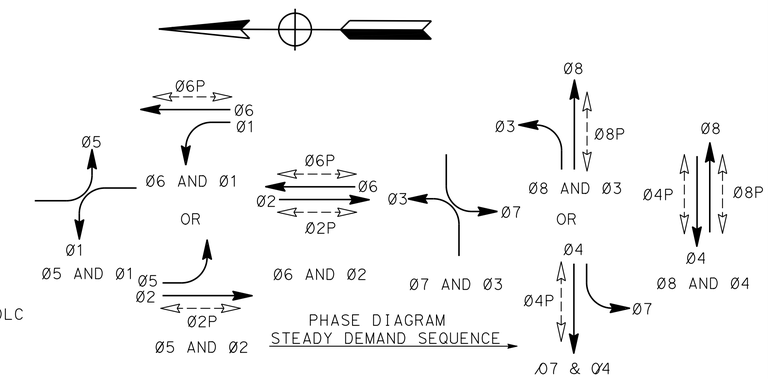

Exist CONDUIT AND CONDUCTOR SCHEDULE

CABLE SCHEDULE				CONDUIT RUN NUMBER AND SIZE										
CABLE TYPE	POLE	PHASE		1	2	3	4	5	6	7	8	9	10	11
				2"	2½"	2"	3"	3½"	2-4"	2"	3½"	3"	2½"	2"
Veh-Ped 12CSC	A	1,6,6P	4		1		1	1	1					
					1		1	1	1					
	B	3,4,4P	6	1	1		1	1	1					
				1	1		1	1	1					
	C	3,8,8P	6				1	1	1					
							1	1	1					
	D	5,6,6P	8			1	1	1	1					
						1	1	1	1					
	E	2,5,2P	8						1					
									1					
	F	7,8,8P	2						1	1				
									1	1				
	G	4,7,4P	2						1		1	1		
									1		1	1		
PBA 3CSC	H	1,2,2P	4						1		1	1	1	
									1		1	1	1	1
	TOTAL CABLES			1	2	1	4	4	8	1	2	2	1	
				1	2	1	4	4	8	1	2	2	1	
AWG	CIRCUIT													
#10	LIGHTING				2		2	2			2	2		2
3 PAIR. #20	SIC								1					
#6	SIGNAL SERVICE													2
#10	IRR SERVICE													2
	DLC													
	PHASE													
	Ø1					1	1	1	1					
	Ø2								4		4	4	4	
	Ø3								1	1				
	Ø4			4	4		4	4	4					
	Ø5								2		2	2	2	
	Ø6					2	2	2	4					
	Ø7			1	1		1	1	1					
	Ø8								4	4				
	TOTAL			5	5	3	8	8	21	5	6	6	6	

ALL CONDUITS AND CABLES ARE Exist UNLESS OTHERWISE NOTED.

Exist POLE AND EQUIPMENT SCHEDULE

	STANDARD			Veh Sig Mtg		Ped Sig Mtg	PBA		HPS Lum
No.	TYPE	SMA	LMA	MAST ARM	POLE		Ø	ARROW	
A	26-3-80	45′	12′	MAS	SV-1-T	SP-1-T	4	←	200 W
B	1-A				TV-2-T	SP-1-T	6	→	
C	19-3-80	30′	12′	MAS	SV-1-T	SP-1-T	6	←	200 W
D	1-A				TV-2-T	SP-1-T	8	→	
E	26-3-80	40′	12′	MAS	SV-1-T	SP-1-T	8	←	200 W
F	1-A				TV-2-T	SP-1-T	2	→	
G	26-3-80	40′	12′	MAS	SV-1-T	SP-1-T	2	←	200 W
H	1-A				TV-2-T	SP-1-T	4	→	

ALL EQUIPMENT IS Exist UNLESS OTHERWISE NOTED.

APPROVED FOR ELECTRICAL WORK ONLY.

MODIFY SIGNAL

SCALE:1"=20′ **E-1**

STATE OF CALIFORNIA - DEPARTMENT OF TRANSPORTATION
Caltrans® TRAFFIC OPERATIONS

FUNCTIONAL SUPERVISOR: TERRY ERLWEIN
CALCULATED-DESIGNED BY: MITCHELL NGO
CHECKED BY: PHIL GRAHAM
REVISED BY
DATE REVISED

LAST REVISION 06-23-14
DATE PLOTTED => 20-AUG-2014
TIME PLOTTED => 10:33

Dist	COUNTY	ROUTE	POST MILES TOTAL PROJECT	SHEET No.	TOTAL SHEETS
06	Ker	178	100.6/102.7	42	54

REGISTERED CIVIL ENGINEER 02/13/14 DATE

6-23-14
PLANS APPROVAL DATE

REGISTERED PROFESSIONAL ENGINEER MITCHELL NGO No. 18920 Exp. 12/31/15 CIVIL STATE OF CALIFORNIA

THE STATE OF CALIFORNIA OR ITS OFFICERS OR AGENTS SHALL NOT BE RESPONSIBLE FOR THE ACCURACY OR COMPLETENESS OF SCANNED COPIES OF THIS PLAN SHEET.

NOTES:

1. COIL 6′ OF DLC IN Exist CENSUS CABINET.
2. DETECTOR LOOPS MUST HAVE 4 TURNS.
3. ADJUST PB TO FG.
4. COIL 6′ OF DETECTOR LOOP WIRE IN Exist CENSUS CABINET.

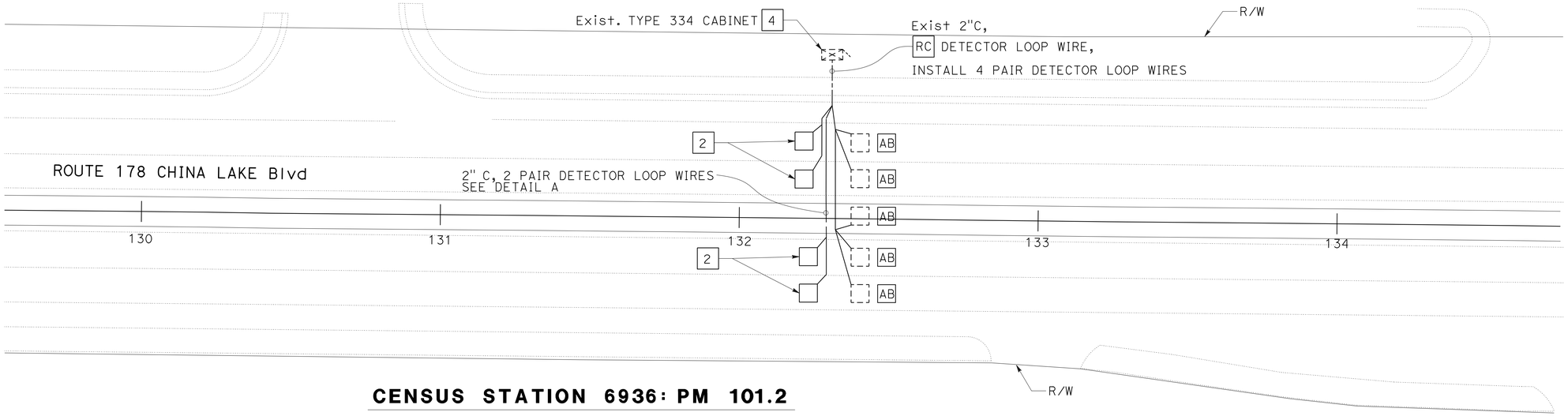

CENSUS STATION 6936: PM 101.2

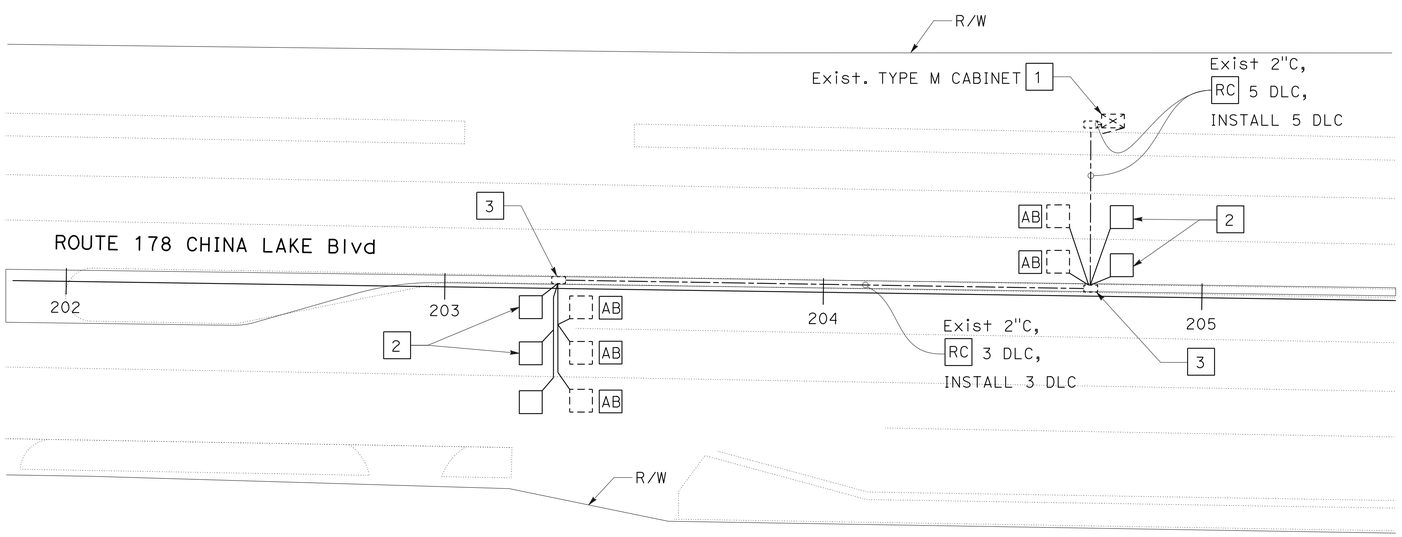

CENSUS STATION 6980: PM 102.6

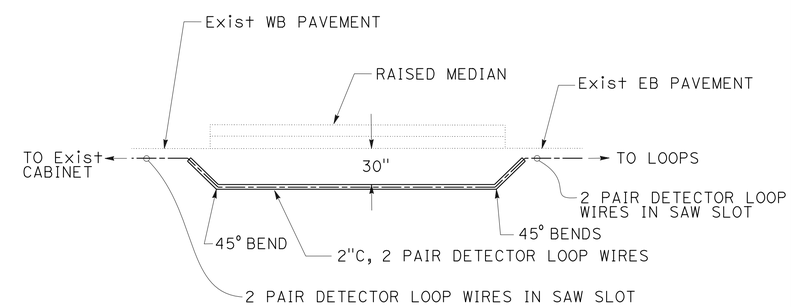

DETAIL A

NO SCALE

APPROVED FOR ELECTRICAL WORK ONLY.

DETECTOR LOOP

SCALE:1"=20′ **E-2**

STATE OF CALIFORNIA - DEPARTMENT OF TRANSPORTATION
Caltrans® TRAFFIC OPERATIONS

FUNCTIONAL SUPERVISOR: TERRY ERLWEIN
CALCULATED-DESIGNED BY: MITCHELL NGO
CHECKED BY: RANDY WEICHE
REVISED BY / DATE REVISED

LAST REVISION 06-24-14
DATE PLOTTED => 20-AUG-2014
TIME PLOTTED => 10:33

Dist	COUNTY	ROUTE	POST MILES TOTAL PROJECT	SHEET No.	TOTAL SHEETS
06	Ker	178	100.6/102.7	43	54

REGISTERED CIVIL ENGINEER 02/13/14 DATE

6-23-14
PLANS APPROVAL DATE

REGISTERED PROFESSIONAL ENGINEER MITCHELL NGO No. 18920 Exp. 12/31/15 CIVIL STATE OF CALIFORNIA

THE STATE OF CALIFORNIA OR ITS OFFICERS OR AGENTS SHALL NOT BE RESPONSIBLE FOR THE ACCURACY OR COMPLETENESS OF SCANNED COPIES OF THIS PLAN SHEET.

NOTE:

ITEMS SHOWN IN TABLES ARE NOT A SEPERATE PAY ITEM, FOR INFORMATION ONLY.

MODIFY SIGNAL

SHEET No.	CONDUIT COUPLING
	EA
E-1	2

DETECTOR LOOP

SHEET No.	TYPE A DETECTOR LOOP	DLC	2" CONDUIT
	EA	LF	
E-2	9	650	20

ELECTRICAL QUANTITIES

NO SCALE **E-3**

REVISED BY | DATE REVISED

MITCHELL NGO | PHIL GRAHAM

CALCULATED-DESIGNED BY | CHECKED BY

FUNCTIONAL SUPERVISOR: TERRY ERLWEIN

STATE OF CALIFORNIA - DEPARTMENT OF TRANSPORTATION

Caltrans® TRAFFIC OPERATIONS

LAST REVISION 06-23-14 | DATE PLOTTED => 20-AUG-2014 TIME PLOTTED => 10:33

M

Maint	MAINTENANCE
Max	MAXIMUM
MB	METAL BEAM
MBB	METAL BEAM BARRIER
MBGR	METAL BEAM GUARD RAILING
Med	MEDIAN
MGS	MIDWEST GUARDRAIL SYSTEM
MH	MANHOLE
Min	MINIMUM
Misc	MISCELLANEOUS
Misc I & S	MISCELLANEOUS IRON AND STEEL
Mkr	MARKER
Mod	MODIFIED, MODIFY
Mon	MONUMENT
MP	METAL PLATE
MPGR	METAL PLATE GUARD RAILING
MR	MOVEMENT RATING
MSE	MECHANICALLY STABILIZED EMBANKMENT
Mt	MOUNTAIN, MOUNT
Mtl	MATERIAL
MVP	MAINTENANCE VEHICLE PULLOUT

N

N	NORTH
NB	NORTHBOUND
No.	NUMBER (MUST HAVE PERIOD)
Nos.	NUMBERS (MUST HAVE PERIOD)
NPS	NOMINAL PIPE SIZE
NS	NEAR SIDE
NSP	NEW STANDARD PLAN
NTS	NOT TO SCALE

O

Oblr	OBLITERATE
OC	OVERCROSSING
OD	OUTSIDE DIAMETER
OF	OUTSIDE FACE
OG	ORIGINAL GROUND
OGAC	OPEN GRADED ASPHALT CONCRETE
OGFC	OPEN GRADED FRICTION COURSE
OH	OVERHEAD
OHWM	ORDINARY HIGH WATER MARK
O-O	OUT TO OUT
Opp	OPPOSITE
OSD	OVERSIDE DRAIN

P

P	PAGE
PAP	PERFORATED ALUMINUM PIPE
PB	PULL BOX
PC	POINT OF CURVATURE, PRECAST
PCC	POINT OF COMPOUND CURVE, PORTLAND CEMENT CONCRETE
PCMS	PORTABLE CHANGEABLE MESSAGE SIGN
PCP	PERFORATED CONCRETE PIPE, PRESTRESSED CONCRETE PIPE
PCVC	POINT OF COMPOUND VERTICAL CURVE
PEC	PERMIT TO ENTER AND CONSTRUCT
Ped	PEDESTRIAN
Ped OC	PEDESTRIAN OVERCROSSING
Ped UC	PEDESTRIAN UNDERCROSSING
Perm Mtl	PERMEABLE MATERIAL

P continued

PG	PROFILE GRADE
PI	POINT OF INTERSECTION
PJP	PARTIAL JOINT PENETRATION
Pkwy	PARKWAY
ℙ,PL	PLATE
P/L	PROPERTY LINE
PM	POST MILE, TIME FROM NOON TO MIDNIGHT
PN	PAVING NOTCH
POC	POINT OF HORIZONTAL CURVE
POT	POINT OF TANGENT
POVC	POINT OF VERTICAL CURVE
PP	PIPE PILE, PLASTIC PIPE, POWER POLE
PPL	PREFORMED PERMEABLE LINER
PPP	PERFORATED PLASTIC PIPE
PRC	POINT OF REVERSE CURVE
PRF	PAVEMENT REINFORCING FABRIC
PRVC	POINT OF REVERSE VERTICAL CURVE
PS&E	PLANS, SPECIFICATIONS AND ESTIMATES
PS, P/S	PRESTRESSED
PSP	PERFORATED STEEL PIPE
PT	POINT OF TANGENCY
PVC	POLYVINYL CHLORIDE
Pvmt	PAVEMENT

Q

Qty	QUANTITY

R

R	RADIUS
R & D	REMOVE AND DISPOSE
R & S	REMOVE AND SALVAGE
R/C	RATE OF CHANGE
RCA	REINFORCED CONCRETE ARCH
RCB	REINFORCED CONCRETE BOX
RCP	REINFORCED CONCRETE PIPE
RCPA	REINFORCED CONCRETE PIPE ARCH
Rd	ROAD
Reinf	REINFORCED, REINFORCEMENT, REINFORCING
Rel	RELOCATE
Repl	REPLACEMENT
Ret	RETAINING
Rev	REVISED, REVISION
Rdwy	ROADWAY
RHMA	RUBBERIZED HOT MIX ASPHALT
Riv	RIVER
RM	ROAD-MIXED
RP	RADIUS POINT, REFERENCE POINT
RR	RAILROAD
RSP	ROCK SLOPE PROTECTION, REVISED STANDARD PLAN
Rt	RIGHT
Rte	ROUTE
RW	REDWOOD, RETAINING WALL
R/W	RIGHT OF WAY
Rwy	RAILWAY

S

S	SOUTH, SUPPLEMENT
SAE	STRUCTURE APPROACH EMBANKMENT
Salv	SALVAGE
SAPP	STRUCTURAL ALUMINUM PLATE PIPE
SB	SOUTHBOUND
SC	SAND CUSHION
SCSP	SLOTTED CORRUGATED STEEL PIPE
SD	STORM DRAIN
Sec	SECOND, SECTION
Sep	SEPARATION
SG	SUBGRADE
Shld	SHOULDER
Sht	SHEET
Sim	SIMILAR
₤	STATION LINE
SM	SELECTED MATERIAL
Spec	SPECIAL, SPECIFICATIONS
SPP	SLOTTED PLASTIC PIPE
SS	SLOPE STAKE
SSBM	STRAP AND SADDLE BRACKET METHOD
SSD	STRUCTURAL SECTION DRAIN
SSPA	STRUCTURAL STEEL PLATE ARCH
SSPP	STRUCTURAL STEEL PLATE PIPE
SSPPA	STRUCTURAL STEEL PLATE PIPE ARCH
SSRP	STEEL SPIRAL RIB PIPE
St	STREET
Sta	STATION
STBB	SINGLE THRIE BEAM BARRIER
Std	STANDARD
Str	STRUCTURE
Surf	SURFACING
SW	SIDEWALK, SOUND WALL
Swr	SEWER
Sym	SYMMETRICAL
S4S	SURFACE 4 SIDES

T

T	SEMI-TANGENT
Tan	TANGENT
TBB	THRIE BEAM BARRIER
Tbr	TIMBER
TC	TOP OF CURB
TCB	TRAFFIC CONTROL BOX
TCE	TEMPORARY CONSTRUCTION EASEMENT
Tel	TELEPHONE
Temp	TEMPORARY
TG	TOP OF GRADE
Tot	TOTAL
TP	TELEPHONE POLE
TPB	TREATED PERMEABLE BASE
TPM	TREATED PERMEABLE MATERIAL
Trans	TRANSITION

T continued

TS	TRANSVERSE, TRAFFIC SIGNAL, TUBULAR STEEL
Typ	TYPICAL

U

UC	UNDERCROSSING
UD	UNDERDRAIN
UG	UNDERGROUND
UON	UNLESS OTHERWISE NOTED
UP	UNDERPASS

V

V	VALVE, DESIGN SPEED
Var	VARIABLE, VARIES
VC	VERTICAL CURVE
VCP	VITRIFIED CLAY PIPE
Vert	VERTICAL
Via	VIADUCT
Vol	VOLUME

W

W	WEST, WIDTH
WB	WESTBOUND
WH	WEEP HOLE
WM	WIRE MESH
WS	WATER SURFACE
WSP	WELDED STEEL PIPE
Wt	WEIGHT
WV	WATER VALVE
WW	WINGWALL
WWLOL	WINGWALL LAYOUT LINE

X

X Sec	CROSS SECTION
Xing	CROSSING

Y

Yr	YEAR
Yrs	YEARS

Dist	COUNTY	ROUTE	POST MILES TOTAL PROJECT	SHEET No.	TOTAL SHEETS
06	Ker	178	100.6/102.7	44	54

Grace M. Tsushima
REGISTERED CIVIL ENGINEER

July 19, 2013
PLANS APPROVAL DATE

REGISTERED PROFESSIONAL ENGINEER
Grace M. Tsushima
No. C49814
Exp. 9-30-14
CIVIL
STATE OF CALIFORNIA

THE STATE OF CALIFORNIA OR ITS OFFICERS OR AGENTS SHALL NOT BE RESPONSIBLE FOR THE ACCURACY OR COMPLETENESS OF SCANNED COPIES OF THIS PLAN SHEET.

TO ACCOMPANY PLANS DATED 6-23-14

2010 REVISED STANDARD PLAN RSP A10B

UNIT OF MEASUREMENT SYMBOLS:

Some of the symbols used in the project plan quantity tables and in the Bid Item List are:

TABLE A

SYMBOL USED	DEFINITIONS
ACRE	ACRE
CF	CUBIC FOOT
CY	CUBIC YARD
EA	EACH
GAL	GALLON
LB	POUND
LF	LINEAR FOOT
SQFT	SQUARE FOOT
SQYD	SQUARE YARD
STA	100 FEET
TAB	TABLET
TON	2,000 POUNDS

Some of the symbols used in the plans other than in the project plan quantity tables are:

TABLE B

SYMBOL USED	DEFINITIONS
ksi	KIPS PER SQUARE INCH
ksf	KIPS PER SQUARE FOOT
psi	POUNDS PER SQUARE INCH
psf	POUNDS PER SQUARE FOOT
lb/ft^3, pcf	POUNDS PER CUBIC FOOT
tsf	TONS PER SQUARE FOOT
mph, MPH *	MILES PER HOUR
ø	NOMINAL DIAMETER
oz	OUNCE
lb	POUND
kip	1,000 POUNDS
cal	CALORIE
ft	FOOT OR FEET
gal	GALLON

* For use on a sign panel only

STATE OF CALIFORNIA
DEPARTMENT OF TRANSPORTATION

ABBREVIATIONS (SHEET 2 OF 2)

NO SCALE

RSP A10B DATED JULY 19, 2013 SUPERSEDES STANDARD PLAN A10B DATED MAY 20, 2011 - PAGE 2 OF THE STANDARD PLANS BOOK DATED 2010.

REVISED STANDARD PLAN RSP A10B

6-7-13

Dist	COUNTY	ROUTE	POST MILES TOTAL PROJECT	SHEET No.	TOTAL SHEETS
06	Ker	178	100.6/102.7	45	54

REGISTERED CIVIL ENGINEER

July 19, 2013
PLANS APPROVAL DATE

REGISTERED PROFESSIONAL ENGINEER Michael Janzen No. 44788 Exp. 03-31-14 CIVIL STATE OF CALIFORNIA

THE STATE OF CALIFORNIA OR ITS OFFICERS OR AGENTS SHALL NOT BE RESPONSIBLE FOR THE ACCURACY OR COMPLETENESS OF SCANNED COPIES OF THIS PLAN SHEET.

TO ACCOMPANY PLANS DATED 6-23-14

2010 REVISED STANDARD PLAN RSP A87A

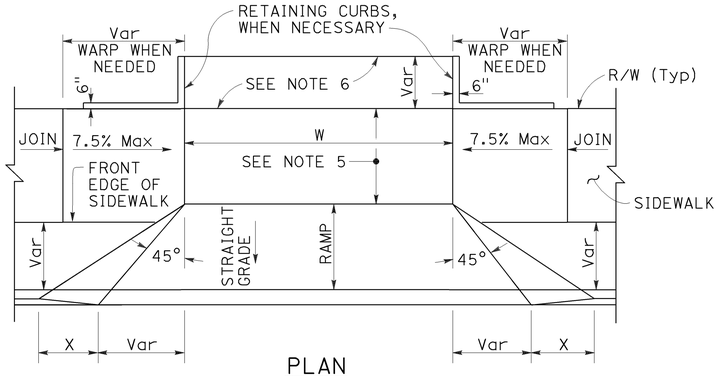

PLAN

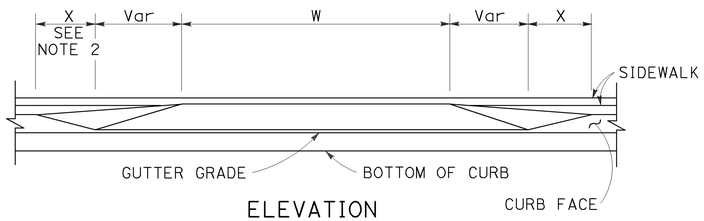

ELEVATION

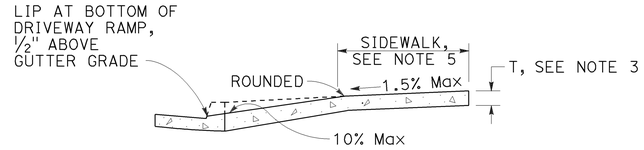

CASE A

Typical driveway, sidewalk not depressed

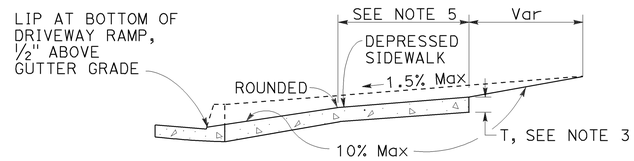

CASE B

Driveway with depressed sidewalk

SECTIONS

DRIVEWAYS

TABLE A

CURB TYPE	DIMENSIONS			
	"H1"	"H2"	"W1"	"W2"
A1-6	1'-2"	6"	7½"	1½"
A1-8	1'-4"	8"	8"	2"
A2-6	1'-0"	6"	2'-7½"	1½"
A2-8	1'-2"	8"	2'-8"	2"
A3-6	6"	5"	7¼"	1¼"
A3-8	8"	7"	7¾"	1¾"
B1-4	1'-0"	4"	7½"	2½"
B1-6	1'-2"	6"	9"	4"
B2-4	10"	4"	2'-7½"	2½"
B2-6	1'-0"	6"	2'-9"	4"
B3-4	4"	3"	7"	2"
B3-6	6"	5"	8½"	3½"
D-4	10"	4"	1'-6"	1'-1"
D-6	1'-0"	6"	2'-2"	1'-9"

CURB QUANTITIES

TYPE	CUBIC YARDS PER LINEAR FOOT
A1-6	0.02585
A1-8	0.03084
A2-6	0.05903
A2-8	0.06379
A3-6	0.01036
A3-8	0.01435
B1-4	0.02185
B1-6	0.02930
B2-4	0.05515
B2-6	0.06171
B3-4	0.00641
B3-6	0.01074
B4	0.05709
D-4	0.04083
D-6	0.06804
E	0.06661

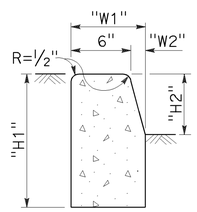

TYPE A1 CURBS

See Table A

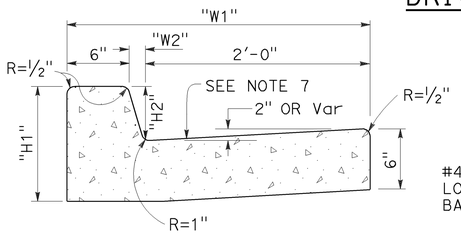

TYPE A2 CURBS

See Table A

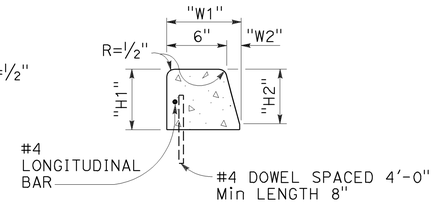

TYPE A3 CURBS

Superimposed on existing pavement
See Table A

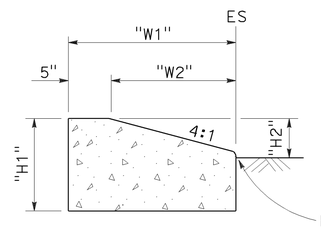

TYPE D CURBS

See Table A

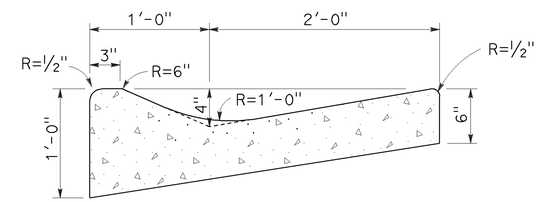

TYPE E CURB

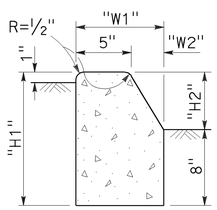

TYPE B1 CURBS

See Table A

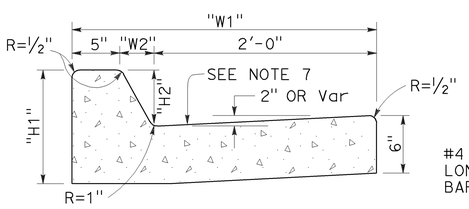

TYPE B2 CURBS

See Table A

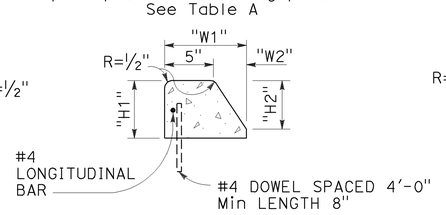

TYPE B3 CURBS

Superimposed on existing pavement
See Table A

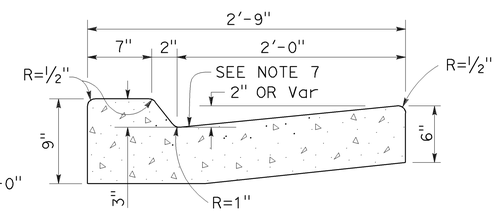

TYPE B4 CURBS

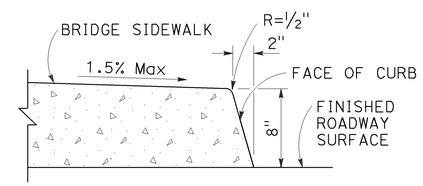

TYPE H CURB

On Bridges

CURBS

NOTES:

1. Case A driveway section typically applies.
2. X=3'-0" except for curb heights over 10" where 4:1 slopes shall be used on curb slope.
3. Sidewalk and ramp thickness "T" at driveway shall be 4" for residental and 6" for commercial.
4. Difference in slope of the driveway ramp and the slope of a line between the gutter and a point on the roadway 5'-0" from gutter line shall not exceed 15%. Reduce driveway ramp slope, not gutter slope, where required.
5. Minimum width of clear passageway for sidewalk shall be 4'-2".
6. Retaining curbs and acquisition of construction easement may be necessary for narrow sidewalks or curb heights in excess of 6".
7. Across the pedestrian route at curb ramp locations, the gutter pan slope shall not exceed 1" of depth for each 2'-0" of width.

STATE OF CALIFORNIA
DEPARTMENT OF TRANSPORTATION

CURBS AND DRIVEWAYS

NO SCALE

RSP A87A DATED JULY 19, 2013 SUPERSEDES STANDARD PLAN A87A
DATED MAY 20, 2011 - PAGE 119 OF THE STANDARD PLANS BOOK DATED 2010.

REVISED STANDARD PLAN RSP A87A

7-8-13

Dist	COUNTY	ROUTE	POST MILES TOTAL PROJECT	SHEET No.	TOTAL SHEETS
06	Ker	178	100.6/102.7	46	54

REGISTERED CIVIL ENGINEER

July 19, 2013
PLANS APPROVAL DATE

REGISTERED PROFESSIONAL ENGINEER
Gurinderpal Bhullar
No. C48815
Exp. 9-30-14
CIVIL
STATE OF CALIFORNIA

THE STATE OF CALIFORNIA OR ITS OFFICERS OR AGENTS SHALL NOT BE RESPONSIBLE FOR THE ACCURACY OR COMPLETENESS OF SCANNED COPIES OF THIS PLAN SHEET.

TO ACCOMPANY PLANS DATED 6-23-14

2010 REVISED STANDARD PLAN RSP T9

TABLE 1

TAPER LENGTH CRITERIA AND CHANNELIZING DEVICE SPACING

SPEED (S)	MINIMUM TAPER LENGTH * FOR WIDTH OF OFFSET 12 FEET (W)				MAXIMUM CHANNELIZING DEVICE SPACING		
					X	Y	Z **
	TANGENT 2L	MERGING L	SHIFTING L/2	SHOULDER L/3	TAPER	TANGENT	CONFLICT
mph	ft	ft	ft	ft	ft	ft	ft
20	160	80	40	27	20	40	10
25	250	125	63	42	25	50	12
30	360	180	90	60	30	60	15
35	490	245	123	82	35	70	17
40	640	320	160	107	40	80	20
45	1080	540	270	180	45	90	22
50	1200	600	300	200	50	100	25
55	1320	660	330	220	55	110	27
60	1440	720	360	240	60	120	30
65	1560	780	390	260	65	130	32
70	1680	840	420	280	70	140	35

* - For other offsets, use the following merging taper length formula for L:
For speed of 40 mph or less, $L = WS^2/60$
For speed of 45 mph or more, $L = WS$

Where: L = Taper length in feet
W = Width of offset in feet
S = Posted speed limit, off-peak 85th-percentile speed prior to work starting, or the anticipated operating speed in mph

** - Use for taper and tangent sections where there are no pavement markings or where there is a conflict between existing pavement markings and channelizers (CA).

TABLE 2

LONGITUDINAL BUFFER SPACE AND FLAGGER STATION SPACING

SPEED *	Min D **	DOWNGRADE Min D ***		
		-3%	-6%	-9%
mph	ft	ft	ft	ft
20	115	116	120	126
25	155	158	165	173
30	200	205	215	227
35	250	257	271	287
40	305	315	333	354
45	360	378	400	427
50	425	446	474	507
55	495	520	553	593
60	570	598	638	686
65	645	682	728	785
70	730	771	825	891

* - Speed is posted speed limit, off-peak 85th-percentile speed prior to work starting, or the anticipated operating speed in mph

** - Longitudinal buffer space or flagger station spacing

*** - Use on sustained downgrade steeper than -3 percent and longer than 1 mile.

TABLE 3

ADVANCE WARNING SIGN SPACING

ROAD TYPE	DISTANCE BETWEEN SIGNS *		
	A	B	C
	ft	ft	ft
URBAN - 25 mph OR LESS	100	100	100
URBAN - MORE THAN 25 mph TO 40 mph	250	250	250
URBAN - MORE THAN 40 mph	350	350	350
RURAL	500	500	500
EXPRESSWAY / FREEWAY	1000	1500	2640

* - The distances are approximate, are intended for guidance purposes only, and should be applied with engineering judgment. These distances should be adjusted by the Engineer for field conditions, if necessary, by increasing or decreasing the recommmended distances.

STATE OF CALIFORNIA
DEPARTMENT OF TRANSPORTATION

TRAFFIC CONTROL SYSTEM TABLES FOR LANE AND RAMP CLOSURES

NO SCALE

RSP T9 DATED JULY 19, 2013 SUPERSEDES RSP T9 DATED APRIL 19, 2013 THAT SUPPLEMENTS THE STANDARD PLANS BOOK DATED 2010.

REVISED STANDARD PLAN RSP T9

4-30-13

Dist	COUNTY	ROUTE	POST MILES TOTAL PROJECT	SHEET No.	TOTAL SHEETS
06	Ker	178	100.6/102.7	47	54

REGISTERED CIVIL ENGINEER

April 19, 2013
PLANS APPROVAL DATE

REGISTERED PROFESSIONAL ENGINEER Gurinderpal Bhullar No. C48815 Exp. 9-30-14 CIVIL STATE OF CALIFORNIA

THE STATE OF CALIFORNIA OR ITS OFFICERS OR AGENTS SHALL NOT BE RESPONSIBLE FOR THE ACCURACY OR COMPLETENESS OF SCANNED COPIES OF THIS PLAN SHEET.

TO ACCOMPANY PLANS DATED 6-23-14

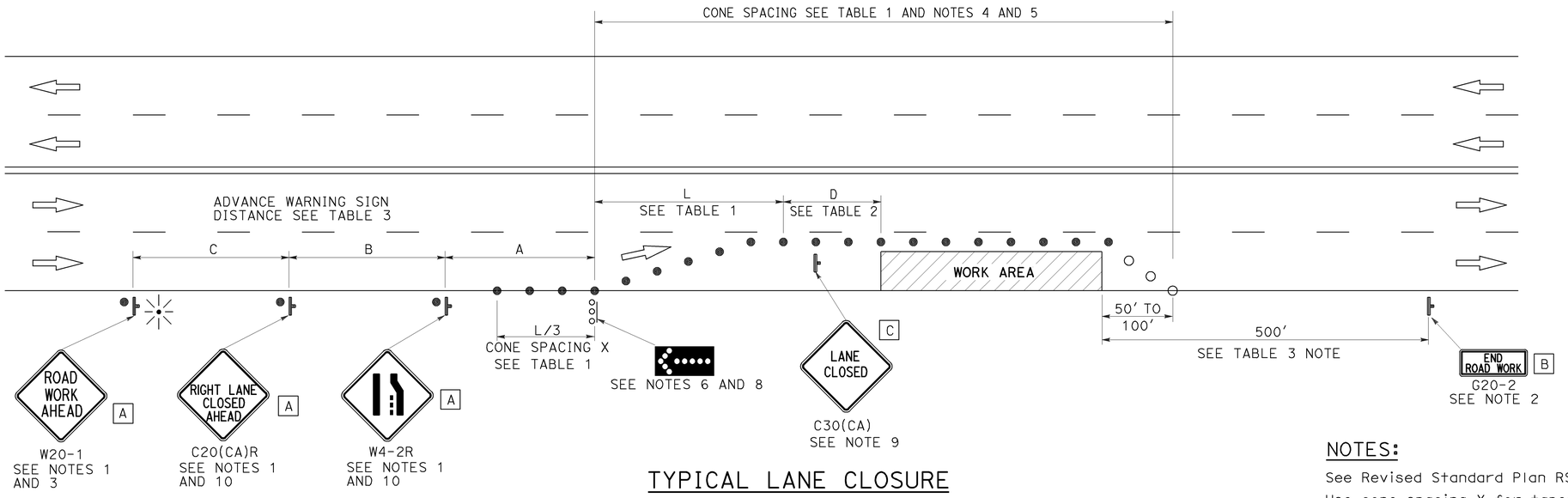

TYPICAL LANE CLOSURE

NOTES:

See Revised Standard Plan RSP T9 for tables.

Use cone spacing X for taper segment, Y for tangent segment or Z for conflict situations, as approriate, per Table 1, unless X, Y, or Z cone spacing is shown on this sheet.

Unless otherwise specified in the special provisions, all temporary warning signs shall have black legend on fluorescent orange background.

California codes are designated by (CA). Otherwise, Federal (MUTCD) codes are shown.

LEGEND

- TRAFFIC CONE
- TRAFFIC CONE (OPTIONAL TAPER)
- TEMPORARY TRAFFIC CONTROL SIGN
- FLASHING ARROW SIGN (FAS)
- FAS SUPPORT OR TRAILER
- PORTABLE FLASHING BEACON

SIGN PANEL SIZE (Min)

A	48" x 48"
B	36" x 18"
C	30" x 30"

NOTES:

1. Each advance warning sign shall be equipped with at least two flags for daytime closure. Each flag shall be at least 16" x 16" in size and shall be orange or fluorescent red-orange in color. Flashing beacons shall be placed at the locations indicated for lane closure during hours of darkness.
2. A G20-2 "END ROAD WORK" sign, as appropriate, shall be placed at the end of the lane closure unless the end of work area is obvious, or ends within a larger project's limits.
3. If the W20-1 sign would follow within 2000' of a stationary W20-1 or G20-1 "ROAD WORK NEXT _____ MILES", use a C20(CA) sign for the first advance warning sign.
4. All cones used for lane closures during the hours of darkness shall be fitted with retroreflective bands (or sleeves) as specified in the specifications.
5. Portable delineators, placed at one-half the spacing indicated for traffic cones, may be used instead of cones for daytime closures only.
6. Flashing arrow sign shall be either Type I or Type II.
7. For approach speeds over 50 mph, use the "Traffic Control System for Lane Closure On Freeways And Expressways" plan for lane closure details and requirements.
8. A minimum 1500' of sight distance shall be provided where possible for vehicles approaching the first flashing arrow sign. Lane closures shall not begin at the top of crest vertical curve or on a horizontal curve.
9. Place a C30(CA) sign every 2000' throughout length of lane closure.
10. Median lane closures shall conform to the details as shown except that C20(CA)L and W4-2L signs shall be used.
11. At least one person shall be assigned to provide full time maintenance of traffic control devices for lane closure unless, otherwise directed by the Engineer.

STATE OF CALIFORNIA
DEPARTMENT OF TRANSPORTATION

TRAFFIC CONTROL SYSTEM FOR LANE CLOSURE ON MULTILANE CONVENTIONAL HIGHWAYS

NO SCALE

RSP T11 DATED APRIL 19, 2013 SUPERSEDES STANDARD PLAN T11 DATED MAY 20, 2011 - PAGE 239 OF THE STANDARD PLANS BOOK DATED 2010.

REVISED STANDARD PLAN RSP T11

2010 REVISED STANDARD PLAN RSP T11

4-2-13

Dist	COUNTY	ROUTE	POST MILES TOTAL PROJECT	SHEET No.	TOTAL SHEETS
06	Ker	178	100.6/102.7	48	54

REGISTERED CIVIL ENGINEER

April 19, 2013
PLANS APPROVAL DATE

REGISTERED PROFESSIONAL ENGINEER Gurinderpal Bhullar No. C48815 Exp. 9-30-14 CIVIL STATE OF CALIFORNIA

THE STATE OF CALIFORNIA OR ITS OFFICERS OR AGENTS SHALL NOT BE RESPONSIBLE FOR THE ACCURACY OR COMPLETENESS OF SCANNED COPIES OF THIS PLAN SHEET.

TO ACCOMPANY PLANS DATED 6-23-14

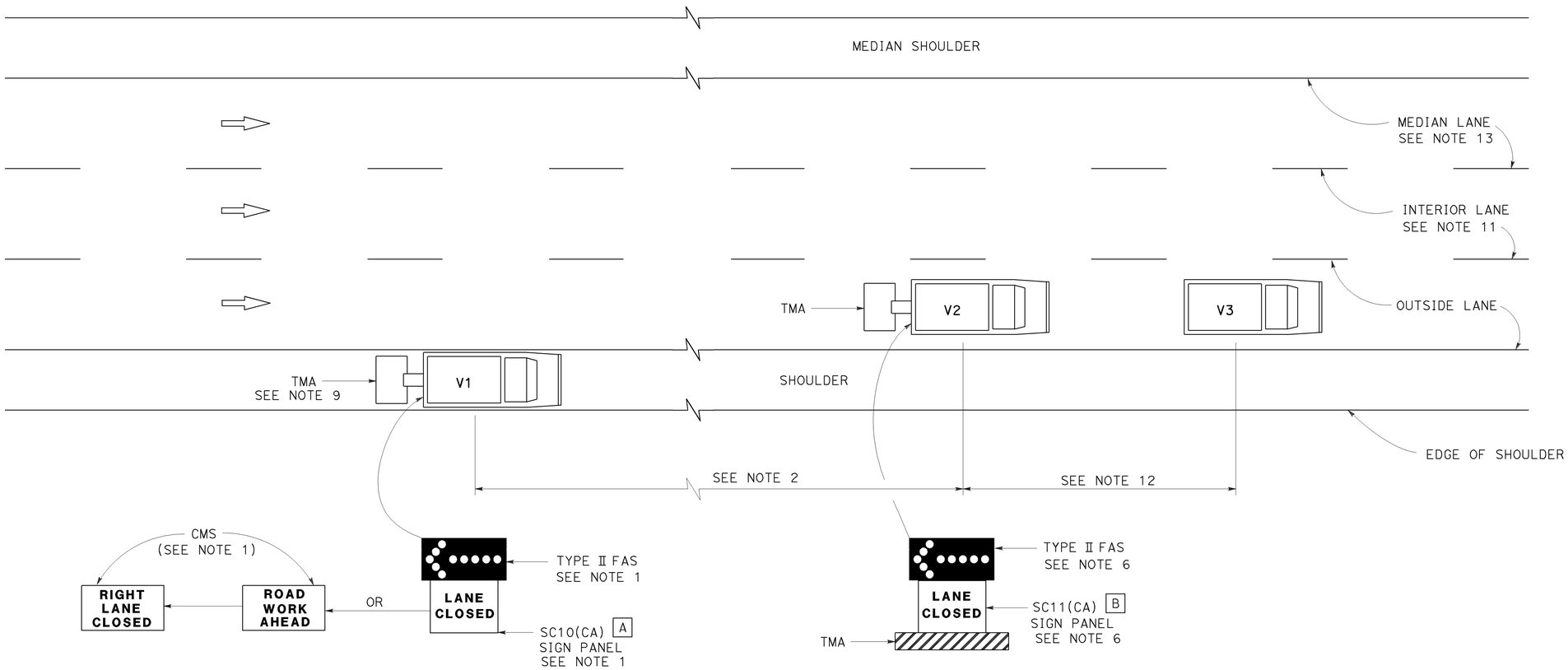

MOVING LANE CLOSURE ON MEDIAN LANE OR OUTSIDE LANE OF MULTILANE HIGHWAYS

SIGN PANEL SIZE (Min)

A 66" x 36"

B 54" x 42"

LEGEND

V1	SIGN VEHICLE
V2	SHADOW VEHICLE
V3	WORK/APPLICATION VEHICLE
	FLASHING ARROW SIGN (FAS)
CMS	CHANGEABLE MESSAGE SIGN
TMA	TRUCK-MOUNTED ATTENUATOR

NOTES:

1. Either a changeable message sign or a SC10(CA) sign panel and a Type II flashing arrow sign shall be mounted on the rear of sign vehicle V1. The changeable message sign shall be sequenced to show the "ROAD WORK AHEAD" message first, followed by the "RIGHT LANE CLOSED" message. For median lane closure, the flashing arrow symbol shall be reversed with the arrowhead on the right and the changeable message sign shall show "LEFT LANE CLOSED".
2. If traffic queues develop, sign vehicle V1 should be positioned upstream from the end of queue. Sign vehicle V1 shall be positioned where highly visible when shoulders are not available.
3. A minimum sight distance of 1500′ should be provided in advance of sign vehicle V1.
4. Sign vehicle V1 should remain at the beginning of horizontal or vertical curves until the other vehicles (V2 and V3) are far enough beyond the curve to resume the minimum sight distance of 1500′.
5. Vehicle-mounted sign panels shall have Type III or above retroreflective sheeting, black on white, or black on fluorescent orange, with 6" minimum series D letters per Caltrans sign specifications.
6. Shadow vehicle V2 shall be equipped with a truck-mounted attenuator. The sign panel shown and a Type II flashing arrow sign shall be mounted on the rear of shadow vehicle V2. For median lane closure the flashing arrow sign symbol shall be displayed with the arrowhead on the right.
7. All vehicles used for lane closures shall be equipped with two-way radios, and the vehicle operators shall maintain communication during the work or application operation.
8. All vehicles shall be equipped with flashing or rotating amber lights.
9. If sign vehicle V1 encroaches into the traffic lane due to insufficient shoulder width, sign vehicle V1 shall be equipped with a truck-mounted attenuator. Sign vehicle V1 shall stay as close to the edge of shoulder as practicable.
10. Where workers would be on foot in the work area, a stationary type lane closure (Revised Standard Plan T10, T11, etc., as applicable) shall be used instead of this plan.
11. For moving lane closure on interior lane of multilane highways, use Revised Standard Plan T16.
12. The spacing between work vehicle(s) and the shadow vehicles, and between each shadow vehicle should be minimized to deter road users from driving in between.
13. When the work/application vehicle V3 occupies the median lane, sign vehicle V1 should drive in the median shoulder and indicate left lane closed ahead.

STATE OF CALIFORNIA
DEPARTMENT OF TRANSPORTATION

TRAFFIC CONTROL SYSTEM FOR MOVING LANE CLOSURE ON MULTILANE HIGHWAYS

NO SCALE

RSP T15 DATED APRIL 19, 2013 SUPERSEDES STANDARD PLAN T15
DATED MAY 20, 2011 - PAGE 243 OF THE STANDARD PLANS BOOK DATED 2010.

REVISED STANDARD PLAN RSP T15

2010 REVISED STANDARD PLAN RSP T15

12-18-12

Dist	COUNTY	ROUTE	POST MILES TOTAL PROJECT	SHEET No.	TOTAL SHEETS
06	Ker	178	100.6/102.7	49	54

REGISTERED CIVIL ENGINEER

April 19, 2013
PLANS APPROVAL DATE

REGISTERED PROFESSIONAL ENGINEER Gurinderpal Bhullar No. C48815 Exp. 9-30-14 CIVIL STATE OF CALIFORNIA

THE STATE OF CALIFORNIA OR ITS OFFICERS OR AGENTS SHALL NOT BE RESPONSIBLE FOR THE ACCURACY OR COMPLETENESS OF SCANNED COPIES OF THIS PLAN SHEET.

TO ACCOMPANY PLANS DATED 6-23-14

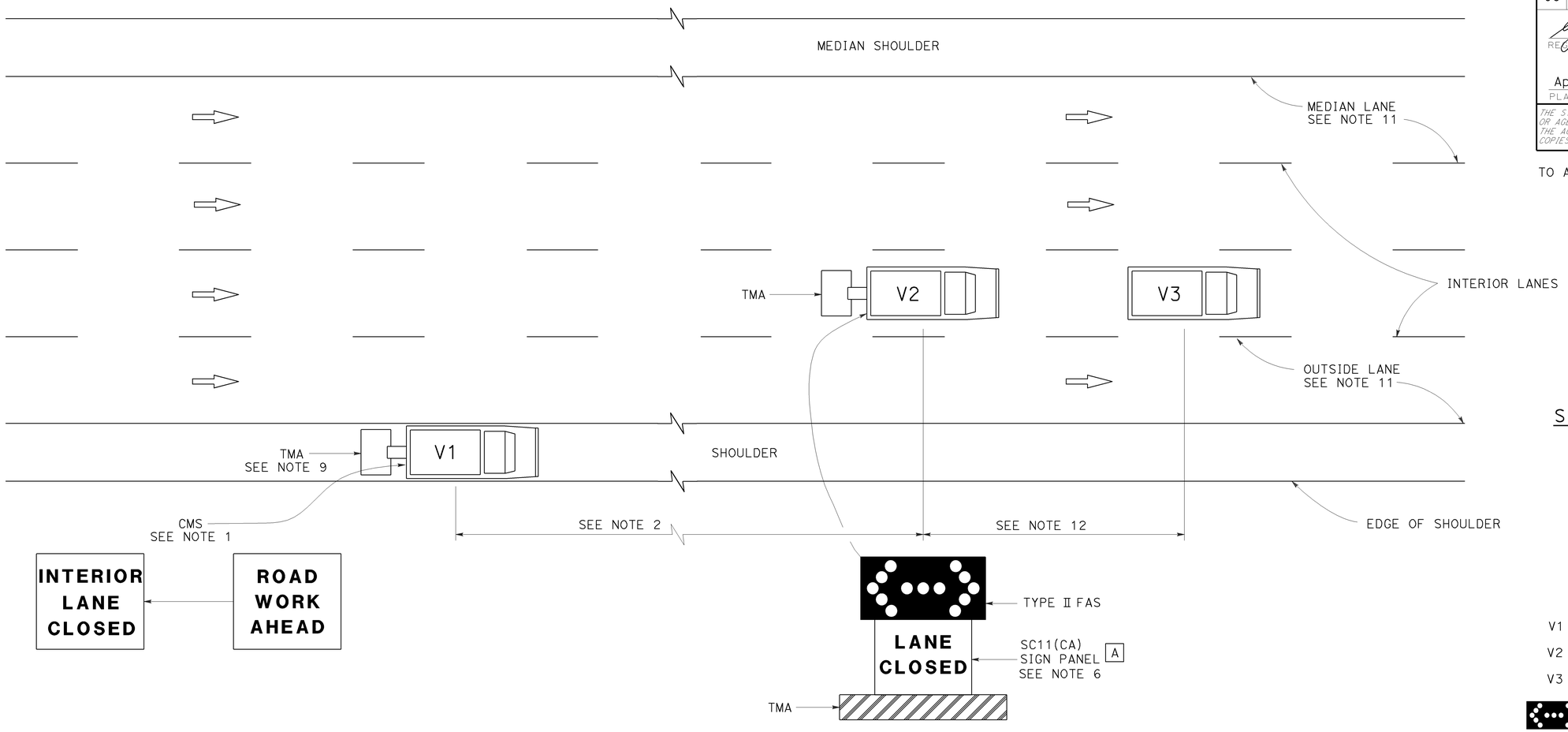

MOVING LANE CLOSURE ON INTERIOR LANE OF MULTILANE HIGHWAYS

SIGN PANEL SIZE (Min)

A 54" x 42"

LEGEND

V1	SIGN VEHICLE
V2	SHADOW VEHICLE
V3	WORK/APPLICATION VEHICLE
	FLASHING ARROW SIGN (FAS) IN FLASHING DOUBLE ARROW MODE
CMS	CHANGEABLE MESSAGE SIGN
TMA	TRUCK-MOUNTED ATTENUATOR

NOTES:

1. A changeable message sign shall be mounted on the rear of sign vehicle V1. The changeable message sign shall be sequenced to show the "ROAD WORK AHEAD" message first, followed by the "INTERIOR LANE CLOSED" message. The message "CENTER LANE CLOSED" may be used in place of the "INTERIOR LANE CLOSED" message.
2. If traffic queues develop, sign vehicle V1 should be positioned upstream from the end of queue. Sign vehicle V1 shall be positioned where highly visible when shoulders are not available.
3. A minimum sight distance of 1500′ should be provided in advance of sign vehicle V1.
4. Sign vehicle V1 should remain at the beginning of horizontal or vertical curves until the other vehicles (V2 and V3) are far enough beyond the curve to resume the minimum sight distance of 1500′.
5. Vehicle-mounted sign panels shall have Type III or above retroreflective sheeting, black on white, or black on fluorescent orange, with 6" minimum series D letters per Caltrans sign specifications.
6. Shadow vehicle V2 shall be equipped with a truck-mounted attenuator. The sign panel shown and a Type II flashing arrow sign shall be mounted on the rear of shadow vehicle V2.
7. All vehicles used for lane closures shall be equipped with two-way radios, and the vehicle operators shall maintain communication during the work or application operation.
8. All vehicles shall be equipped with flashing or rotating amber lights.
9. If sign vehicle V1 encroaches into the traffic lane due to insufficient shoulder width, sign vehicle V1 shall be equipped with a truck-mounted attenuator. Sign vehicle V1 shall stay as close to the edge of shoulder as practicable.
10. Where workers would be on foot in the work area, a stationary type lane closure (Revised Standard Plan T10, T11 etc., as applicable) shall be used instead of this plan.
11. For moving lane closure on median lane or outside lane of multilane highways, use Revised Standard Plan T15.
12. The spacing between work vehicle(s) and the shadow vehicles, and between each shadow vehicle should be minimized to deter road users from driving in between.

STATE OF CALIFORNIA
DEPARTMENT OF TRANSPORTATION

TRAFFIC CONTROL SYSTEM FOR MOVING LANE CLOSURE ON MULTILANE HIGHWAYS

NO SCALE

RSP T16 DATED APRIL 19, 2013 SUPERSEDES STANDARD PLAN T16 DATED MAY 20, 2011 - PAGE 244 OF THE STANDARD PLANS BOOK DATED 2010.

REVISED STANDARD PLAN RSP T16

2010 REVISED STANDARD PLAN RSP T16

12-18-12

Dist	COUNTY	ROUTE	POST MILES TOTAL PROJECT	SHEET No.	TOTAL SHEETS
06	Ker	178	100.6/102.7	50	54

Theresa Gabriel
REGISTERED ELECTRICAL ENGINEER

July 19, 2013
PLANS APPROVAL DATE

REGISTERED PROFESSIONAL ENGINEER
Theresa Aziz Gabriel
No. E15129
Exp. 6-30-14
ELECTRICAL
STATE OF CALIFORNIA

THE STATE OF CALIFORNIA OR ITS OFFICERS OR AGENTS SHALL NOT BE RESPONSIBLE FOR THE ACCURACY OR COMPLETENESS OF SCANNED COPIES OF THIS PLAN SHEET.

TO ACCOMPANY PLANS DATED 6-23-14

LEGEND:

AB	ABANDON. IF APPLIED TO CONDUIT, REMOVE CONDUCTORS
BC	INSTALL PULL BOX IN EXISTING CONDUIT RUN
BP	PEDESTRIAN BARRICADE, TYPE AS INDICATED ON PLAN
CB	INSTALL CONDUIT INTO EXISTING PULL BOX
CC	CONNECT NEW AND EXISTING CONDUIT. REMOVE EXISTING CONDUCTORS AND INSTALL CONDUCTORS AS INDICATED
CF	CONDUIT TO REMAIN FOR FUTURE USE. REMOVE CONDUCTORS. INSTALL PULL TAPE
DH	DETECTOR HANDHOLE
FA	FOUNDATION TO BE ABANDONED
IS	INSTALL SIGN ON SIGNAL MAST ARM
NS	NO SLIP BASE ON STANDARD
PEC	PHOTOELECTRIC CONTROL
PEU	PHOTOELECTRIC UNIT
RC	EQUIPMENT OR MATERIAL TO BE REMOVED AND BECOME THE PROPERTY OF THE CONTRACTOR
RE	REMOVE ELECTROLIER, FUSES AND BALLAST. TAPE ENDS OF CONDUCTORS
RL	RELOCATE EQUIPMENT
RR	REMOVE AND REUSE EQUIPMENT
RS	REMOVE AND SALVAGE EQUIPMENT
SC	SPLICE NEW TO EXISTING CONDUCTORS
SD	SERVICE DISCONNECT
TSP	TELEPHONE SERVICE POINT

ABBREVIATIONS

APS	ACCESSIBLE PEDESTRIAN SIGNAL
BBS	BATTERY BACKUP SYSTEM
BC	BOLT CIRCLE
BPB	BICYCLE PUSH BUTTON
C	CONDUIT
CB	CIRCUIT BREAKER
CCTV	CLOSED CIRCUIT TELEVISION
Ckt	CIRCUIT
CMS	CHANGEABLE MESSAGE SIGN
Ctid	CALTRANS IDENTIFICATION
Comm	COMMUNICATION
DLC	LOOP DETECTOR LEAD-IN CABLE
EMS	EXTINGUISHABLE MESSAGE SIGN
EVUC	EMERGENCY VEHICLE UNIT CABLE
EVUD	EMERGENCY VEHICLE UNIT DETECTOR
FB	FLASHING BEACON
FBCA	FLASHING BEACON CONTROL ASSEMBLY
FBS	FLASHING BEACON WITH SLIP BASE
FO	FIBER OPTIC
G	EQUIPMENT GROUNDING CONDUCTOR
GB	GROUND BUS
GFCI	GROUND FAULT CIRCUIT INTERRUPTER
HAR	HIGHWAY ADVISORY RADIO
Hex	HEXAGONAL
HPS	HIGH PRESSURE SODIUM
IISNS	INTERNALLY ILLUMINATED STREET NAME SIGN
ISL	INDUCTION SIGN LIGHTING
LED	LIGHT EMITTING DIODE
LMA	LUMINAIRE MAST ARM
LPS	LOW PRESSURE SODIUM
Ltg	LIGHTING
Lum	LUMINAIRE
M	METERED
MAT	MAST ARM MOUNTING TOP ATTACHMENT
MAS	MAST ARM MOUNTING SIDE ATTACHMENT
M/M	MULTIPLE TO MULTIPLE TRANSFORMER
Mtg	MOUNTING
MV	MERCURY VAPOR LIGHTING FIXTURE
MVDS	MICROWAVE VEHICLE DETECTION SYSTEM
N	NEUTRAL (GROUNDED CONDUCTOR)
NB	NEUTRAL BUS
NC	NORMALLY CLOSE
NO	NORMALLY OPEN
P	CIRCUIT BREAKER'S POLE
PB	PULL BOX
PBA	PUSH BUTTON ASSEMBLY
PEC	PHOTOELECTRIC CONTROL
Ped	PEDESTRIAN
PEU	PHOTOELECTRIC UNIT
PT	CONDUIT WITH PULL TAPE
RE	RELOCATED EQUIPMENT
RM	RAMP METERING
RWIS	ROADSIDE WEATHER INFORMATION SYSTEM
SB	SLIP BASE
SIC	SIGNAL INTERCONNECT CABLE
Sig	SIGNAL
SMA	SIGNAL MAST ARM
SNS	STREET NAME SIGN
SP	SERVICE POINT
TDC	TELEPHONE DEMARCATION CABINET
TMS	TRAFFIC MONITORING STATION
TOS	TRAFFIC OPERATIONS SYSTEM
Veh	VEHICLE
VIVDS	VIDEO IMAGE VEHICLE DETECTION SYSTEM
WIM	WEIGH-IN-MOTION
Xfmr	TRANSFORMER

SOFFIT AND WALL MOUNTED LUMINAIRES

PENDANT, 70 W HPS UNLESS OTHERWISE SPECIFIED

FLUSH, 70 W HPS UNLESS OTHERWISE SPECIFIED

WALL SURFACE, 70 W HPS UNLESS OTHERWISE SPECIFIED

EXISTING SOFFIT OR WALL LUMINAIRE TO REMAIN UNMODIFIED

EXISTING SOFFIT OR WALL LUMINAIRE TO BE MODIFIED AS SPECIFIED

NOTE:

Arrow indicates "street side" of luminaire.

COMMONLY USED SYMBOLS FOR UNITED STATES CUSTOMARY UNITS OF MEASUREMENT:

SYMBOL USED	DEFINITIONS
Ω	OHMS
min	MINUTE
s	SECOND
bps	BITS PER SECOND
Bps	BYTES PER SECOND
A	AMPERE
V	VOLT
V(dc)	VOLT (DIRECT CURRENT)
V(ac)	VOLT (ALTERNATING CURRENT)
FC	FOOT - CANDLE
W	WATTS
VA	VOLT-AMPERE
M	MEGA
k	KILO
m	MILLI
μ	MICRO
P	PICO
Hz	HERTZ

MISCELLANEOUS ELECTROLIERS

NEW	EXISTING	
		LUMINAIRE ON WOOD POLE
		NON-STANDARD ELECTROLIER (SEE PROJECT NOTES OR PROJECT PLANS)
		CITY ELECTROLIER
		ELECTROLIER FOUNDATION (FUTURE INSTALLATION)

NOTES:

1. HPS luminaires shall be 310 W HPS when installed on Type 21, 21D, 30, 31 and 32 Standards, unless otherwise specified. HPS luminaires shall be 200 W when installed on other type standards or poles, unless otherwise specified.
2. LED luminaires shall be 235 W when installed on Type 21, 21D, 30, 31 and 32 Standards, unless otherwise specified. LED luminaires shall be 165 W when installed on other type standards or poles, unless otherwise specified.
3. Luminaires shall be the cutoff type, ANSI Type III medium cutoff lighting distribution, unless otherwise specified.

STANDARD ELECTROLIER

NEW	EXISTING	STANDARD TYPE
		15
		15D
		15 STRUCTURE
		15D STRUCTURE
		21
		21D
		21 STRUCTURE
		21D STRUCTURE
		30
		31
		32

STATE OF CALIFORNIA
DEPARTMENT OF TRANSPORTATION

ELECTRICAL SYSTEMS (LEGEND AND ABBREVIATIONS)

NO SCALE

RSP ES-1A DATED JULY 19, 2013 SUPERSEDES STANDARD PLAN ES-1A DATED MAY 20, 2011 - PAGE 425 OF THE STANDARD PLANS BOOK DATED 2010.

REVISED STANDARD PLAN RSP ES-1A

2010 REVISED STANDARD PLAN RSP ES-1A

7-15-13

Dist	COUNTY	ROUTE	POST MILES TOTAL PROJECT	SHEET No.	TOTAL SHEETS
06	Ker	178	100.6/102.7	51	54

Theresa Gabriel
REGISTERED ELECTRICAL ENGINEER

July 19, 2013
PLANS APPROVAL DATE

REGISTERED PROFESSIONAL ENGINEER Theresa Aziz Gabriel No. E15129 Exp. 6-30-14 ELECTRICAL STATE OF CALIFORNIA

THE STATE OF CALIFORNIA OR ITS OFFICERS OR AGENTS SHALL NOT BE RESPONSIBLE FOR THE ACCURACY OR COMPLETENESS OF SCANNED COPIES OF THIS PLAN SHEET.

TO ACCOMPANY PLANS DATED 6-23-14

CONDUIT

NEW	EXISTING	
		LIGHTING CONDUIT, UNLESS OTHERWISE INDICATED OR NOTED
		TRAFFIC SIGNAL CONDUIT
C	c	COMMUNICATION CONDUIT
T	t	TELEPHONE CONDUIT
F	f	FIRE ALARM CONDUIT
FO	fo	FIBER OPTIC CONDUIT
		CONDUIT TERMINATION
R	r	CONDUIT RISER ATTACHED TO THE STRUCTURE OR SERVICE POLE

SERVICE EQUIPMENT

NEW	EXISTING	
OH	oh	OVERHEAD LINES
U	U	WOOD POLE, "U" INDICATES UTILITY OWNED
		POLE GUY WITH ANCHOR
		UTILITY TRANSFORMER - GROUND MOUNTED
III	III	SERVICE EQUIPMENT ENCLOSURE TYPE. DOOR INDICATES FRONT OF ENCLOSURE
T	t	TELEPHONE DEMARCATION CABINET

POLE-MOUNTED SERVICE DESIGNATION

TYPE H SERVICE, 28'-10" — TYPE OF INSTALLATION AND POLE HEIGHT ABOVE GRADE

FLASHING BEACON

NEW	EXISTING	
R	R	FLASHING BEACON (ONE VEHICLE SIGNAL HEAD WITH BACKPLATE AND VISOR) "R" INDICATES RED INDICATION, "Y" INDICATES YELLOW INDICATION
Y Y	Y Y	FLASHING BEACON WITH TYPE 15-FBS STANDARD AND A SIGN.
R R	R R	FLASHING BEACON WITH TYPES 9, 9A OR 9B SIGN UNLESS OTHERWISE SPECIFIED OR INDICATED

SIGNAL EQUIPMENT

NEW	EXISTING	
C	C	PEDESTRIAN SIGNAL HEAD "C" INDICATES COUNTDOWN PEDESTRIAN HEAD
		PUSH BUTTON ASSEMBLY POST
		PEDESTRIAN BARRICADE
		VEHICLE SIGNAL HEAD (WITH BACKPLATE AND 3-SECTIONS: RED, YELLOW AND GREEN)
		VEHICLE SIGNAL HEAD WITH ANGLE VISOR
PV	PV	MODIFICATIONS OF BASIC SYMBOL: "L" INDICATES ALL NON-ARROW SECTIONS LOUVERED "LG" INDICATES LOUVERED GREEN SECTION ONLY "PV" INDICATES ALL 12" SECTIONS PROGRAMMED VISIBILITY "8" INDICATES ALL 8" SECTIONS (ONLY WHEN SPECIFIED)
		VEHICLE SIGNAL HEAD CONSISTING OF RED, YELLOW AND GREEN LEFT ARROW SECTIONS
		VEHICLE SIGNAL HEAD CONSISTING OF RED AND YELLOW SECTIONS WITH AN UP GREEN ARROW SECTION
		VEHICLE SIGNAL HEAD (5 SECTION) CONSISTING OF RED, YELLOW AND GREEN SECTIONS WITH YELLOW AND GREEN RIGHT ARROW SECTIONS
		TYPE 15TS STANDARD WITH VEHICLE SIGNAL HEAD AND LUMINAIRE
		TYPE 21TS STANDARD WITH VEHICLE SIGNAL HEAD AND LUMINAIRE
		STANDARD WITH LUMINAIRE AND SIGNAL MAST ARMS AND ATTACHED VEHICLE SIGNAL HEADS
		TYPE 1 STANDARD WITH ATTACHED VEHICLE SIGNAL HEADS
		STANDARD WITH A SIGNAL MAST ARM, ATTACHED VEHICLE SIGNAL HEADS AND INTERNALLY ILLUMINATED STREET NAME SIGN
		CONTROLLER ASSEMBLY. DOOR INDICATES FRONT OF CABINET

SIGNAL EQUIPMENT Cont

NEW	EXISTING	
		GUARD POST
		TYPE 1 STANDARD WITH RAMP METERING SIGN
		OPTICAL DETECTOR FOR THE EMERGENCY VEHICLE DETECTION SYSTEM

NOTES:

1. All signal sections shall be 12" unless shown otherwise.
2. Signal heads shall be provided with backplates unless shown otherwise.

ILLUMINATED OVERHEAD SIGN

NEW	EXISTING	
		SINGLE POST, SINGLE ILLUMINATED SIGN, BALANCED BUTTERFLY
		SINGLE POST, DOUBLE ILLUMINATED SIGN, BALANCED BUTTERFLY
		SINGLE POST, SINGLE ILLUMINATED SIGN, FULL CANTILEVER
		DOUBLE POST, SINGLE ILLUMINATED SIGN
		SINGLE ILLUMINATED SIGN MOUNTED ON STRUCTURE
		DOUBLE POST, SINGLE ILLUMINATED SIGN WITH ELECTROLIER

STATE OF CALIFORNIA
DEPARTMENT OF TRANSPORTATION

ELECTRICAL SYSTEMS (LEGEND AND ABBREVIATIONS)

NO SCALE

RSP ES-1B DATED JULY 19, 2013 SUPERSEDES STANDARD PLAN ES-1B DATED MAY 20, 2011 - PAGE 426 OF THE STANDARD PLANS BOOK DATED 2010.

REVISED STANDARD PLAN RSP ES-1B

2010 REVISED STANDARD PLAN RSP ES-1B

7-15-13

Dist	COUNTY	ROUTE	POST MILES TOTAL PROJECT	SHEET No.	TOTAL SHEETS
06	Ker	178	100.6/102.7	52	54

Theresa Gabriel
REGISTERED ELECTRICAL ENGINEER

July 19, 2013
PLANS APPROVAL DATE

REGISTERED PROFESSIONAL ENGINEER
Theresa Aziz Gabriel
No. E15129
Exp. 6-30-14
ELECTRICAL
STATE OF CALIFORNIA

THE STATE OF CALIFORNIA OR ITS OFFICERS OR AGENTS SHALL NOT BE RESPONSIBLE FOR THE ACCURACY OR COMPLETENESS OF SCANNED COPIES OF THIS PLAN SHEET.

TO ACCOMPANY PLANS DATED 6-23-14

2010 REVISED STANDARD PLAN RSP ES-1C

EQUIPMENT IDENTIFICATION

ILLUMINATED SIGN IDENTIFICATION NUMBER:

SIGN No. 12345

10 ISL SCI 1.0

- SIGN NUMBER - PLACE ON POST OR STRUCTURE
- TRANSFORMER RATING (kVA)
- LIGHTING CONTROL TYPE
- NUMBER AND TYPE OF FIXTURES

DO NOT PLACE ON STANDARD OR STRUCTURE

ELECTROLIER OR EQUIPMENT IDENTIFICATION NUMBER:

12345 - 15'-0"

- MAST ARM LENGTH, IF SHOWN. DO NOT PLACE ON STANDARD OR STRUCTURE
- EQUIPMENT NUMBER - PLACE ON STANDARD OR STRUCTURE. EXISTING EQUIPMENT NUMBERS ARE SHOWN IN PARENTHESIS

CONDUIT AND CONDUCTOR IDENTIFICATION:

1½"C, 2#10, 15#14, 2 DLC, 12P#18

- PAIR
- NUMBER AND SIZE OF CONDUCTORS AND CABLES
- SIZE OF CONDUIT IN INCHES

ø1, ø2, ø2P, etc.	TRAFFIC PHASE IDENTIFICATION FOR SIGNAL FACES, DETECTORS AND PHASE DIAGRAMS
1 2 3	LEGEND NUMBERS
A B C	EQUIPMENT, SIGNAL POLES, INSTALLATION OR ITEMS
1 2 3	CONDUIT RUN NUMBERS

SIGNAL AND LIGHTING STANDARD (TYPICAL DESIGNATION):

19A - 3 - 100

- WIND VELOCITY = 100 mph
- CASE 3 ARM LOADING
- STANDARD TYPE
- STANDARD PLAN SHEET NUMBER
- DETAIL, NUMBER, SECTION, TYPE OR ELEVATION

MISCELLANEOUS EQUIPMENT

NEW	EXISTING	
CMS	cms	CHANGEABLE MESSAGE SIGN
		CLOSED CIRCUIT TELEVISION CAMERA
		HIGHWAY ADVISORY RADIO POLE AND ANTENNA
EMS	ems	EXTINGUISHABLE MESSAGE SIGN
M V	m v	DETECTION DEVICE M = MICROWAVE SENSOR V = VIDEO IMAGE SENSOR

WIRING DIAGRAM LEGEND

- EXTERNAL CONDUCTOR
- CONDUCTOR OR BUS
- TIE POINT
- CONTACTOR COIL
- CONTACTOR, NO CONTACT
- TERMINAL BLOCKS
- CONTACTOR, NC CONTACT
- ENCLOSURE BOND
- GROUNDING ELECTRODE
- CIRCUIT BREAKER
- RECEPTACLE

PULL BOXES

NEW	EXISTING	
		PULL BOX, No. 5 UNLESS OTHERWISE INDICATED OR NOTED
3	9A(21)	PULL BOX, ADDITIONAL DESIGNATIONS OR DESCRIPTIONS

3 No. 3½ PULL BOX
5 No. 5 PULL BOX
6 No. 6 PULL BOX
7 No. 7 (CEILING PULL BOX)
8 No. 8 (PENDANT SOFFIT PULL BOX)
9 No. 9 PULL BOX
9A No. 9A PULL BOX

(C) COMMUNICATIONS PULL BOX
(E) PULL BOX WITH EXTENSION
(S) SPRINKLER CONTROL PULL BOX
(21) ANCHOR BOLTS AND CONDUIT FOR FUTURE INSTALLATION OF TYPE 21 STANDARD
(T) TRAFFIC PULL BOX

VEHICLE DETECTORS

5 J 9 U

- VEHICLE DETECTOR DESIGNATION
- U = UPPER
  L = LOWER
- SLOT NUMBER IN INPUT FILE
- INPUT FILE (I OR J)
- PHASE

NEW	EXISTING	
		TYPE A DETECTOR LOOP. OUTLINE OF SAWCUT SHOWN
		TYPE B DETECTOR LOOP. OUTLINE OF SAWCUT SHOWN
		TYPE C DETECTOR LOOP. OUTLINE OF SAWCUT SHOWN
		TYPE D DETECTOR LOOP. OUTLINE OF SAWCUT SHOWN
		TYPE E DETECTOR LOOP. OUTLINE OF SAWCUT SHOWN
		TYPE Q DETECTOR LOOP. OUTLINE OF SAWCUT SHOWN
		MAGNETIC DETECTOR
DH	dh	DETECTOR HANDHOLE
		MICROWAVE OR VIDEO DETECTION ZONE

STATE OF CALIFORNIA
DEPARTMENT OF TRANSPORTATION

ELECTRICAL SYSTEMS (LEGEND AND ABBREVIATIONS)

NO SCALE

RSP ES-1C DATED JULY 19, 2013 SUPERSEDES STANDARD PLAN ES-1C DATED MAY 20, 2011 - PAGE 427 OF THE STANDARD PLANS BOOK DATED 2010.

REVISED STANDARD PLAN RSP ES-1C

Dist	COUNTY	ROUTE	POST MILES TOTAL PROJECT	SHEET No.	TOTAL SHEETS
06	Ker	178	100.6/102.7	53	54

Theresa Gabriel
REGISTERED ELECTRICAL ENGINEER

July 19, 2013
PLANS APPROVAL DATE

REGISTERED PROFESSIONAL ENGINEER
Theresa Aziz Gabriel
No. E15129
Exp. 6-30-14
ELECTRICAL
STATE OF CALIFORNIA

THE STATE OF CALIFORNIA OR ITS OFFICERS OR AGENTS SHALL NOT BE RESPONSIBLE FOR THE ACCURACY OR COMPLETENESS OF SCANNED COPIES OF THIS PLAN SHEET.

TO ACCOMPANY PLANS DATED 6-23-14

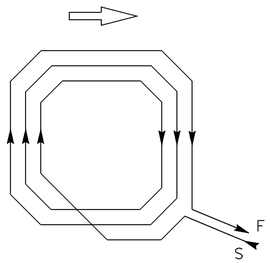

WINDING DETAIL

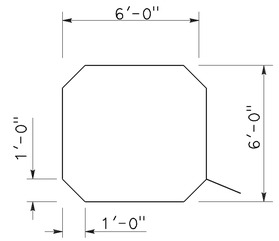

SAWCUT DETAIL

TYPE A LOOP DETECTOR CONFIGURATION

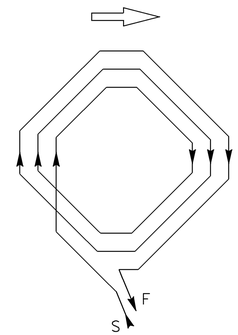

WINDING DETAIL

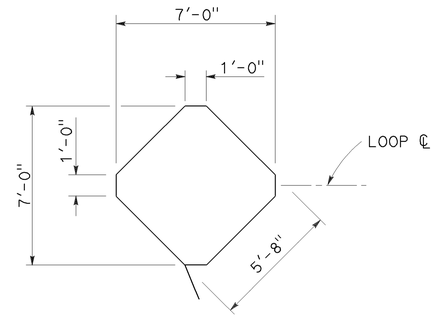

SAWCUT DETAIL

TYPE B LOOP DETECTOR CONFIGURATION

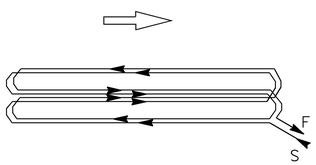

WINDING DETAIL

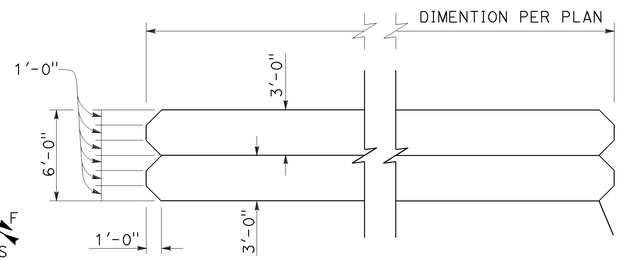

SAWCUT DETAIL

TYPE C LOOP DETECTOR CONFIGURATION

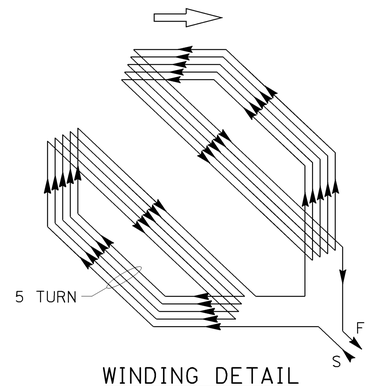

WINDING DETAIL

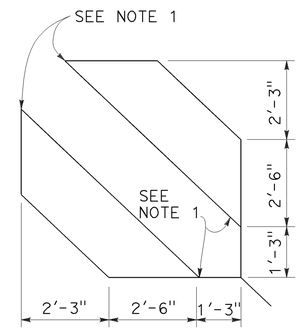

SAWCUT DETAIL

TYPE D LOOP DETECTOR CONFIGURATION

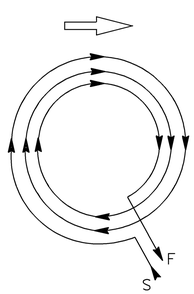

WINDING DETAIL

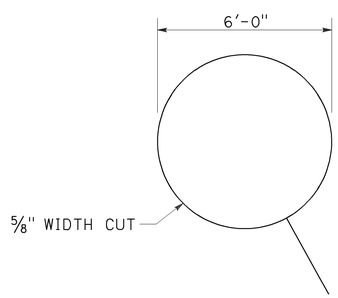

SAWCUT DETAIL

TYPE E LOOP DETECTOR CONFIGURATION

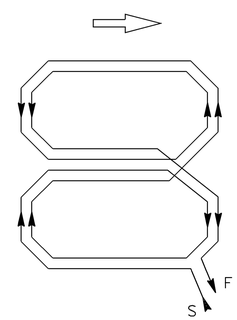

WINDING DETAIL

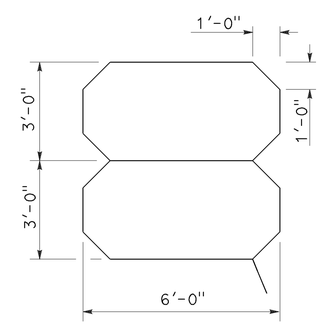

SAWCUT DETAIL

TYPE Q LOOP DETECTOR CONFIGURATION

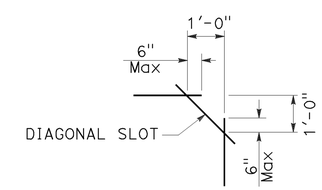

PLAN VIEW OF DIAGONAL SLOT AT CORNERS

NOTES:

1. Round corners of acute angle sawcuts to prevent damage to conductors.
2. Typical distance separating loops from edge to edge is 10' for Type A, B, D and E installation in single lane.

STATE OF CALIFORNIA
DEPARTMENT OF TRANSPORTATION

ELECTRICAL SYSTEMS (DETECTORS)

NO SCALE

RSP ES-5B DATED JULY 19, 2013 SUPERSEDES STANDARD PLAN ES-5B DATED MAY 20, 2011 - PAGE 449 OF THE STANDARD PLANS BOOK DATED 2010.

REVISED STANDARD PLAN RSP ES-5B

2010 REVISED STANDARD PLAN RSP ES-5B

7-9-13

Dist	COUNTY	ROUTE	POST MILES TOTAL PROJECT	SHEET No.	TOTAL SHEETS
06	Ker	178	100.6/102.7	54	54

Theresa Gabriel
REGISTERED ELECTRICAL ENGINEER

July 19, 2013
PLANS APPROVAL DATE

REGISTERED PROFESSIONAL ENGINEER
Theresa Aziz Gabriel
No. E15129
Exp. 6-30-14
ELECTRICAL
STATE OF CALIFORNIA

THE STATE OF CALIFORNIA OR ITS OFFICERS OR AGENTS SHALL NOT BE RESPONSIBLE FOR THE ACCURACY OR COMPLETENESS OF SCANNED COPIES OF THIS PLAN SHEET.

TO ACCOMPANY PLANS DATED 6-23-14

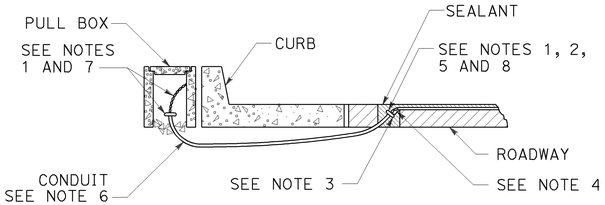

TYPE A
CURB TERMINATION DETAIL

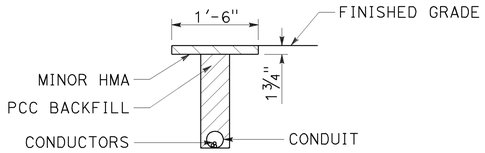

"T" TRENCH
DETAIL T

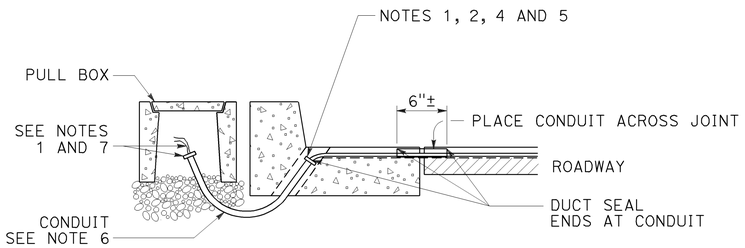

CROSS SECTION

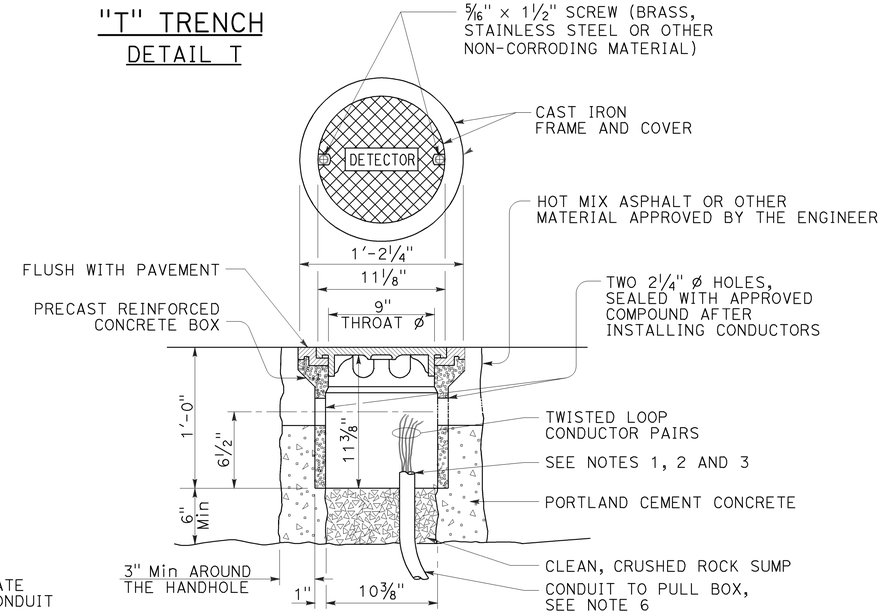

DETECTOR HANDHOLE DETAIL

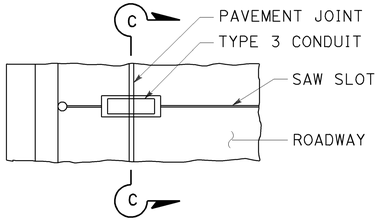

PLAN VIEW

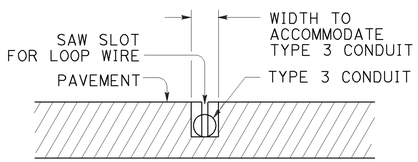

SECTION C-C

TYPE B
CURB TERMINATION DETAIL

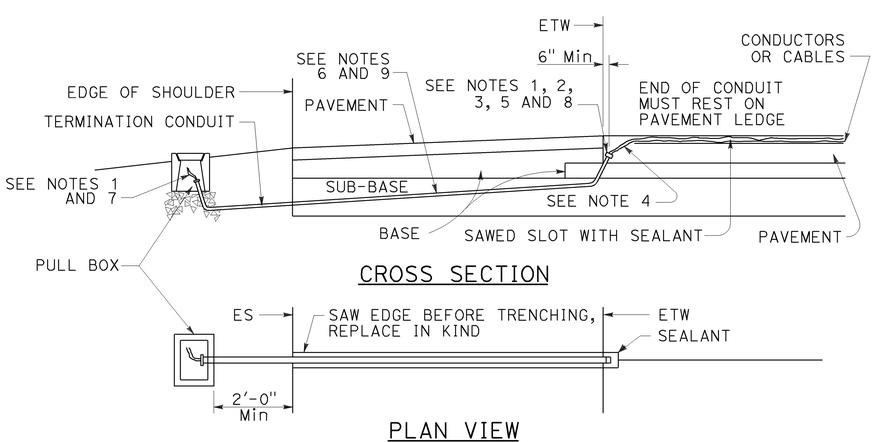

CROSS SECTION

PLAN VIEW

SHOULDER TERMINATION DETAILS

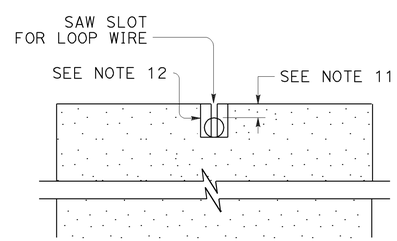

SECTION A-A

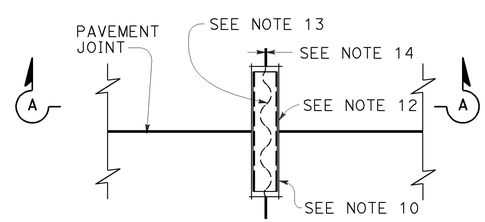

PLAN VIEW

TYPICAL LOOP LEAD-IN DETAIL
AT PAVEMENT JOINT

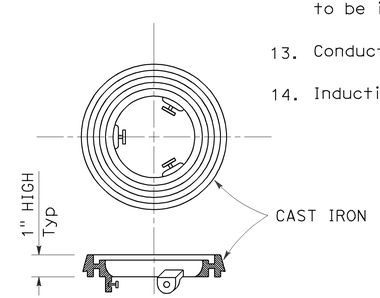

LOCKING GRADE RING

NOTES:

1. Bushing shall be used at end of conduit.
2. Tape detector conductors or cables 3" each side of bushings.
3. Install duct seal compound to each end of termination conduit before installing sealant.
4. Round all sharp edges where detector conductors or cables have to pass.
5. End of conduit shall be 3⅛" below roadway surface.
6.

Conduit size	Loop conductors
1"C minimum	1 to 2 pairs
1½"C minimum	3 to 4 pairs
2"C minimum	5 or more pairs

7. Splice detector conductors or cables to detector lead-in-cable.
8. Location of detector handhole when shown on plans.
9. When the shoulder and traveled way are paved with the same material and there is no joint between them, the conduit shall extend only 2'-0" into the shoulder pavement.
10. ¾"C, Type 3 conduit 6" long minimum, plug both ends with duct compound to keep out sealant.
11. ½" Minimum between top of conduit and pavement surface.
12. Sawcut shall not exceed 1" in width and ⅛" longer than conduit to be installed.
13. Conductors with ½" minimum slack inside conduit.
14. Inductive loop detector saw slot.

STATE OF CALIFORNIA
DEPARTMENT OF TRANSPORTATION

ELECTRICAL SYSTEMS (CURB TERMINATION AND HANDHOLE)

NO SCALE

RSP ES-5D DATED JULY 19, 2013 SUPERSEDES STANDARD PLAN ES-5D
DATED MAY 20, 2011 - PAGE 451 OF THE STANDARD PLANS BOOK DATED 2010.

REVISED STANDARD PLAN RSP ES-5D

2010 REVISED STANDARD PLAN RSP ES-5D

7-9-13