Dist	COUNTY	ROUTE	POST MILES TOTAL PROJECT	SHEET No.	TOTAL SHEETS
04	Ala	80,580	2.8, R41.2/47.0	13	315

REGISTERED CIVIL ENGINEER 5/13/14 DATE

6-23-14
PLANS APPROVAL DATE

REGISTERED PROFESSIONAL ENGINEER Yalin Wang No. 57007 Exp. 6-30-15 CIVIL STATE OF CALIFORNIA

THE STATE OF CALIFORNIA OR ITS OFFICERS OR AGENTS SHALL NOT BE RESPONSIBLE FOR THE ACCURACY OR COMPLETENESS OF SCANNED COPIES OF THIS PLAN SHEET.

NOTE:
FOR ACCURATE RIGHT OF WAY DATA, CONTACT RIGHT OF WAY ENGINEERING AT THE DISTRICT OFFICE.

1 **REPLACED PER ADDENDUM No. 1 DATED JANUARY 5, 2015**

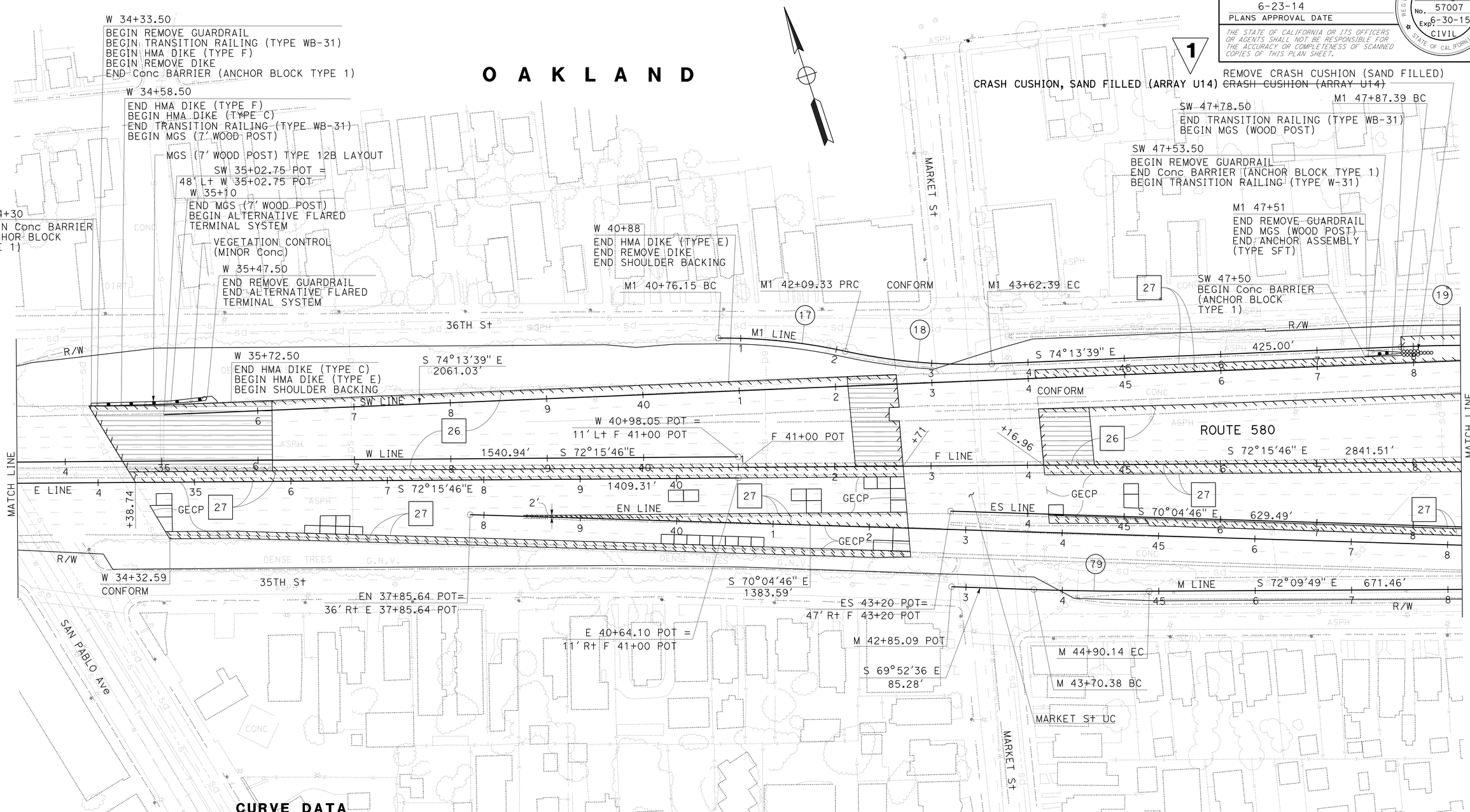

CURVE DATA

No. (19)	R	Δ	T	L	N-COORDINATE	E-COORDINATE
17	600'	12° 39' 39"	66.56'	132.58'	487284.048	1487243.142
18	600'	14° 36' 57"	76.94'	153.05'	488319.189	1487850.170
19	1800'	03° 26' 10"	53.99'	107.94'	485894.030	1487606.802
79	3000'	02° 17' 14"	59.88'	119.76'	490322.611	1488687.684

FOR NOTES, ABBREVIATIONS AND LEGEND, SEE SHEET L-1

LAYOUT
LOCATION No. 1
SCALE: 1" = 50'

L-5

GC	5/12/14
REVISED BY	DATE REVISED
GENER CAPULONG	YALIN WANG
CALCULATED-DESIGNED BY	CHECKED BY
FUNCTIONAL SUPERVISOR	KENDALL KITAMURA

STATE OF CALIFORNIA - DEPARTMENT OF TRANSPORTATION
Caltrans DESIGN

LAST REVISION 06-21-14
DATE PLOTTED => 29-DEC-2014
TIME PLOTTED => 12:26

NOTE:

FOR ACCURATE RIGHT OF WAY DATA, CONTACT RIGHT OF WAY ENGINEERING AT THE DISTRICT OFFICE.

1 REPLACED PER ADDENDUM No. 1 DATED JANUARY 5, 2015

Dist	COUNTY	ROUTE	POST MILES TOTAL PROJECT	SHEET No.	TOTAL SHEETS
04	Ala	80,580	2.8, R41.2/47.0	14	315

REGISTERED CIVIL ENGINEER 5/13/14 DATE

6-23-14
PLANS APPROVAL DATE

REGISTERED PROFESSIONAL ENGINEER Yalin Wang No. 57007 Exp. 6-30-15 CIVIL STATE OF CALIFORNIA

THE STATE OF CALIFORNIA OR ITS OFFICERS OR AGENTS SHALL NOT BE RESPONSIBLE FOR THE ACCURACY OR COMPLETENESS OF SCANNED COPIES OF THIS PLAN SHEET.

CURVE DATA

No. ⓡ	R	Δ	T	L	N-COORDINATE	E-COORDINATE
19	1800′	03° 26′ 10"	53.99′	107.94′	485894.030	1487606.802
20	600′	91° 48′ 26"	619.23′	961.40′	487976.400	1489001.240
21	5200′	03° 46′ 21"	171.25′	342.38′	482340.894	1487382.002
22	600′	32° 12′ 39"	173.24′	337.31′	486684.533	1488896.202
23	860′	52° 30′ 56"	424.25′	788.25′	486521.490	1488693.673
24	700′	52° 10′ 38"	342.75′	637.46′	487464.000	1490286.079
75	600′	81° 20′ 03"	515.48′	851.73′	486575.180	1488687.906
76	4800′	04° 01′ 11"	168.44′	336.75′	491803.123	1490060.424
77	600′	41° 46′ 59"	229.01′	437.55′	487689.452	1489170.816
78	900′	49° 49′ 48"	418.05′	782.72′	487959.360	1489039.860
80	4800′	02° 55′ 10"	122.31′	244.58′	491830.421	1489878.226
81	700′	08° 49′ 37"	54.02′	107.84′	487918.524	1488604.542
82	700′	07° 13′ 23"	44.18′	88.24′	486535.796	1488385.309
83	2000′	06° 52′ 32"	120.14′	240.00′	485107.322	1488641.193
91	600′	78° 46′ 06"	492.56′	824.86′	486366.998	1489934.003
91A	3000′	02°56′28.95"	77.02′	154.01′	489928.583	1490545.590

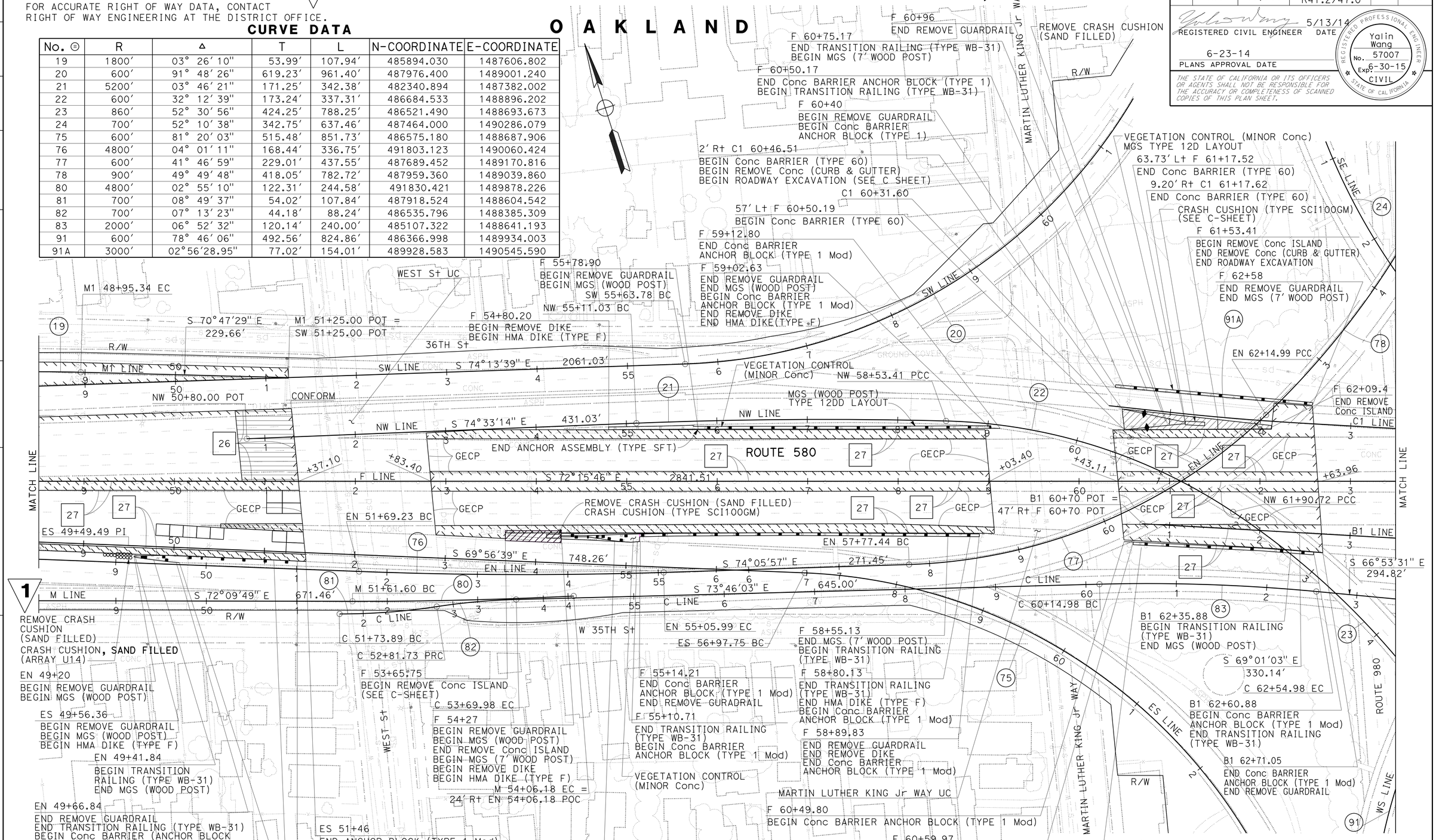

FOR NOTES, ABBREVIATIONS AND LEGEND, SEE SHEET L-1

LAYOUT LOCATION No. 1

SCALE: 1" = 50′

L-6

GC	5/12/14
REVISED BY	DATE REVISED
GENER CAPULONG	YALIN WANG
CALCULATED-DESIGNED BY	CHECKED BY
FUNCTIONAL SUPERVISOR	KENDALL KITAMURA

STATE OF CALIFORNIA - DEPARTMENT OF TRANSPORTATION

Caltrans DESIGN

LAST REVISION 06-21-14 | DATE PLOTTED => 29-DEC-2014 | TIME PLOTTED => 12:26

Dist	COUNTY	ROUTE	POST MILES TOTAL PROJECT	SHEET No.	TOTAL SHEETS
04	Ala	80,580	2.8, R41.2/47.0	15	315

REGISTERED CIVIL ENGINEER 5/13/14 DATE

6-23-14
PLANS APPROVAL DATE

REGISTERED PROFESSIONAL ENGINEER Yalin Wang No. 57007 Exp 6-30-15 CIVIL STATE OF CALIFORNIA

THE STATE OF CALIFORNIA OR ITS OFFICERS OR AGENTS SHALL NOT BE RESPONSIBLE FOR THE ACCURACY OR COMPLETENESS OF SCANNED COPIES OF THIS PLAN SHEET.

NOTE:

FOR ACCURATE RIGHT OF WAY DATA, CONTACT RIGHT OF WAY ENGINEERING AT THE DISTRICT OFFICE.

CURVE DATA

No. ⊛	R	Δ	T	L	N-COORDINATE	E-COORDINATE
5	16000′	02° 13′ 10"	309.93′	619.79′	502095.419	1494984.596
15	23000′	02° 16′ 07"	455.39′	910.67′	480471.205	1511695.678
16	21000′	00° 27′ 26"	83.79′	167.58′	481006.983	1509768.776
23	860′	52° 30′ 56"	424.25′	788.25′	486521.490	1488693.673
24	700′	52° 10′ 38"	342.75′	637.46′	487464.000	1490286.079
25	860′	22° 43′ 41"	172.84′	341.14′	487567.391	1490408.187
26	1600′	13° 33′ 34"	190.21′	378.652′	488226.629	1490744.350
27	600′	85° 34′ 07"	555.30′	896.07′	487445.591	1490526.294
78	900′	49° 49′ 48"	418.05′	782.72′	487959.360	1489039.860
84	1300′	07° 36′ 26"	86.43′	172.60′	488026.838	1490207.510
85	1636′	03° 25′ 10"	48.83′	97.64′	488226.639	1490744.331
86	860′	03° 59′ 17"	29.94′	59.86′	486155.547	1489266.065
87	500′	14° 53′ 09"	65.32′	129.90′	486481.894	1489418.044
88	500′	28° 18′ 30"	126.09′	247.03′	487163.969	1490161.419
89	6000′	01° 54′ 33"	99.97′	199.93′	480666.094	1489493.745
92	600′	78° 46′ 06"	492.56′	824.86′	486366.998	1489934.003
93	1200′	15° 16′ 08"	160.84′	319.79′	485767.409	1489911.783
95	600′	88° 02′ 24"	579.81′	921.95′	486121.956	1490167.198

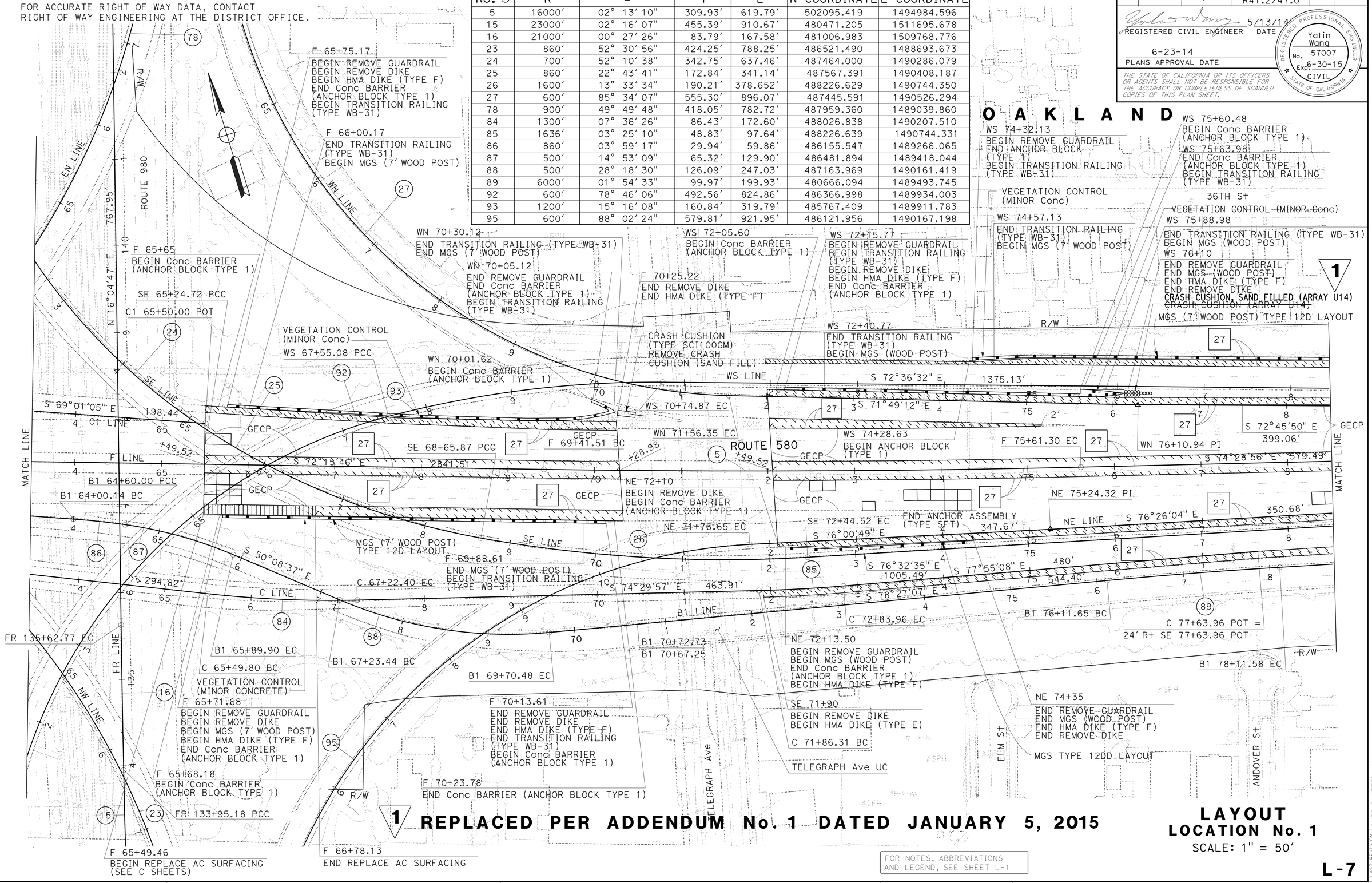

1 REPLACED PER ADDENDUM No. 1 DATED JANUARY 5, 2015

FOR NOTES, ABBREVIATIONS AND LEGEND, SEE SHEET L-1

LAYOUT LOCATION No. 1

SCALE: 1" = 50′

L-7

GENER CAPULONG	GC	REVISED BY	5/12/14
YALIN WANG		DATE REVISED	
CALCULATED-DESIGNED BY		FUNCTIONAL SUPERVISOR	
CHECKED BY		KENDALL KITAMURA	

STATE OF CALIFORNIA - DEPARTMENT OF TRANSPORTATION

Caltrans DESIGN

LAST REVISION 06-21-14 | DATE PLOTTED => 29-DEC-2014 | TIME PLOTTED => 12:26

Dist	COUNTY	ROUTE	POST MILES TOTAL PROJECT	SHEET No.	TOTAL SHEETS
04	Ala	80,580	2.8, R41.2/47.0	26	315

REGISTERED CIVIL ENGINEER 5/13/14 DATE

6-23-14
PLANS APPROVAL DATE

REGISTERED PROFESSIONAL ENGINEER Yalin Wang No. 57007 Exp. 6-30-15 CIVIL STATE OF CALIFORNIA

THE STATE OF CALIFORNIA OR ITS OFFICERS OR AGENTS SHALL NOT BE RESPONSIBLE FOR THE ACCURACY OR COMPLETENESS OF SCANNED COPIES OF THIS PLAN SHEET.

NOTE:
FOR ACCURATE RIGHT OF WAY DATA, CONTACT RIGHT OF WAY ENGINEERING AT THE DISTRICT OFFICE.

1 **REPLACED PER ADDENDUM No. 1 DATED JANUARY 5, 2015**

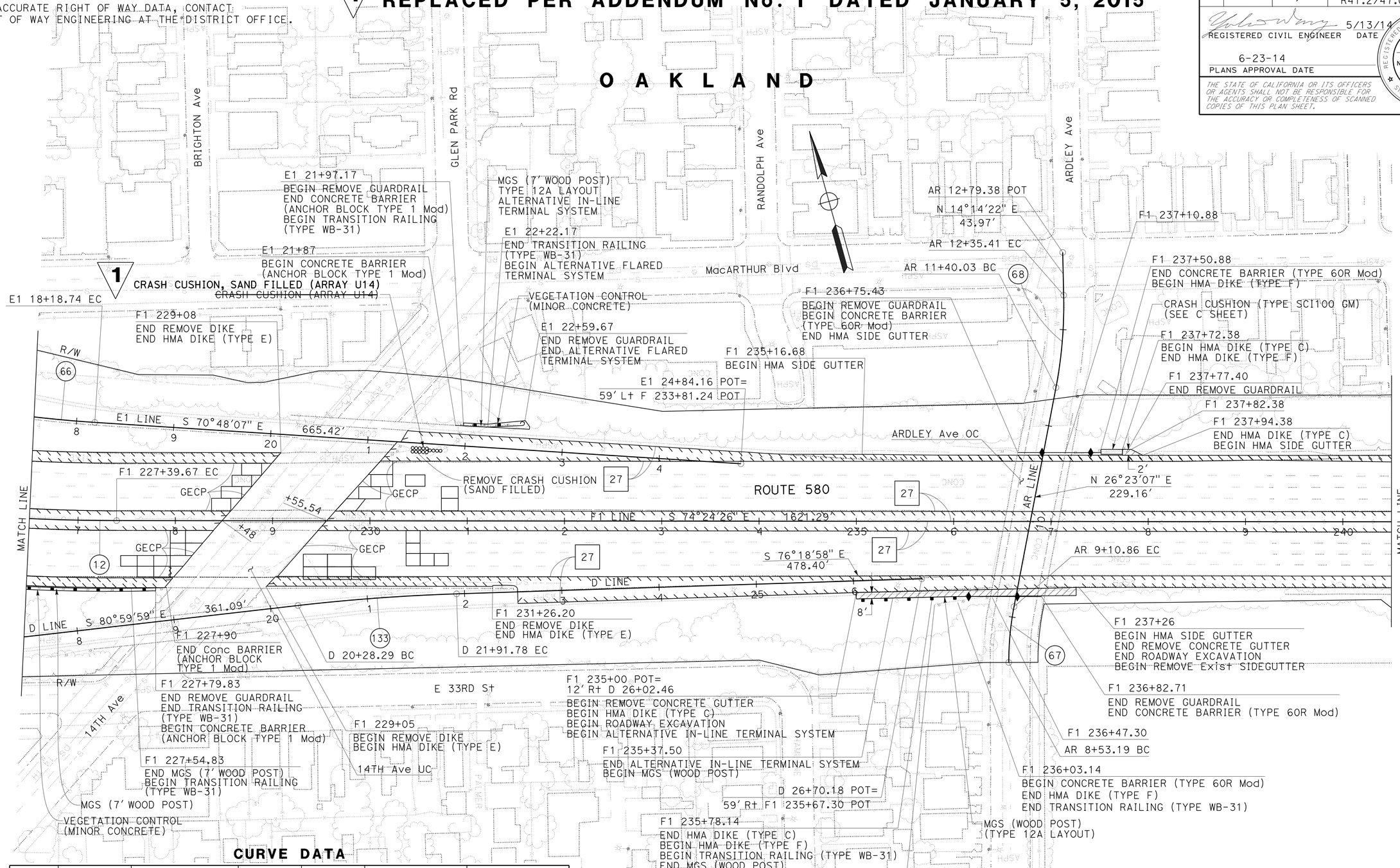

CURVE DATA

No. (B)	R	Δ	T	L	N-COORDINATE	E-COORDINATE
12	2000'	30° 27' 42"	544.54'	1063.31'	480094.504	1501790.303
66	1200'	14° 48' 07"	155.87'	310.01'	479404.573	1501652.707
67	300'	11° 00' 52"	28.92'	57.67'	477702.500	1502386.429
68	450'	12° 08' 42"	47.86'	95.38'	478241.081	1501816.428
133	2000'	04° 41' 01"	81.79'	163.49'	476058.761	1501096.050

FOR NOTES, ABBREVIATIONS AND LEGEND, SEE SHEET L-1

LAYOUT
LOCATION No. 1
SCALE: 1" = 50'

L-18

GC	5/12/14
REVISED BY	DATE REVISED
GENER CAPULONG	YALIN WANG
CALCULATED-DESIGNED BY	CHECKED BY
FUNCTIONAL SUPERVISOR	KENDALL KITAMURA

STATE OF CALIFORNIA - DEPARTMENT OF TRANSPORTATION
Caltrans
DESIGN

LAST REVISION 06-21-14 | DATE PLOTTED => 29-DEC-2014 | TIME PLOTTED => 12:26

Dist	COUNTY	ROUTE	POST MILES TOTAL PROJECT	SHEET No.	TOTAL SHEETS
04	Ala	80,580	2.1/3.0, R41.2/47.0	44	315

REGISTERED CIVIL ENGINEER 5/13/14 DATE

6-23-14
PLANS APPROVAL DATE

REGISTERED PROFESSIONAL ENGINEER Yalin Wang No. 57007 Exp. 6-30-15 CIVIL STATE OF CALIFORNIA

THE STATE OF CALIFORNIA OR ITS OFFICERS OR AGENTS SHALL NOT BE RESPONSIBLE FOR THE ACCURACY OR COMPLETENESS OF SCANNED COPIES OF THIS PLAN SHEET.

NOTE:

FOR ACCURATE RIGHT OF WAY DATA, CONTACT RIGHT OF WAY ENGINEERING AT THE DISTRICT OFFICE.

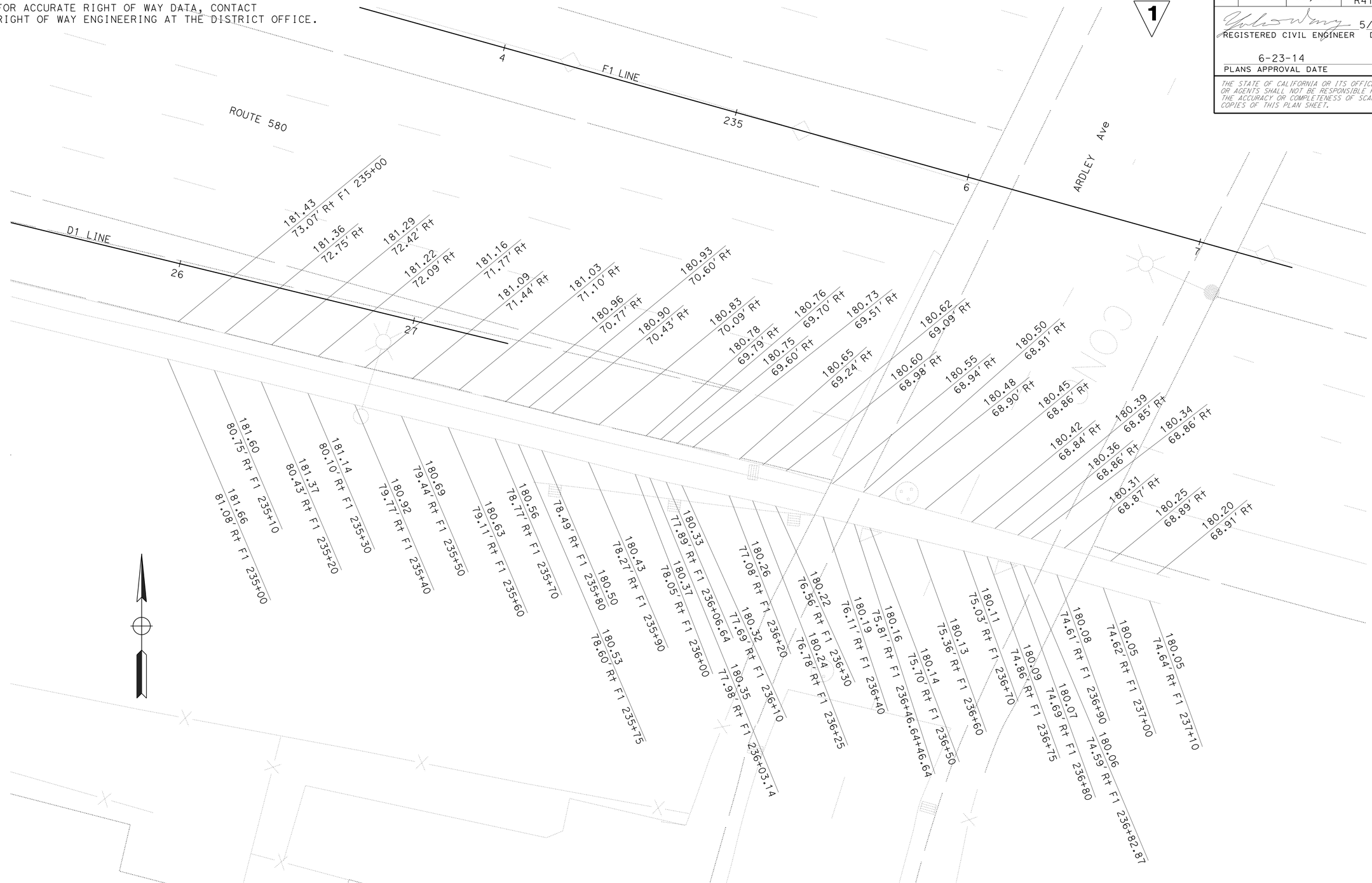

1 **REPLACED PER ADDENDUM No. 1 DATED JANUARY 5, 2015**

APPROVED FOR PAVEMENT ELEVATION WORK ONLY

FOR NOTES, ABBREVIATIONS AND LEGEND, SEE SHEET C-1

CONSTRUCTION DETAILS
PAVEMENT ELEVATION PLAN
NO SCALE

C-15

STATE OF CALIFORNIA - DEPARTMENT OF TRANSPORTATION
Caltrans® **DESIGN**

FUNCTIONAL SUPERVISOR: KENDALL KITAMURA
CALCULATED-DESIGNED BY: GENER CAPULONE
CHECKED BY: YALIN WANG
REVISED BY: YW
DATE REVISED: 5/12/14

LAST REVISION 06-04-14
DATE PLOTTED => 29-DEC-2014
TIME PLOTTED => 12:26

Dist	COUNTY	ROUTE	POST MILES TOTAL PROJECT	SHEET No.	TOTAL SHEETS
04	Ala	80,580	2.8, R41.2/47.0	97	315

Eric Kawakita 5/13/14
REGISTERED CIVIL ENGINEER DATE

6-23-14
PLANS APPROVAL DATE

REGISTERED PROFESSIONAL ENGINEER Eric S. Kawakita No. 78480 Exp. 9-30-15 CIVIL STATE OF CALIFORNIA

THE STATE OF CALIFORNIA OR ITS OFFICERS OR AGENTS SHALL NOT BE RESPONSIBLE FOR THE ACCURACY OR COMPLETENESS OF SCANNED COPIES OF THIS PLAN SHEET.

1

LEGEND:

POLYESTER GROUT

MINOR CONCRETE

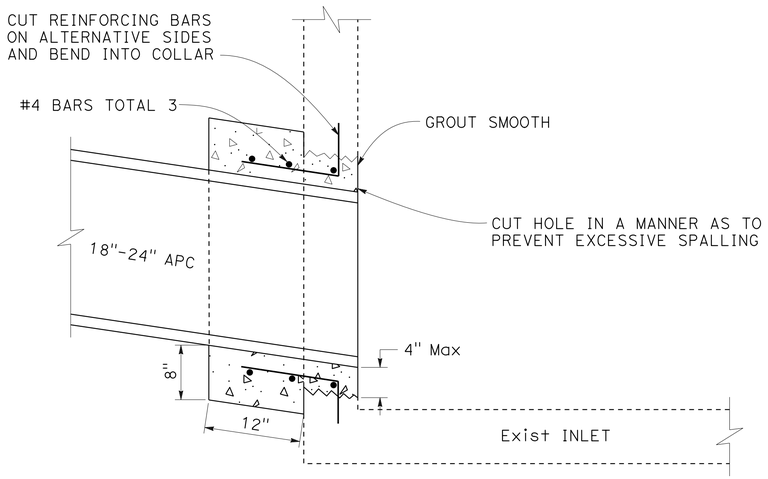

PIPE CONNECTION TO EXISTING INLET

2 f 3 b 10 b 11 b 13a b 15 b
16 b 21 b 22 b 25 b

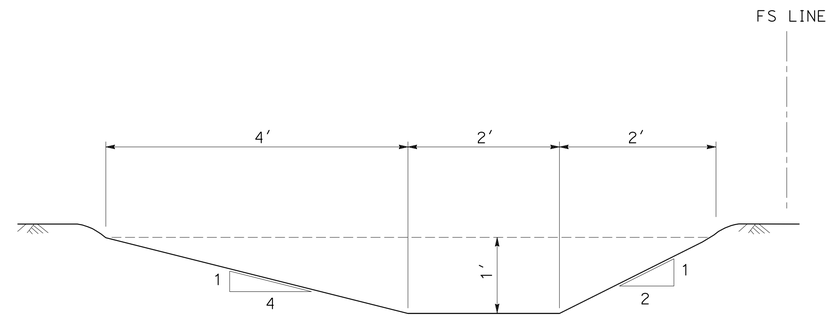

TYPICAL CROSS SECTION

UNLINED TRAPEZOIDAL DITCH

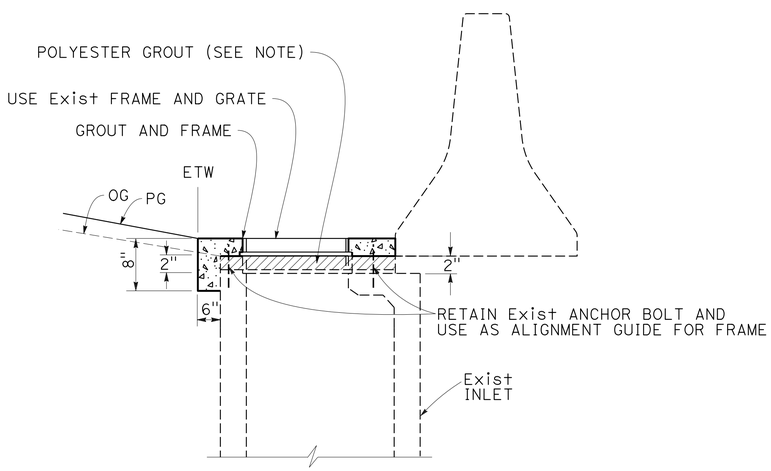

ADJUST INLET (JUNCTION BOX)

7a a 7b a 7c a

NOTE:
POLYESTER GROUT MUST COMPLY WITH SECTION 41-4.02C OF STANDARD SPECIFICATION

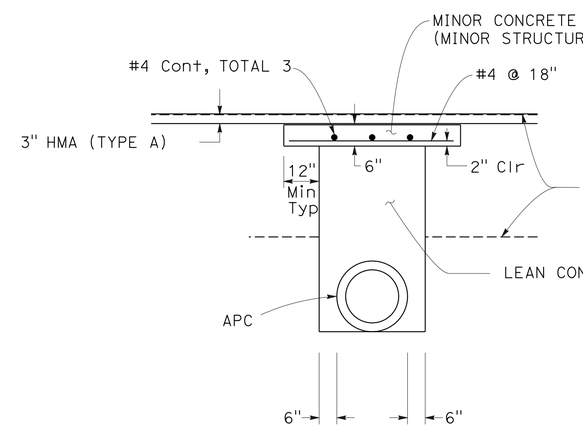

TRENCH DETAIL

2 b d f 22 b

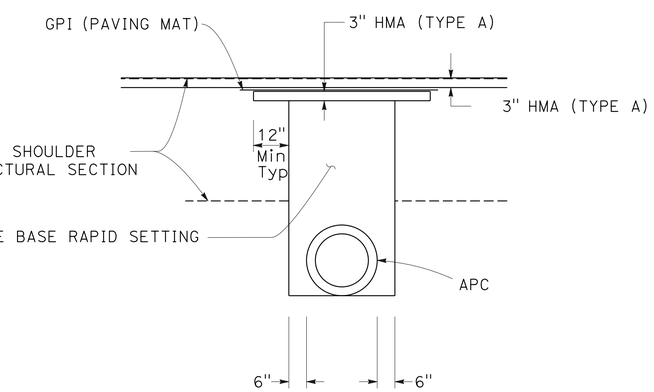

TRENCH DETAIL

3 b 10 b 11 b 13a b 15 b
16 b 20 d 21 b 22 b 25 b
26 b d

1 **REPLACED PER ADDENDUM No. 1 DATED JANUARY 5, 2015**

DRAINAGE DETAILS
NO SCALE

DD-2

STATE OF CALIFORNIA - DEPARTMENT OF TRANSPORTATION	Caltrans	HYDRAULICS	
FUNCTIONAL SUPERVISOR	KAMRAN NAKHJIRI	CALCULATED-DESIGNED BY	ERIC KAWAKITA
CHECKED BY	YALIN WANG	REVISED BY	EK
DATE REVISED	5/13/14	LAST REVISION	05-13-14
DATE PLOTTED => 29-DEC-2014	TIME PLOTTED => 12:26		

Dist	COUNTY	ROUTE	POST MILES TOTAL PROJECT	SHEET No.	TOTAL SHEETS
04	Ala	80,580	2.8, R41.2/47.0	202	315

Jeri-Paul Fabian 6/11/14
REGISTERED CIVIL ENGINEER DATE

6-23-14
PLANS APPROVAL DATE

REGISTERED PROFESSIONAL ENGINEER Jeri-Paul F. Fabian No. 81174 Exp. 9-30-15 CIVIL STATE OF CALIFORNIA

THE STATE OF CALIFORNIA OR ITS OFFICERS OR AGENTS SHALL NOT BE RESPONSIBLE FOR THE ACCURACY OR COMPLETENESS OF SCANNED COPIES OF THIS PLAN SHEET.

OVERHEAD SIGN PANEL DETAILS AND QUANTITIES

SHEET No.	SIGN LETTER	SIGN CODE	SIGN PANEL SIZE	FWBT	FEBT	REMOVE SIGN FROM SIGN FRAME (N)	REMOVE SIGN PANEL & REMOVABLE SIGN PANEL FRAME (N)	1 FURNISH FORMED SIGN PANEL (OVERHEAD)	FURNISH RSPF w/ SIGN PANELS ATTACHED	1 FURNISH LAMINATED SIGN PANEL (1"-TYPE A)	INSTALL SIGN PANEL ON EXISTING FRAME	INSTALL REMOVABLE SIGN PANEL FRAME	SIGN FACING MATERIAL				PREMIUM PROTECTIVE OVERLAY	REMARKS
													BACKGROUND		LEGEND			
													SHEETING COLOR	RETROREFLECTIVE ASTM TYPE	SHEETING COLOR	RETROREFLECTIVE ASTM TYPE		
			IN x IN			EA	EA	SQFT	LB	SQFT	SQFT	LB						
S-1	A	G24	360 x 100		X	1												
		G85	432 x 100		X	1												
		G24(CA)	360 x 100		X			250			250		GREEN	XI	WHITE	XI	X	
		G85(CA)	432 x 100		X			293.75			293.75		GREEN	XI	WHITE	XI	X	
S-2	B	G20	216 x 110		X	1												
		G20-5(CA)	216 x 110		X			165			165		GREEN	XI	WHITE	XI	X	
S-3	C	G24	360 x 110	X		1												
		G24	384 x 110	X		1												
		G24(CA)	360 x 110	X				275			275		GREEN	XI	WHITE	XI	X	
		G24(CA)	384 x 110	X				293.33			293.33		GREEN	XI	WHITE	XI	X	
	D	SPECIAL	264 x 90		X		1											
		SPECIAL	264 x 110		X				555			555	WHITE	XI	BLACK	PLAIN	X	
	E	G24	336 x 100		X		1											
		G24	210 x 100		X		1											
		G24	288 x 100		X	1												
		G24(CA)	288 x 100		X				537			537	GREEN	XI	WHITE	XI	X	
		G24(CA)	264 x 100		X				522			522	GREEN	XI	WHITE	XI	X	
		G24(CA)	288 x 100		X			200			200		GREEN	XI	WHITE	XI	X	
S-4	F	G24	288 x 70	X		1												
		G85	264 x 70	X		1												
		G24(CA)	288 x 70	X				140			140		GREEN	XI	WHITE	XI	X	
		G85(CA)	264 x 70	X				128.33			128.33		GREEN	XI	WHITE	XI	X	
	G	G83	312 x 100		X	1												
		G24	240 x 100		X	1												
		G83-5(CA)	312 x 100		X			216.67			216.67		GREEN	XI	WHITE	XI	X	
		G85-11(CA)	240 x 100		X			166.67			166.67		GREEN	XI	WHITE	XI	X	
S-5	H	G85	286 x 70	X		1												
		G85-11(CA)	286 x 70	X				139.03			139.03		GREEN	XI	WHITE	XI	X	
	I	G83	240 x 100	X		1												
		G24	288 x 100	X		1												
		G83-5(CA)	240 x 100	X				166.67			166.67		GREEN	XI	WHITE	XI	X	
		G85-11(CA)	288 x 100	X				200			200		GREEN	XI	WHITE	XI	X	
	J	G83	216 x 100		X	1												
		G85	336 x 100		X	1												
		G83-5(CA)	216 x 100		X			150			150		GREEN	XI	WHITE	XI	X	
		G85-11(CA)	336 x 100		X			233.33			233.33		GREEN	XI	WHITE	XI	X	
SHEET TOTAL								3017.78	1614		3017.78	1614						

(N) - NOT A SEPARATE PAY ITEM, FOR INFORMATION ONLY

SIGN QUANTITIES

1 **REPLACED PER ADDENDUM No. 1 DATED JANUARY 5, 2015**

SQ-1

STATE OF CALIFORNIA - DEPARTMENT OF TRANSPORTATION
Caltrans® TRAFFIC

JERI-PAUL F. FABIAN | CLAUDIA FANG | LOURDES DAVID | JF | 6/11/14
REVISED BY | DATE REVISED | FUNCTIONAL SUPERVISOR | CALCULATED-DESIGNED BY | CHECKED BY

LAST REVISION 06-11-14 | DATE PLOTTED => 29-DEC-2014 | TIME PLOTTED => 12:26

Dist	COUNTY	ROUTE	POST MILES TOTAL PROJECT	SHEET No.	TOTAL SHEETS
04	Ala	80,580	2.8, R41.2/47.0	203	315

Jeri-Paul Fabian 6/11/14
REGISTERED CIVIL ENGINEER DATE

6-23-14
PLANS APPROVAL DATE

REGISTERED PROFESSIONAL ENGINEER Jeri-Paul F. Fabian No. 81174 Exp. 9-30-15 CIVIL STATE OF CALIFORNIA

THE STATE OF CALIFORNIA OR ITS OFFICERS OR AGENTS SHALL NOT BE RESPONSIBLE FOR THE ACCURACY OR COMPLETENESS OF SCANNED COPIES OF THIS PLAN SHEET.

OVERHEAD SIGN PANEL DETAILS AND QUANTITIES

SHEET No.	SIGN LETTER	SIGN CODE	SIGN PANEL SIZE (IN x IN)	FWBT	FEBT	REMOVE SIGN FROM SIGN FRAME (N) (EA)	REMOVE SIGN PANEL & REMOVABLE SIGN PANEL FRAME (N) (EA)	1 FURNISH FORMED SIGN PANEL (OVERHEAD) (SQFT)	FURNISH RSPF w/ SIGN PANELS ATTACHED (LB)	1 FURNISH LAMINATED SIGN PANEL (1"-TYPE A) (SQFT)	INSTALL SIGN PANEL ON EXISTING FRAME (SQFT)	INSTALL REMOVABLE SIGN PANEL FRAME (LB)	SIGN FACING MATERIAL: BACKGROUND SHEETING COLOR	BACKGROUND RETROREFLECTIVE ASTM TYPE	LEGEND SHEETING COLOR	LEGEND RETROREFLECTIVE ASTM TYPE	PREMIUM PROTECTIVE OVERLAY	REMARKS
S-6	K	G24	336 x 100	X		1												
		G24	288 x 100	X		1												
		G24	360 x 100	X		1												
		G24(CA)	336 x 100	X				233.33			233.33		GREEN	XI	WHITE	XI	X	
		G24(CA)	288 x 100	X				200			200		GREEN	XI	WHITE	XI	X	
		G24(CA)	360 x 100	X				250			250		GREEN	XI	WHITE	XI	X	
S-7	L	G20	288 x 110	X		1												
		G20(CA)	288 x 110	X				220			220		GREEN	XI	WHITE	XI	X	
	M	G85	240 x 70		X	1												
		G85-11(CA)	240 x 70		X			116.67			116.67		GREEN	XI	WHITE	XI	X	
	N	SPECIAL	264 x 90		X	1												
		SPECIAL	264 x 90		X			165			165		WHITE	XI	BLACK	PLAIN	X	
S-8	O	G23	336 x 90	X		1												
		G23(CA)	336 x 90	X				210			210		GREEN	XI	WHITE	XI	X	
	P	G23	264 x 90		X		1											
		G23(CA)	336 x 90		X				583			583	GREEN	XI	WHITE	XI	X	
S-9	Q	G24	336 x 80	X		1												BM
		G24	288 x 80	X		1												
		G85	312 x 80	X		1												
		G24(CA)	336 x 80	X				186.67			186.67		GREEN	XI	WHITE	XI	X	
		G24(CA)	288 x 80	X				160			160		GREEN	XI	WHITE	XI	X	
		G85-11(CA)	312 x 80	X				173.33			173.33		GREEN	XI	WHITE	XI	X	
	R	G24	240 x 100	X		1												
		G24(CA)	240 x 100	X				166.67			166.67		GREEN	XI	WHITE	XI	X	
S-10	S	G23	336 x 90	X		1												
		G23(CA)	336 x 90	X				210			210		GREEN	XI	WHITE	XI	X	
	T	G83	240 x 100	X		1												BM
		G85	216 x 100	X		1												
		G83-5(CA)	240 x 100	X				166.67			166.67		GREEN	XI	WHITE	XI	X	
		G85-11(CA)	216 x 100	X				150			150		GREEN	XI	WHITE	XI	X	
	U	G24	312 x 70		X	1												BM
		G83	192 x 70		X	1												
		G85	216 x 70		X	1												
		G24(CA)	312 x 70		X			151.67			151.67		GREEN	XI	WHITE	XI	X	
		G83-5(CA)	192 x 70		X			93.33			93.33		GREEN	XI	WHITE	XI	X	
		G85-11(CA)	216 x 70		X			105			105		GREEN	XI	WHITE	XI	X	
SHEET TOTAL								2958.34	583		2958.34	583						

(N) - NOT A SEPARATE PAY ITEM, FOR INFORMATION ONLY

SIGN QUANTITIES

1 **REPLACED PER ADDENDUM No. 1 DATED JANUARY 5, 2015**

SQ-2

STATE OF CALIFORNIA - DEPARTMENT OF TRANSPORTATION
Caltrans TRAFFIC

FUNCTIONAL SUPERVISOR: LOURDES DAVID
CALCULATED-DESIGNED BY: JERI-PAUL F. FABIAN
CHECKED BY: CLAUDIA FANG
REVISED BY: JF
DATE REVISED: 6/11/14

LAST REVISION 06-11-14 | DATE PLOTTED => 29-DEC-2014 | TIME PLOTTED => 12:26

Dist	COUNTY	ROUTE	POST MILES TOTAL PROJECT	SHEET No.	TOTAL SHEETS
04	Ala	80,580	2.8, R41.2/47.0	204	315

Jeri-Paul Fabian 6/11/14
REGISTERED CIVIL ENGINEER DATE

6-23-14
PLANS APPROVAL DATE

REGISTERED PROFESSIONAL ENGINEER Jeri-Paul F. Fabian No. 81174 Exp. 9-30-15 CIVIL STATE OF CALIFORNIA

THE STATE OF CALIFORNIA OR ITS OFFICERS OR AGENTS SHALL NOT BE RESPONSIBLE FOR THE ACCURACY OR COMPLETENESS OF SCANNED COPIES OF THIS PLAN SHEET.

OVERHEAD SIGN PANEL DETAILS AND QUANTITIES

SHEET No.	SIGN LETTER	SIGN CODE	SIGN PANEL SIZE (IN x IN)	FWBT	FEBT	REMOVE SIGN FROM SIGN FRAME (N) (EA)	REMOVE SIGN PANEL & REMOVABLE SIGN PANEL FRAME (N) (EA)	1 FURNISH FORMED SIGN PANEL (OVERHEAD) (SQFT)	FURNISH RSPF w/ SIGN PANELS ATTACHED (LB)	1 FURNISH LAMINATED SIGN PANEL (1"-TYPE A) (SQFT)	INSTALL SIGN PANEL ON EXISTING FRAME (SQFT)	INSTALL REMOVABLE SIGN PANEL FRAME (LB)	SIGN FACING MATERIAL: BACKGROUND: SHEETING COLOR	BACKGROUND: RETROREFLECTIVE ASTM TYPE	LEGEND: SHEETING COLOR	LEGEND: RETROREFLECTIVE ASTM TYPE	PREMIUM PROTECTIVE OVERLAY	REMARKS
S-11	V	G83	216 x 90	X		1												
		G83-5(CA)	216 x 90	X				135			135		GREEN	XI	WHITE	XI	X	
	W	G23	336 x 90	X		1												
		G23(CA)	336 x 90	X				210			210		GREEN	XI	WHITE	XI	X	
	X	G23	336 x 90		X	1												
		G23(CA)	336 x 90		X			210			210		GREEN	XI	WHITE	XI	X	
S-12	Y	G85	240 x 70	X		1												
		G85-1(CA)	240 x 70	X				116.67			116.67		GREEN	XI	WHITE	XI	X	
	Z	G86	192 x 70		X	1												BM
		G86-13(CA)	192 x 70		X			93.33			93.33		GREEN	XI	WHITE	XI	X	
S-13	AA	G85	168 x 70		X	1												
		G85-11(CA)	168 x 70		X			81.67			81.67		GREEN	XI	WHITE	XI	X	
S-14	AB	G83	240 x 70	X		1												
		G83-5(CA)	240 x 70	X				116.67			116.67		GREEN	XI	WHITE	XI	X	
S-15	AC	G23	240 x 90	X		1												BM
		G23(CA)	240 x 90	X				150			150		GREEN	XI	WHITE	XI	X	
	AD	G23	240 x 90		X	1												BM
		G23(CA)	240 x 90		X			150			150		GREEN	XI	WHITE	XI	X	
S-16	AE	G85	240 x 70	X		1												BM
		G85-11(CA)	240 x 70	X						116.67	116.67		GREEN	XI	WHITE	XI	X	
	AF	G24	312 x 70		X	1												BM
		G83	216 x 70		X	1												
		G24(CA)	312 x 70		X			151.67			151.67		GREEN	XI	WHITE	XI	X	
		G83-5(CA)	216 x 70		X			105			105		GREEN	XI	WHITE	XI	X	
S-17	AG	G86	216 x 100	X		1												
		G86-13(CA)	216 x 100	X				150			150		GREEN	XI	WHITE	XI	X	
	AH	G85	216 x 70		X	1												BM
		G85-11(CA)	216 x 70		X					105	105		GREEN	XI	WHITE	XI	X	
S-18	AI	G23	264 x 90	X		1												
		G23(CA)	264 x 90	X				165			165		GREEN	XI	WHITE	XI	X	
	AJ	G23	264 x 90		X	1												
		G23(CA)	264 x 90		X			165			165		GREEN	XI	WHITE	XI	X	
SHEET TOTAL								2000.01		221.67	2221.68							
SHEET SQ-1 TOTAL								3017.78	1614		3017.78	1614						
SHEET SQ-2 TOTAL								2958.34	583		2958.34	583						
GRAND TOTAL								7976.13	2197	221.67	8197.80	2197						

(N) - NOT A SEPARATE PAY ITEM, FOR INFORMATION ONLY

1 REPLACED PER ADDENDUM No. 1 DATED JANUARY 5, 2015

SIGN QUANTITIES

SQ-3

STATE OF CALIFORNIA - DEPARTMENT OF TRANSPORTATION
Caltrans TRAFFIC

CALCULATED-DESIGNED BY	CHECKED BY	FUNCTIONAL SUPERVISOR	REVISED BY	DATE REVISED
JERI-PAUL F. FABIAN	CLAUDIA FANG	LOURDES DAVID	JF	6/11/14

LAST REVISION 06-11-14 | DATE PLOTTED => 29-DEC-2014 TIME PLOTTED => 12:26

Dist	COUNTY	ROUTE	POST MILES TOTAL PROJECT	SHEET No.	TOTAL SHEETS
04	Ala	80,580	2.8, R41.2/47.0	205	315

Jeri-Paul Fabian 6/11/14
REGISTERED CIVIL ENGINEER DATE

6-23-14
PLANS APPROVAL DATE

REGISTERED PROFESSIONAL ENGINEER Jeri-Paul F. Fabian No. 81174 Exp. 9-30-15 CIVIL STATE OF CALIFORNIA

THE STATE OF CALIFORNIA OR ITS OFFICERS OR AGENTS SHALL NOT BE RESPONSIBLE FOR THE ACCURACY OR COMPLETENESS OF SCANNED COPIES OF THIS PLAN SHEET.

1 1

ROADSIDE SIGN QUANTITIES AND MATERIALS SUMMARY

SHEET No.	SIGN No.	SIGN CODE	SIGN PANEL SIZE	WOOD POST SIZE AND LENTH		REMOVE ROADSIDE SIGN	ROADSIDE SIGN ONE POST	~~SINGLE SHEET~~ FURNISH SINGLE SHEET ALUMINUM SIGN (0.080"-UNFRAMED)	SIGN FACING MATERIAL				PREMIUM PROTECTIVE OVERLAY	REMARKS
									BACKGROUND		LEGEND			
				4" x 6"	6" x 6"		~~ONE POST~~	~~UNFRAMED ALUMINUM 0.080"~~	SHEETING COLOR	RETRO REFLECTIVE ASTM TYPE	SHEETING COLOR	RETRO REFLECTIVE ASTM TYPE		
			IN x IN	FT		EA	EA	SQFT						
S-4	1	G84				1								
	2	G84-3(19B)(CA)	48 x 60		17		1	20	GREEN	XI	WHITE	XI	X	
S-7	3	G84				1								
	4	G84-3(21A)(CA)	48 x 60		17		1	20	GREEN	XI	WHITE	XI	X	
S-16	5	G84				1								
	6	G84-3(22B)(CA)	48 x 60		17		1	20	GREEN	XI	WHITE	XI	X	
S-17	7	W4-1R				1								
	8	W4-1R	48 x 48	17.16			1	16	YELLOW	XI	BLACK	PLAIN	X	
TOTAL						4	4	76						

1 REPLACED PER ADDENDUM No. 1 DATED JANUARY 5, 2015

SIGN QUANTITIES

SQ-4

STATE OF CALIFORNIA - DEPARTMENT OF TRANSPORTATION
Caltrans
TRAFFIC

FUNCTIONAL SUPERVISOR: LOURDES DAVID
CALCULATED-DESIGNED BY: JERI-PAUL F. FABIAN
CHECKED BY: CLAUDIA FANG
REVISED BY: JF
DATE REVISED: 6/11/14

LAST REVISION 06-11-14
DATE PLOTTED => 29-DEC-2014
TIME PLOTTED => 12:26

Dist	COUNTY	ROUTE	POST MILES TOTAL PROJECT	SHEET No.	TOTAL SHEETS
04	Ala	80,580	2.8, R41.2/47.0	209	315

REGISTERED CIVIL ENGINEER 5/13/14 DATE

6-23-14
PLANS APPROVAL DATE

REGISTERED PROFESSIONAL ENGINEER Yalin Wang No. 57007 Exp. 6-30-15 CIVIL STATE OF CALIFORNIA

THE STATE OF CALIFORNIA OR ITS OFFICERS OR AGENTS SHALL NOT BE RESPONSIBLE FOR THE ACCURACY OR COMPLETENESS OF SCANNED COPIES OF THIS PLAN SHEET.

REMOVE GUARDRAIL

SHEET No.	STATION LIMITS	LENGTH LF
L-2	WB1 136+79.20 TO 137+54.30	75.1
	WB1 137+60.00 TO 139+50.70	190.7
L-3	E 15+50 TO 19+50	400.0
	E 15+97.50 TO 17+83.50	186.0
L-4	E 19+50 TO E 23+73	423.0
	E 22+64.73 TO 23+27.23	62.5
	W 21+22 TO 21+72	50.0
L-5	W 34+33.50 TO 35+47.50	114.0
	SW 47+53.50 TO 47+88	34.5
	M1 47+51 TO 47+88	37.0
L-6	EN 49+20 TO 49+66.84	46.8
	ES 49+56.36 TO 51+35.83	179.5
	F 54+27 TO 55+14.21	87.2
	F 54+27 TO 58+90.30	463.3
	F 55+78.90 TO 59+02.63	323.7
	F 60+37 TO 60+96	59.0
	F 60+43.90 TO 60+96	52.1
	F 60+40 TO 62+58	218.0
	F 60+59.97 TO B1 62+71.05	211.1
L-7	F 65+75.17 TO WN 70+05.12	480.0
	F 65+71.68 TO 70+13.61	441.9
	WS 72+15.77 TO 75+63.98	440.3
	WS 74+32.13 TO 78+50	417.9
L-8	WS 78+50 TO 81+51.98	302.0
	B1 82+17.33 TO 82+61	87.3
L-9	F 99+52.03 TO 99+65.82	13.8
	O4 99+70.07 TO O4 100+62.50	92.4
	F 101+81 TO 102+54.23	73.2
L-10	F 116+36.77 TO 116+97.40	60.6
L-11	O3 121+86 TO 122+48.50	62.5
	F 129+92.15 TO 130+67.15	75.0
L-12	F 135+85 TO 136+60	75.0
	FS 39+67 TO 43+34.61	367.6
	F 143+34.61 TO 144+54	119.4
	FG 39+20 TO 40+07.50	87.5
	F 139+50 TO 141+44.83	194.8
L-13	F 154+32.17 TO 156+00	167.8
L-14	LL3 64+52 TO 65+43	91.0
	F 166+85 TO 167+47.50	62.5
	F 171+59.57 TO 172+22.07	62.5
L-16	F 190+78.33 TO 191+40.83	62.5
	F 192+82 TO 194+81.83	199.8
	F 197+00.82 TO 197+63.32	62.5
L-17	F1 213+33 TO 214+22	89.0
	F1 213+81.33 TO 214+86	104.7
	F1 220+86 TO 221+66.93	80.9
	F1 218+47 TO 222+01.83	354.83
	F1 224+06.17 TO 224+68.67	62.5
	F1 224+31.17 TO 226+50	218.8
L-18	F1 226+50 TO 227+79.83	129.8
	E1 21+30 TO 21+45	30.0
	E1 21+97.17 TO 22+59.67	62.5
	F1 235+79 TO 236+82.71	103.7
	F1 236+75.43 TO 237+77.40	102.0
L-19	F1 245+26 TO 246+22	96.0
	F1 246+67 TO 247+11	44.0
	H2 38+81.69 TO 39+44.19	62.5
	G 41+17 TO 44+17	300.0
	F1 252+85.25 TO 253+54	68.8

REMOVE GUARDRAIL (CONTINUED)

SHEET No.	STATION LIMITS	LENGTH LF
L-20	F1 255+20 TO 257+48.83	228.8
	F1 263+64.92 TO 264+27.42	62.5
L-21	F1 269+23.50 TO 269+86	62.5
TOTAL		~~353.8~~ 9547.1

1

CONCRETE BARRIER

SHEET No.	STATION LIMITS	TYPE 60	TYPE 60R Mod
		LF	
L-3	E 15+50 TO 19+50	400	
L-4	E 19+50 TO 23+73	423	
	W 21+22 TO 24+08	286	
L-6	F 60+47.61 TO 61+17.46	137	
L-17	F1 213+41.06 TO 214+16.56		75.5
	F1 213+81.33 TO 214+56.83		75.5
L-18	F1 236+06.64 TO 236+82.71		76.1
	F1 236+75.43 TO 237+50.88		75.5
TOTAL		1246	302.6

CONCRETE BARRIER (ANCHOR BLOCK)

SHEET No.	TYPE 1	TYPE 1 Mod	TYPE 2	TYPE 25	TYPE WALL Mod	TYPE WALL	LENGTH
	EA						LF
L-3				1			3.5
L-4		1					10.2
L-5	2						7.0
L-6	2	5					58.0
L-7	5	3					48.1
L-8		2	1				64.1
L-9		1	1				53.9
L-10		1			1		10.2
L-11							3.5
L-12		1					10.2
L-13		1					10.2
L-14					2		7.0
L-16		3					30.6
L-17		4					40.8
L-18		2	1				64.1
L-19					2	1	16.3
L-20		2					20.4
L-21					1		3.5
TOTAL							461.4

1

1 REPLACED PER ADDENDUM No. 1 DATED JANUARY 5, 2015

SUMMARY OF QUANTITIES

Q-4

STATE OF CALIFORNIA - DEPARTMENT OF TRANSPORTATION
Caltrans DESIGN

FUNCTIONAL SUPERVISOR: KENDALL KITAMURA
CALCULATED-DESIGNED BY: LITA LEE
CHECKED BY: YALIN WANG
REVISED BY: LL
DATE REVISED: 5/12/14

LAST REVISION 06-06-14
DATE PLOTTED => 29-DEC-2014
TIME PLOTTED => 12:26

Dist	COUNTY	ROUTE	POST MILES TOTAL PROJECT	SHEET No.	TOTAL SHEETS
04	Ala	80,580	2.8, R41.2/47.0	210	315

REGISTERED CIVIL ENGINEER 5/13/14 DATE

6-23-14
PLANS APPROVAL DATE

REGISTERED PROFESSIONAL ENGINEER Yalin Wang No. 57007 Exp. 6-30-15 CIVIL STATE OF CALIFORNIA

THE STATE OF CALIFORNIA OR ITS OFFICERS OR AGENTS SHALL NOT BE RESPONSIBLE FOR THE ACCURACY OR COMPLETENESS OF SCANNED COPIES OF THIS PLAN SHEET.

REMOVE AC DIKE

SHEET No.	STATION LIMITS	LENGTH LF
L-2	WB1 136+79.20 TO 139+75.7	297
L-3	E 15+97.50 TO 19+50	353
L-4	E 19+50 TO 23+27.23	377
	W 21+22 TO 24+08	286
L-5	W 34+33.50 TO 40+88	655
L-6	ES 48+50 TO 51+35.83	286
	F 54+27 TO 58+90.30	463
L-7	F 65+71.68 TO 70+13.61	442
	F 65+75.17 TO 70+25.22	450
	WS 72+15.77 TO 76+10	394
	NE 72+10 TO 78+50	640
	SE1 71+90 TO 78+50	660
L-8	WS 79+50 TO 80+47.54	98
	B1 78+50 TO 82+61	411
L-9	F 99+20 TO 102+54.23	334
L-11	F 124+92 TO 132+02	710
	F 134+29.50 TO 134+50	21
L-12	F 134+50 TO 134+69	19
	F 134+50 TO 139+48	498
L-13	F 155+25 TO 156+91	166
	F 154+32.17 TO 161+47	715
L-15	F 180+49.50 TO 182+00	151
	NR1 82+00 TO 85+42.30	342
	F 185+40.70 TO 189+50	410
L-16	F 192+82 TO 194+81.83	200
	F 189+50 TO 191+40.83	191
	F 196+94 TO 198+65.58	172
	F1 207+79.12 TO 212+50	471
	F1 197+00.82 TO 198+65.58	165
	F1 207+79.12 TO 212+50	471
L-17	F1 212+50 TO 213+81.33	131
	F1 214+35.66 TO 221+66.93	731
	F1 214+25.23 TO 222+01.83	777
	F1 224+06.17 TO 226+50	244
L-18	F1 226+50 TO 229+08	258
	F1 229+05 TO 231+26.20	221
	F1 239+41 TO 240+50	109
L-19	F1 240+50 TO 246+22	572
	F1 252+22 TO 254+50	228
	F1 253+80 TO 254+50	70
L-20	F1 254+50 TO 257+48.83	299
	F1 254+50 TO 257+59	309
	F1 263+64.92 TO 265+62	197
	F1 263+36 TO 268+82	546
L-21	F1 269+23.50 TO 270+56	133
TOTAL		15521

1

TEMPORARY FIBER ROLL

SHEET No.	LENGTH LF
W-1 TO W-15	8000

1 REPLACED PER ADDENDUM No. 1 DATED JANUARY 5, 2015

SUMMARY OF QUANTITIES

Q-5

STATE OF CALIFORNIA - DEPARTMENT OF TRANSPORTATION
Caltrans DESIGN

FUNCTIONAL SUPERVISOR: KENDALL KITAMURA
CALCULATED-DESIGNED BY: LITA LEE
CHECKED BY: YALIN WANG
REVISED BY: LL
DATE REVISED: 5/12/14

LAST REVISION 06-05-14 | DATE PLOTTED => 29-DEC-2014 | TIME PLOTTED => 12:26

Dist	COUNTY	ROUTE	POST MILES TOTAL PROJECT	SHEET No.	TOTAL SHEETS
04	Ala	80,580	2.8, R41.2/47.0	211	315

REGISTERED CIVIL ENGINEER 5/13/14 DATE

6-23-14
PLANS APPROVAL DATE

REGISTERED PROFESSIONAL ENGINEER Yalin Wang No. 57007 Exp. 6-30-15 CIVIL STATE OF CALIFORNIA

THE STATE OF CALIFORNIA OR ITS OFFICERS OR AGENTS SHALL NOT BE RESPONSIBLE FOR THE ACCURACY OR COMPLETENESS OF SCANNED COPIES OF THIS PLAN SHEET.

RUMBLE STRIP QUANTITIES

SHEET No.	DIRECTION	STATION LIMITS	LENGTH STA
L-3	WB	MW 15+55 TO 15+97.19	0.42
		W 15+97.19 TO 19+49.78	3.53
L-4		W 19+49.78 TO 24+00	4.50
L-5		W 34+30.68 TO 40+98.05	6.67
		F 41+00 TO 42+91.97	1.92
		F 43+77.73 TO 48+49.98	4.72
L-6		F 48+49.98 TO 51+29.92	2.8
L-7		F 65+49.90 TO 70+27.45	4.78
		F 72+00 TO 78+50.25	6.50
L-8		F 78+50.25 TO 81+81.24	3.31
		F 82+11.07 TO 88+72.18	6.61
L-9		F 99+35.52 TO 106+50.32	7.15
L-10		F 106+50.32 TO 107+29.41	0.79
		F 111+70.33 TO 120+50.60	8.80
L-11		F 120+50.60 TO 134+49.83	13.99
L-12		F 134+49.83 TO 144+54	10.04
L-13		F 154+29.68 TO 161+49.90	7.20
L-14		F 161+49.90 TO 175+50.21	14.00
L-15		F 175+50.21 TO 189+50.14	14.00
L-16		F 189+50.14 TO 194+66.72	5.17
		F 196+95.50 TO F1 212+49.97	15.55
L-17		F1 212+49.97 TO 221+71.61	9.22
		F1 223+73.88 TO 226+49.99	2.76
L-18		F1 226+49.99 TO 229+08.44	2.58
		F1 230+09.77 TO 240+50.13	10.40
L-19		F1 240+50.13 TO 254+50.22	14.00
L-20		F1 254+50.22 TO 257+60.22	3.10
		F1 263+35.89 TO 268+50.09	5.14
L-21		F1 268+50.09 TO 272+00	3.50
L-1	EB	EB2 153+63.57 TO 161+53.42	7.90
L-2		EB2 161+53.42 TO 171+85.17	10.32
L-3		E 15+52.02 TO 19+33.59	3.82
L-4		E 19+33.59 TO 23+40.25	4.07
L-5		E 34+67.02 TO 40+64.10	5.97
		F 41+00 TO 43+09.58	2.10
		F 43+92.19 TO 48+49.98	4.58
L-6		F 48+49.98 TO 51+45.44	2.96
L-7		F 65+49.90 TO 70+27.45	4.78
		F 72+00 TO 78+50.25	6.50
L-8		F 82+90.83 TO 88+72.18	5.81
L-9		F 99+19.24 TO 106+50.32	7.31
L-10		F 106+50.32 TO 107+09.47	0.59
L-11		F 124+54.75 TO 134+50.02	9.95
L-12		F 134+50.02 TO 136+99.91	2.50
		F 139+65 TO 145+77.20	6.12
L-13		F 153+70.99 TO 161+49.90	7.79
L-14		F 161+49.90 TO 175+50.21	14.00
L-15		F 175+50.21 TO 189+50.14	14.00
L-16		F 189+50.14 TO 194+50.33	5.00
		F 196+94 TO F1 212+49.97	15.56
L-17		F1 212+49.97 TO 222+00	9.50
		F1 223+92.19 TO 226+49.99	2.58
L-18		F1 226+49.99 TO 227+90	1.40
		F1 228+93.02 TO 240+50.13	11.57
L-19		F1 240+50.13 TO 254+50.22	14.00
L-20		F1 254+50.22 TO 257+59	3.09
		F1 263+36 TO 268+49	5.13
L-21		F1 268+49 TO 272+00	3.51
TOTAL			385.56

1 REPLACED PER ADDENDUM No. 1 DATED JANUARY 5, 2015

GRIND EXISTING CONCRETE PAVEMENT

SHEET No.	STATION LIMITS	SQYD
L-3	E 15+50 TO 19+50	2131
L-4	E 19+50 TO 23+40	2245
L-5	E 33+50 TO 48+50	9583
L-6	F 48+50 TO 63+50	9876
L-7	F 65+50 TO 78+50	14234
L-8	F 78+50 TO 88+80	10538
L-9	F 99+20 TO 106+50	7664
L-10	F 106+50 TO 120+50	10100
L-11	F 120+50 TO 134+50	14934
L-12	F 134+50 TO 145+80	12001
L-13	F 153+30 TO 160+50	4233
L-14	F 161+50 TO 175+50	7432
L-15	F 175+50 TO 189+50	7453
L-16	F 189+50 TO F1 212+50	9520
L-17	F1 212+50 TO 226+50	12860
L-18	F1 226+50 TO 240+50	13883
L-19	F1 240+50 TO 254+50	14536
L-20	F1 254+50 TO 268+50	8688
L-21	F1 268+50 TO 272+00	3737
TOTAL		175648

WATER POLLUTION CONTROL QUANTITIES

SHEET No.	TEMPORARY DRAINAGE INLET PROTECTION EA
L-1	2
L-2	2
L-5	10
L-6	9
L-7	7
L-8	8
L-9	5
L-10	2
L-11	16
L-12	8
L-13	6
L-14	7
L-15	3
L-16	2
L-17	9
L-18	9
L-19	4
L-20	6
L-21	1
TOTAL	116

CRASH CUSHION

SHEET No.	STATION LIMITS	REMOVE CRASH CUSHION (SAND FILLED) EA	CRASH CUSHION, SAND FILLED (ARRAY U14) EA	CRASH CUSHION (TYPE SCI100GM) EA
L-5	SW 47+88	1	1	
L-6	ES 49+29	1	1	
	F 54+27	1		1
	F 60+96	1		1
L-7	F 70+28.98	1		1
	WS 76+00	1	1	
L-12	F 139+50	1		
	FS 139+60	1		
L-17	F1 213+19.56			1
	F1 214+56.83			1
L-18	F1 237+50.88			1
	E1 ~~E~~ 21+45	1	1	
TOTAL		9	4	6

1

SUMMARY OF QUANTITIES

Q-6

STATE OF CALIFORNIA - DEPARTMENT OF TRANSPORTATION
Caltrans DESIGN
FUNCTIONAL SUPERVISOR KENDALL KITAMURA
CALCULATED-DESIGNED BY LITA LEE CHECKED BY YALIN WANG
REVISED BY LL DATE REVISED 5/12/14

LAST REVISION 06-13-14 DATE PLOTTED => 29-DEC-2014 TIME PLOTTED => 12:26

Dist	COUNTY	ROUTE	POST MILES TOTAL PROJECT	SHEET No.	TOTAL SHEETS
04	Ala	80,580	2.8, R41.2/47.0	213	315

REGISTERED CIVIL ENGINEER 5/13/14 DATE

6-23-14
PLANS APPROVAL DATE

REGISTERED PROFESSIONAL ENGINEER Yalin Wang No. 57007 Exp. 6-30-15 CIVIL STATE OF CALIFORNIA

THE STATE OF CALIFORNIA OR ITS OFFICERS OR AGENTS SHALL NOT BE RESPONSIBLE FOR THE ACCURACY OR COMPLETENESS OF SCANNED COPIES OF THIS PLAN SHEET.

EARTHWORK AND TREATED WOOD WASTE QUANTITIES SUMMARY

SHEET No.	ANCHOR BLOCK EXCAVATION (N)	VEGETATION CONTROL EXCAVATION (N)	MGS POST EXCAVATION (N)	STRUCTURE EXCAVATION (TYPE Z-2) (ADL)	ROADWAY EXCAVATION (ADL)	NUMBER OF WOOD POST (N)	TREATED WOOD WASTE
	CY					EA	LB
L-2		3.5	2.5		6.0	34	3400
L-3	0.8	1.8	2.7		5.3	30	3000
L-4	0.8	3.7	1.9		6.4		
L-5	1.6				1.6	36	3600
L-6	14.0	33.4	22.1		163.3	322	32200
L-7	5.1	48.3	24.7		78.1	312	31200
L-8	0.4	6.5	3.7		55.8	49	4900
L-9	10.1	19.3			29.4		
L-10	0.4	1.8			2.2		
L-11	0.8	1.6	0.5		2.9	7	700
L-12	0.4	20.2	9.9		30.5	124	12400
L-13	0.4	3.4	1.6		5.4	18	1800
L-14	1.6	5.5	0.7		7.8	11	1100
L-16	1.2	7.6	2.6		11.4	29	2900
L-17	12.7	18	8.6		39.3	105	10500
L-18	11.9	4.1	1.6		17.6	18	1800
L-19	0.8	11.1	4.3		16.2	55	5500
L-20	0.8	6.3	2.5		9.6	28	2800
L-21	0.8	1.7			2.5		
D-2				213.5			
D-3				91.7			
D-4				103.6			
D-5				39.1			
D-6				57.1			
D-8				254.0			
D-10				68.8			
D-11				95.3			
D-12				65.9			
S-4						1	200
S-7						1	200
S-16						1	200
S-17						1	200
TOTAL				989.0	491.3		118600

1 (N) - NOT A PAYABLE ITEM, FOR INFORMATION ONLY

1

ABBREVIATION

ADL AERIALLY DEPOSITED LEAD

RECONSTRUCT GUARDRAIL

SHEET No.	STATION LIMITS	RECONSTRUCT GUARDRAIL
		LF
L-13	F 155+94 TO 156+00	12

HIGH FRICTION SURFACE TREATMENT ~~QUANTITY~~

SHEET No.	STATION LIMITS	~~HFST~~
		SQYD
L-13	F 154+20 TO 161+00	4987

EPOXY RESIN 1

UNLINED DITCH

SHEET No.	STATION LIMITS	LENGTH (N)	DITCH EXCAVATION
		FEET	CY
D-6	FS 36+70 TO 38+10	150	27.8

NOTE: DITCH EXCAVATION IS INCLUDED IN ROADWAY EXCAVATION (TYPE Z-2)(ADL)
(N) - NOT A SEPARATE PAY ITEM, FOR INFORMATION ONLY.

SHOULDER BACKING QUANTITY

SHEET No.	STATION LIMITS	SHOULDER BACKING
		TON
L-5	W 35+72.5 TO 40+88	3.5

1 **REPLACED PER ADDENDUM No. 1 DATED JANUARY 5, 2015**

SUMMARY OF QUANTITIES

Q-8

REVISED BY	DATE REVISED
LL	5/12/14

CALCULATED-DESIGNED BY: LITA LEE
CHECKED BY: YALIN WANG
FUNCTIONAL SUPERVISOR: KENDALL KITAMURA

STATE OF CALIFORNIA - DEPARTMENT OF TRANSPORTATION
Caltrans® DESIGN

LAST REVISION 06-05-14 | DATE PLOTTED => 29-DEC-2014 | TIME PLOTTED => 12:26

Dist	COUNTY	ROUTE	POST MILES TOTAL PROJECT	SHEET No.	TOTAL SHEETS
04	Ala	80,580	2.8, R41.2/47.0	214	315

REGISTERED CIVIL ENGINEER 5/13/14 DATE

6-23-14
PLANS APPROVAL DATE

REGISTERED PROFESSIONAL ENGINEER Yalin Wang No. 57007 Exp. 6-30-15 CIVIL STATE OF CALIFORNIA

THE STATE OF CALIFORNIA OR ITS OFFICERS OR AGENTS SHALL NOT BE RESPONSIBLE FOR THE ACCURACY OR COMPLETENESS OF SCANNED COPIES OF THIS PLAN SHEET.

HOT MIX ASPHALT DIKE

SHEET No.	STATION LIMITS	TYPE C	TYPE E	TYPE F	HMA (TYPE A)
		LF			TON
L-2	WB1 136+79.2 TO 139+13.00			233.8	2.7
	WB1 139+13 TO 139+75.7	62.7			0.4
L-3	E 15+97.5 TO 18+05			207.5	2.4
	E 18+05 TO 19+50		145.0		3.3
L-4	E 19+50 TO 22+29.33		279.3		6.4
	E 22+29.33 TO 22+99.33	70.0			0.5
	E 22+99.33 TO 23+27.23			27.9	0.3
L-5	W 34+33.5 TO 34+58.5			25.0	0.3
	W 34+58.5 TO 35+72.5	114.0			0.8
	W 35+72.5 TO 40+88		515.5		11.8
L-6	ES 49+56.36 TO 51+35.83			179.5	2.1
	F 54+27 TO 58+80.13			453.1	5.3
L-7	F 65+71.68 TO 70+13.61			441.9	5.1
	F 65+75.17 TO 70+25.22			450.1	5.2
	WS 72+15.77 TO 76+10			394.2	4.6
	NE 72+13.5 TO 74+35			221.5	2.6
	SE 71+90 TO 78+50		660.0		15.1
L-8	B1 78+50 TO 82+61		411.0		9.4
L-9	F 99+20 TO 101+56		236.0		5.4
	F 101+56 TO 102+29.23	73.2			0.5
	F 102+29.23 TO 102+54.23			25.0	0.3
L-11	F 124+92 TO 132+02		710.0		16.3
	F 124+56.38 TO 134+50		993.6		22.8
	F 134+29.5 TO 134+50		20.5		0.5
L-12	F 134+50 TO 134+69		19.0		0.4
	F 134+50 TO 135+85		135.0		3.1
	F 135+85 TO 136+22.5			37.5	0.4
	F 136+22.5 TO 136+85	62.5			0.4
	F 136+85 TO 139+48		263.0		6.0
L-13	F 154+32.17 TO 154+57.17			25.0	
	F 154+57.17 TO 156+25	167.8			1.1
	F 156+25 TO 161+47		522.0		12.0
L-14	F 165+43 TO 166+60		117.0		2.7
	F 166+60 TO 167+22.5	62.5			0.4
	F 167+22.5 TO 167+47.5			25.0	0.3
	F 168+00 TO 171+24.57		324.6		7.4
	F 171+24.57 TO 171+97.07	72.5			0.5
	F 171+97.07 TO 172+22.07			25.0	0.3
L-15	F 180+49.5 TO 182+00		150.5		3.4
	NR1 82+00 TO 85+42.3		342.3		7.8
	F 185+40 TO 189+50		410.0		9.4
L-16	F 189+50 TO 190+53.33		103.3		2.4
	F 190+53.33 TO 191+15.83	62.5			0.4
	F 191+15.83 TO 191+40.83			25.0	0.3
	F 197+00.82 TO 197+25.82			25.0	0.3
	F 197+25.82 TO 197+88.32	62.5			0.4
	F 197+88.32 TO 198+65.58		77.3		1.8
	F1 207+79.12 TO 208+75		95.9		2.2
	F 196+94 TO 198+65.58		171.6		3.9
	F1 207+79.12 TO 208+29.5		50.4		1.2

HOT MIX ASPHALT DIKE (CONTINUED)

SHEET No.	STATION LIMITS	TYPE C	TYPE E	TYPE F	HMA (TYPE A)
		LF			TON
L-17	F1 212+97.56 TO 213+19.56	22.0			0.1
	F1 213+19.56 TO 213+41.06			21.5	0.2
	F1 214+56.83 TO 214+78.33			21.5	0.2
	F1 214+78.33 TO 215+00.33	22.0			0.1
	F1 228+83.35 TO 220+61		177.7		4.1
	F1 220+61 TO 221+28	67.0			0.4
	F1 221+28 TO 221+66.93			38.9	0.5
	F1 224+06.17 TO 224+31.17			25.0	0.3
	F1 224+31.17 TO 224+93.67	62.5			0.4
	F1 224+93.67 TO 226+50		156.3		3.6
L-18	F1 226+50 TO 229+08		258.0		5.9
	F1 229+05 TO 231+26.2		221.2		5.1
	F1 235+00 TO 235+85.14	85.1			0.6
	F1 235+85.14 TO 236+06.64			21.5	0.2
	F1 237+50.88 TO 237+72.38			21.5	0.2
	F1 237+72.38 TO 237+94.38	22.0			0.1
L-18 TO L-19	F1 239.41 TO 245+26		585.0		13.4
L-19	F1 252+22 TO 254+50		228.0		5.2
	F1 253+80 TO 254+50		70.0		1.6
L-20	F1 254+50 TO 254+95		45.0		1.0
	F1 254+50 TO 257+59		309.0		7.1
	F1 254+95 TO 257+23.83	228.8			1.5
	F1 257+23.83 TO 257+48.83			25.0	0.3
	F1 263+64.92 TO 263+89.92			25.0	0.3
	F1 263+89.92 TO 264+52.42	62.5			0.4
	F1 263+36 TO 267+82		446.0		10.2
L-21	F1 269+23.5 TO 269+48.5			25.0	0.3
	F1 269+48.5 TO 270+11	62.5			0.4
	F1 270+11 TO 270+56		45.0		1.0
TOTAL		1444.6	9294.0	3046.9	257.3

1

CRASH CUSHION (TYPE SCI100GM) FOUNDATION AND PAVEMENT QUANTITIES

SHEET NO.	STATION LIMITS	ROADWAY EXCAVATION (TYPE Z-2) (ADL)	MINOR CONCRETE (Misc CONSTRUCTION)	HMA (TYPE A)
		CY		TON
L-6	F 54+27	2.9	2.3	
	F 62+09.4	2.9	2.3	
L-17	F1 212+97.56 TO 213+41.06	3.7	2.3	1.4
	F1 214+56.83 TO215+00.33	3.7	2.3	1.4
L-18	F1 237+50.88 TO 237+94.38	3.7	2.3	1.4
TOTAL		16.9	11.5	4.2

TEMPORARY SILT FENCE (Mod)

SHEET No.	STATION LIMITS	LF
L-2	WB1 136+79.20 TO 139+50.70	272

1

ABBREVIATION

ADL AERIALLY DEPOSITED LEAD

1 REPLACED PER ADDENDUM No. 1 DATED JANUARY 5, 2015

SUMMARY OF QUANTITIES

Q-9

REVISED BY	DATE REVISED
LL	5/12/14

LITA LEE — YALIN WANG — CALCULATED-DESIGNED BY — CHECKED BY

FUNCTIONAL SUPERVISOR: KENDALL KITAMURA

STATE OF CALIFORNIA - DEPARTMENT OF TRANSPORTATION — DESIGN — Caltrans

LAST REVISION 06-06-14 — DATE PLOTTED => 29-DEC-2014 — TIME PLOTTED => 12:26

Dist	COUNTY	ROUTE	POST MILES TOTAL PROJECT	SHEET No.	TOTAL SHEETS
04	Ala	80,580	2.8, R41.2/47.0	216	315

REGISTERED CIVIL ENGINEER 5/13/14 DATE

6-23-14
PLANS APPROVAL DATE

REGISTERED PROFESSIONAL ENGINEER Yalin Wang No. 57007 Exp. 6-30-15 CIVIL STATE OF CALIFORNIA

THE STATE OF CALIFORNIA OR ITS OFFICERS OR AGENTS SHALL NOT BE RESPONSIBLE FOR THE ACCURACY OR COMPLETENESS OF SCANNED COPIES OF THIS PLAN SHEET.

1

SIDE GUTTER, ISLAND, CURB AND GUTTER, DIGOUT AND HOT MIX ASPHALT (Misc AREA)

SHEET No.	DIRECTION	STATION LIMITS	REMOVE CONCRETE (CURB AND GUTTER)	REMOVE CONCRETE ISLAND (PORTIONS)	ROADWAY EXCAVATION	REPLACE ASPHALT CONCRETE SURFACING	PLACE HMA (MISCELLANEOUS AREA)		HMA (TYPE A)			
							SIDE GUTTER /SHOULDER	ISLAND	SIDE GUTTER	ISLAND	CURB AND GUTTER	SHOULDER
			LF	SQYD	CY		SQYD		TON			
L-6	EB	F 53+65.75 TO 54+27.00	221.5	144.0				144.0		161.6		
L-7	EB	F 65+49.46 TO 66+78.13				35.7						
L-8	WB	WS 79+50.00 TO 91+00.00	97.5	69.9				69.9		78.2		
	EB	F 78+50 TO 79+00		41.7				41.7		21.1		
L-10	EB	J 119+41.66 TO 120+09.83				22.7						
L-12	EB	F 135+39.16 TO FG 38+29.31				94.7						
	WB	F 144+00.00 TO 144+55.00				15.3						
L-15	WB	F 179+41.33 TO 182+60.62				106.8						
	WB	F 178+50.00 TO NL2 185+00.16	650.2								127.3	
L-16 TO L-17	WB	F1 208+75.00 TO 213+81.33			19.5		225.0		34.2			
	EB	F1 208+29.50 TO 212+97.56			18.0		208.0		31.6			
L-17	WB	F1 220+61.00 TO 222+00.00				38.6						
	WB	F1 214+56.83 TO 215+00.33			0.5		6.1					0.9
	EB	F1 212+97.56 TO 213+41.06			0.5		6.1					0.9
	WB	F1 215+00.33 TO 218+83.35			14.8		170.2		26			
	EB	F1 214+16.56 TO 218+11.87			14.9		171.8		26.1			
L-18	WB	F1 237+50.88 TO 237+94.38			0.5		6.1					0.9
	EB	F1 235+00.00 TO 237+26.00			51.8		207.0					90.9
	WB	F1 235+16.68 TO 236+75.43			6.1		70.6		10.7			
L-18 TO L-19	WB	F1 237+94.38 TO 240+76.35			10.9		125.3		19.1			
	EB	F1 237+26.00 TO 245+26.00			30.8		355.6		54.1			
L-20	WB	F1 264+52.42 TO 265+62.00			4.2		48.7		7.4			
SUBTOTAL			969.2	255.6	172.5	313.8	1600.5	254.6	209.2	260.9	127.3	93.6
TOTAL			969.2	255.6	172.5	313.8	1855.1		691.0			

1 REPLACED PER ADDENDUM No. 1 DATED JANUARY 5, 2015

SUMMARY OF QUANTITIES

Q-11

STATE OF CALIFORNIA - DEPARTMENT OF TRANSPORTATION
Caltrans DESIGN

FUNCTIONAL SUPERVISOR: KENDALL KITAMURA
CALCULATED-DESIGNED BY: LITA LEE
CHECKED BY: YALIN WANG
REVISED BY: LL
DATE REVISED: 5/12/14

LAST REVISION 06-17-14 | DATE PLOTTED => 29-DEC-2014 | TIME PLOTTED => 12:26

Dist	COUNTY	ROUTE	POST MILES TOTAL PROJECT	SHEET No.	TOTAL SHEETS
04	Ala	80,580	2.8, R41.2/47.0	219	315

REGISTERED CIVIL ENGINEER 5/13/14 DATE

6-23-14
PLANS APPROVAL DATE

REGISTERED PROFESSIONAL ENGINEER Yalin Wang No. 57007 Exp. 6-30-15 CIVIL STATE OF CALIFORNIA

THE STATE OF CALIFORNIA OR ITS OFFICERS OR AGENTS SHALL NOT BE RESPONSIBLE FOR THE ACCURACY OR COMPLETENESS OF SCANNED COPIES OF THIS PLAN SHEET.

1

REMOVE TRAFFIC STRIPES AND PAVEMENT MARKERS (ON BRIDGE DECKS AND APPROACH SLABS)

SHEET No.	TRAFFIC DIRECTION	STATION LIMITS	REMOVE THERMOPLASTIC TRAFFIC STRIPE WHITE	REMOVE YELLOW THERMOPLASTIC TRAFFIC STRIPE (HAZARDOUS WASTE)	REMOVE PAVEMENT MARKER
			LF		EA
L-4	WB	W 24+08 TO 33+50	4710	942	441
	EB	W 24+08 TO 33+50	3768	942	336
		W 24+08 TO 29+0	492		17
		W 29+00 TO 33+50	450		20
L-5	WB	W 33+50 TO 34+38.74	445	89	63
	EB	W 33+50 TO 34+38.74	445	89	53
	WB	W 42+71 TO 44+16.96	730	146	84
		W 42+71 TO 43+05.25	68		2
		W 43+05.25 TO 44+16.96	112	112	3
	EB	W 42+71 TO 44+16.96	584	146	64
		W 42+71 TO 42+80	18		5
L-6	WB	F 51+37.1 TO 52+83.4	584	146	64
		F 51+80.92 TO 52+46.76	66		
		F 52+46.76 TO 52+83.4	74		3
	EB	F 51+37.1 TO 52+83.4		146	4
		F 51+37.1 TO 52+60.4	246		12
		F 52+60.4 TO 52+83.4	23		
		ES 51+46 TO 52+59.62	114		21
	WB	F 59+03.4 TO 60+43.11	420	140	44
	EB	F 59+03.4 TO 60+43.11	420	140	44
L6 TO L-7	WB	F 62+63.96 TO 62+80	16		
		F 62+80 TO 65+49.52	270		12
		F 64+50 TO 65+49.52	100		5
		F 62+63.96 TO 65+49.52	572	286	77
	EB	F 62+63.96 TO 65+49.52	572	286	77
		F 62+63.96 TO 63+40	152		8
		F 63+40 TO 65+49.52	420	210	5
L-7	WB	F 70+28.98 TO 70+61.96	33		
		F 70+61.96 TO 72+10	296		14
		F 70+28.98 TO 72+10	362	181	55
	EB	F 70+28.98 TO 72+10	362	181	55
		F 70+28.98 TO 71+37.7	109		
		F 71+37.7 TO 72+10	72		
L-8	WB	WS 81+86.15 TO 83+20	402		27
		F 82+19.19 TO 83+10	91		10
		F 83+10 TO 83+60	50		3
		F 82+19.19 TO 83+60	423	141	51
	EB	F 82+19.19 TO 83+60	564	141	64
		F 82+19.19 TO 82+50			8
		F 82+50 TO 83+60	110		5
L-8 TO L-9	WB	F 88+69.29 TO 89+88.73	119		12
		F 89+88.73 TO 99+30.39	942		105
		F 88+69.29 TO 99+30.39	4244	1061	289
	EB	F 88+69.29 TO 99+30.39	4244	1061	368
		F 88+69.29 TO 91+74.32	305		11
		F 91+74.32 TO 94+74.32	300		28
		F 94+74.32 TO 97+44.36	540		24
		F 97+44.36 TO 99+30.39	186	186	5
L-10	WB	F 107+19.5 TO 111+72.37	1812	453	160
	EB	F 107+19.5 TO 111+72.37	1812	453	160
L-12 TO L-13	WB	F 145+72.37 TO 154+20	3392	848	304
	EB	F 145+72.37 TO 154+20	3392	848	304
L-17	WB	F1 221+95.41 TO 223+79.43	736	184	80
	EB	F1 221+95.41 TO 223+79.43	736	184	80
L-18	WB	F1 228+48 TO 229+55.54	432	108	48
	EB	F1 228+48 TO 229+55.54	432	108	48
L-20	WB	F1 257+59.2 TO 263+35.89	2308	577	208
	EB	F1 257+59.2 TO 263+35.89	2308	577	208
TOTAL			46985	11112	4198

1 REPLACED PER ADDENDUM No. 1 DATED JANUARY 5, 2015

SUMMARY OF QUANTITIES

Q-14

STATE OF CALIFORNIA - DEPARTMENT OF TRANSPORTATION
Caltrans DESIGN

FUNCTIONAL SUPERVISOR: KENDALL KITAMURA
CALCULATED-DESIGNED BY: LITA LEE
CHECKED BY: YALIN WANG
REVISED BY: LL
DATE REVISED: 5/12/14

LAST REVISION 05-14-14 | DATE PLOTTED => 29-DEC-2014 | TIME PLOTTED => 12:27