Dist	COUNTY	ROUTE	POST MILES TOTAL PROJECT	SHEET No.	TOTAL SHEETS
04	SCI	17	0.0/2.8	4	278

REGISTERED CIVIL ENGINEER 3-24-10 DATE

9-7-10
PLANS APPROVAL DATE

REGISTERED PROFESSIONAL ENGINEER James Chuang No. 74690 Exp. 12-31-11 CIVIL STATE OF CALIFORNIA

THE CTE OF CALIFORNIA OR ITS OFFICERS OR AGENTS SHALL NOT BE RESPONSIBLE FOR THE ACCURACY OR COMPLETENESS OF SCANNED COPIES OF THIS PLAN SHEET.

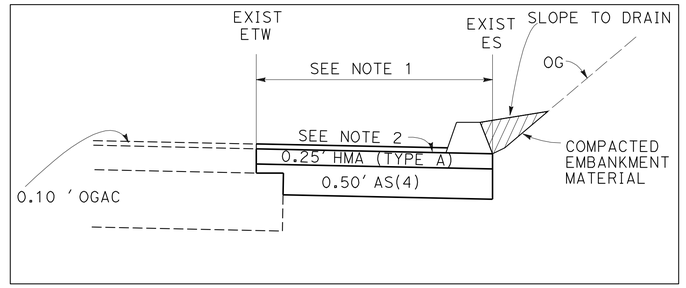

DETAIL D

NOTE 1: MAINTAIN 2' TO 6' WIDE SHOULDER EXACT MEASUREMENTS TO BE DETERMINED BY ENGINEER.

NOTE 2: TOP 0.10' OGFC LIFT SHALL BE PLACED IN STAGE 4.

2

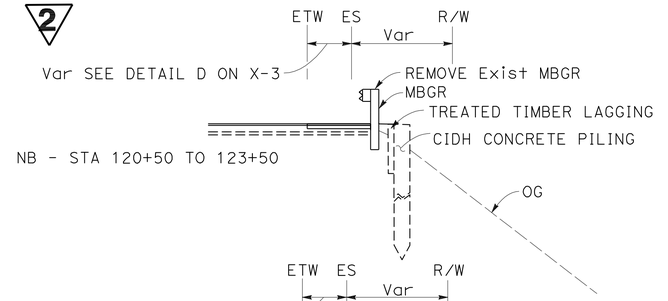

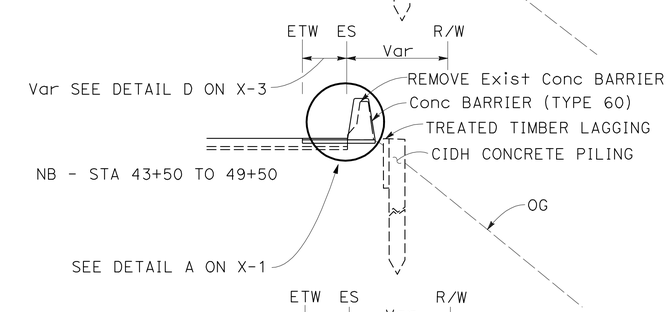

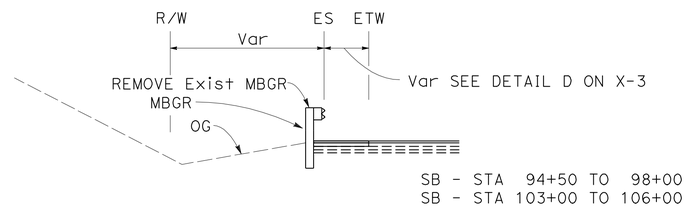

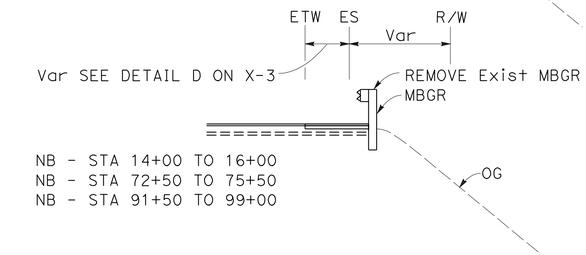

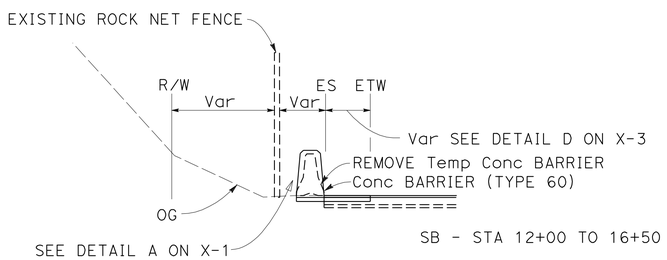

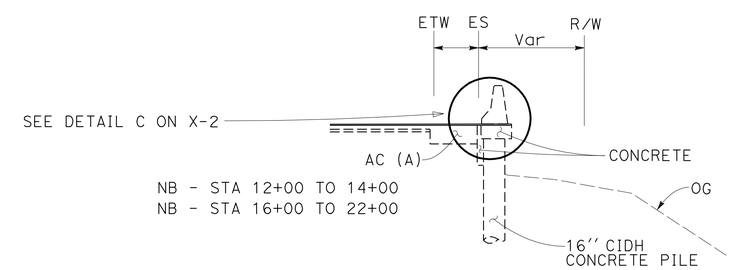

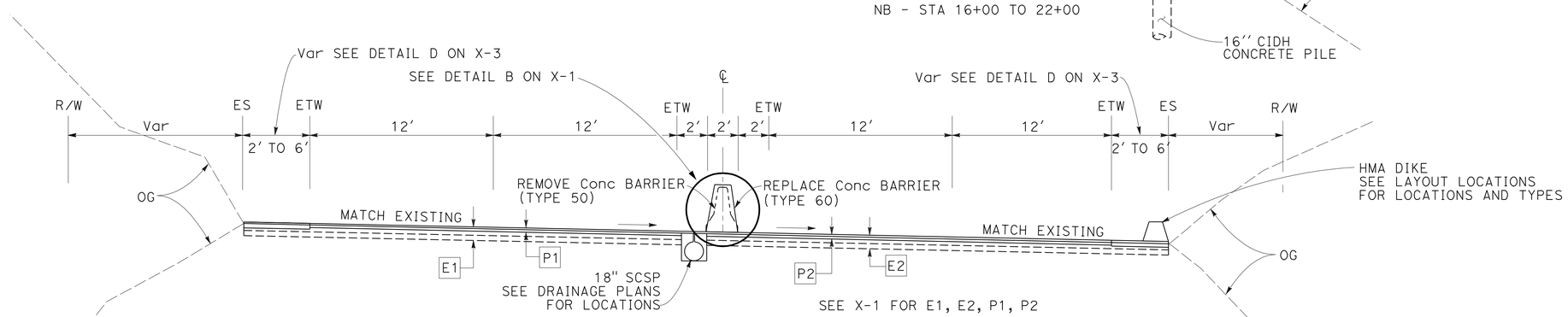

C LINE

C 10+50 TO 23+50
C 42+00 TO 53+00
C 70+50 TO 76+50
C 90+00 TO 109+00
C 119+50 TO 125+00

2 **REVISED PER ADDENDUM No. 2 DATED FEBRUARY 28, 2011**

FOR NOTES, ABBREVIATIONS AND LEGEND, SEE SHEET X-1

TYPICAL CROSS SECTIONS

NO SCALE

X-3

REVISED BY	DATE REVISED
GIANG KHUU	3/15/10
JAMES CHUANG	3/15/10

CALCULATED-DESIGNED BY / CHECKED BY

FUNCTIONAL SUPERVISOR: SHAWN ENJILY

CTE OF CALIFORNIA - DEPARTMENT OF TRANSPORTATION

Caltrans® **DESIGN**

LAST REVISION 03-29-10 | DATE PLOTTED => 23-FEB-2011 | TIME PLOTTED => 14:23

Dist	COUNTY	ROUTE	POST MILES TOTAL PROJECT	SHEET No.	TOTAL SHEETS
04	SCI	17	0.0/2.8	13A	278

REGISTERED CIVIL ENGINEER 3-24-10 DATE

9-7-10
PLANS APPROVAL DATE

REGISTERED PROFESSIONAL ENGINEER James Chuang No. 74690 Exp. 12-31-11 CIVIL STATE OF CALIFORNIA

THE STATE OF CALIFORNIA OR ITS OFFICERS OR AGENTS SHALL NOT BE RESPONSIBLE FOR THE ACCURACY OR COMPLETENESS OF SCANNED COPIES OF THIS PLAN SHEET.

2

FOR ACCURATE RIGHT OF WAY AND ACCESS DATA, CONTACT RIGHT OF WAY ENGINEERING AT THE DISTRICT OFFICE.

CURVE DATA

No.	R	Δ	T	L	N-COORDINATE	E-COORDINATE
9	495.00′	78°17′03″	402.88′	676.33′	1885299.80	6127607.13
10	500.00′	110°27′06″	720.10′	963.87′	1885302.99	6127611.00

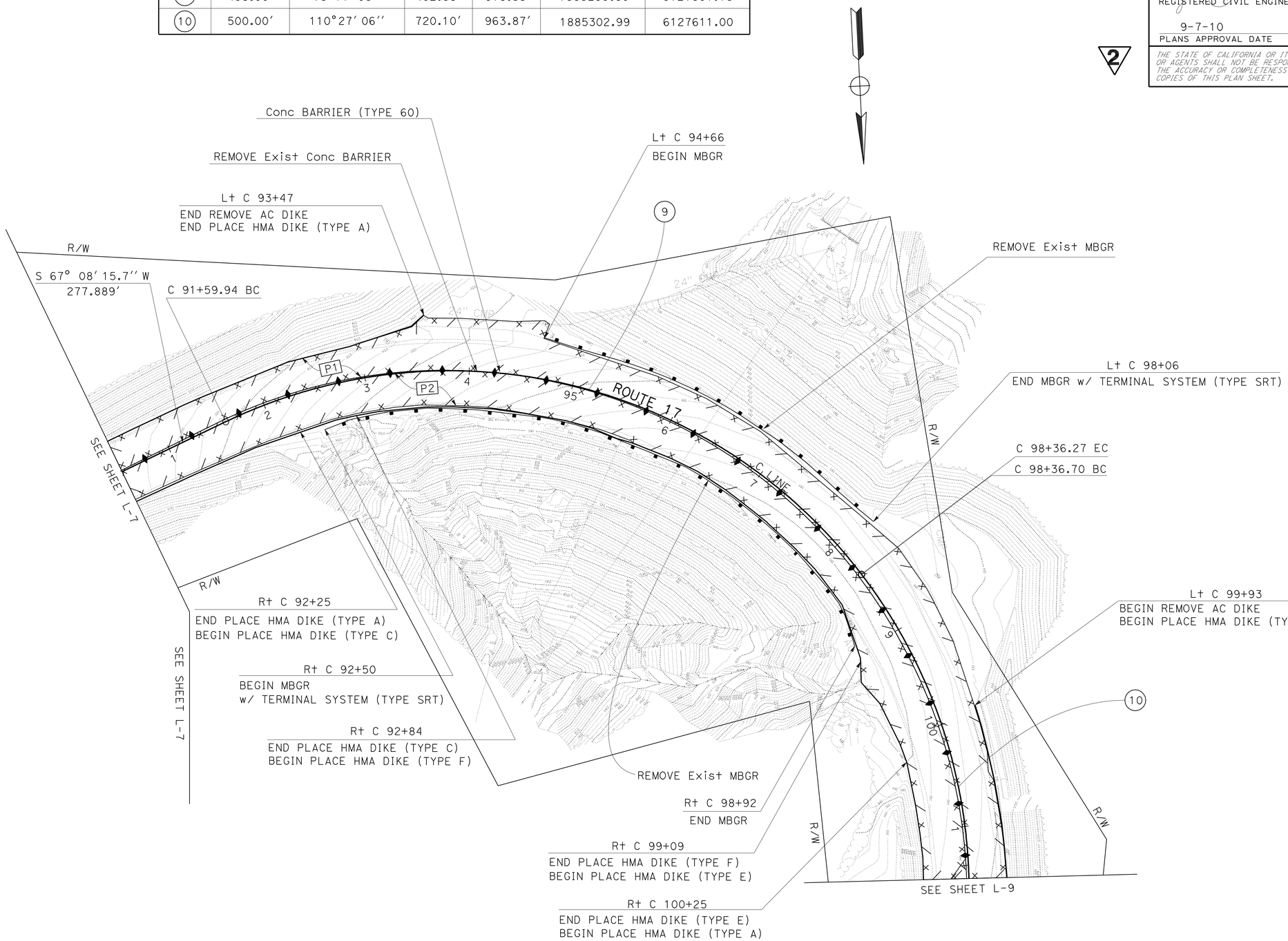

FOR NOTES, ABBREVIATIONS AND LEGEND, SEE SHEET L-1

2 **ADDED PER ADDENDUM No. 2 DATED FEBRUARY 28, 2011**

LAYOUT
SCALE: 1" = 50′

L-8

REVISED BY	DATE REVISED
GIANG KHUU	3/15/10

CALCULATED-DESIGNED BY	CHECKED BY
JAMES CHUANG	

FUNCTIONAL SUPERVISOR: SHAWN ENJILY

STATE OF CALIFORNIA - DEPARTMENT OF TRANSPORTATION
Caltrans
DESIGN

LAST REVISION 03-02-10 | DATE PLOTTED => 23-FEB-2011 | TIME PLOTTED => 10:49

Dist	COUNTY	ROUTE	POST MILES TOTAL PROJECT	SHEET No.	TOTAL SHEETS
04	SCI	17	0.0/2.8	13B	278

REGISTERED CIVIL ENGINEER 3-24-10 DATE

9-7-10
PLANS APPROVAL DATE

REGISTERED PROFESSIONAL ENGINEER James Chuang No. 74690 Exp. 12-31-11 CIVIL STATE OF CALIFORNIA

THE STATE OF CALIFORNIA OR ITS OFFICERS OR AGENTS SHALL NOT BE RESPONSIBLE FOR THE ACCURACY OR COMPLETENESS OF SCANNED COPIES OF THIS PLAN SHEET.

FOR ACCURATE RIGHT OF WAY AND ACCESS DATA, CONTACT RIGHT OF WAY ENGINEERING AT THE DISTRICT OFFICE.

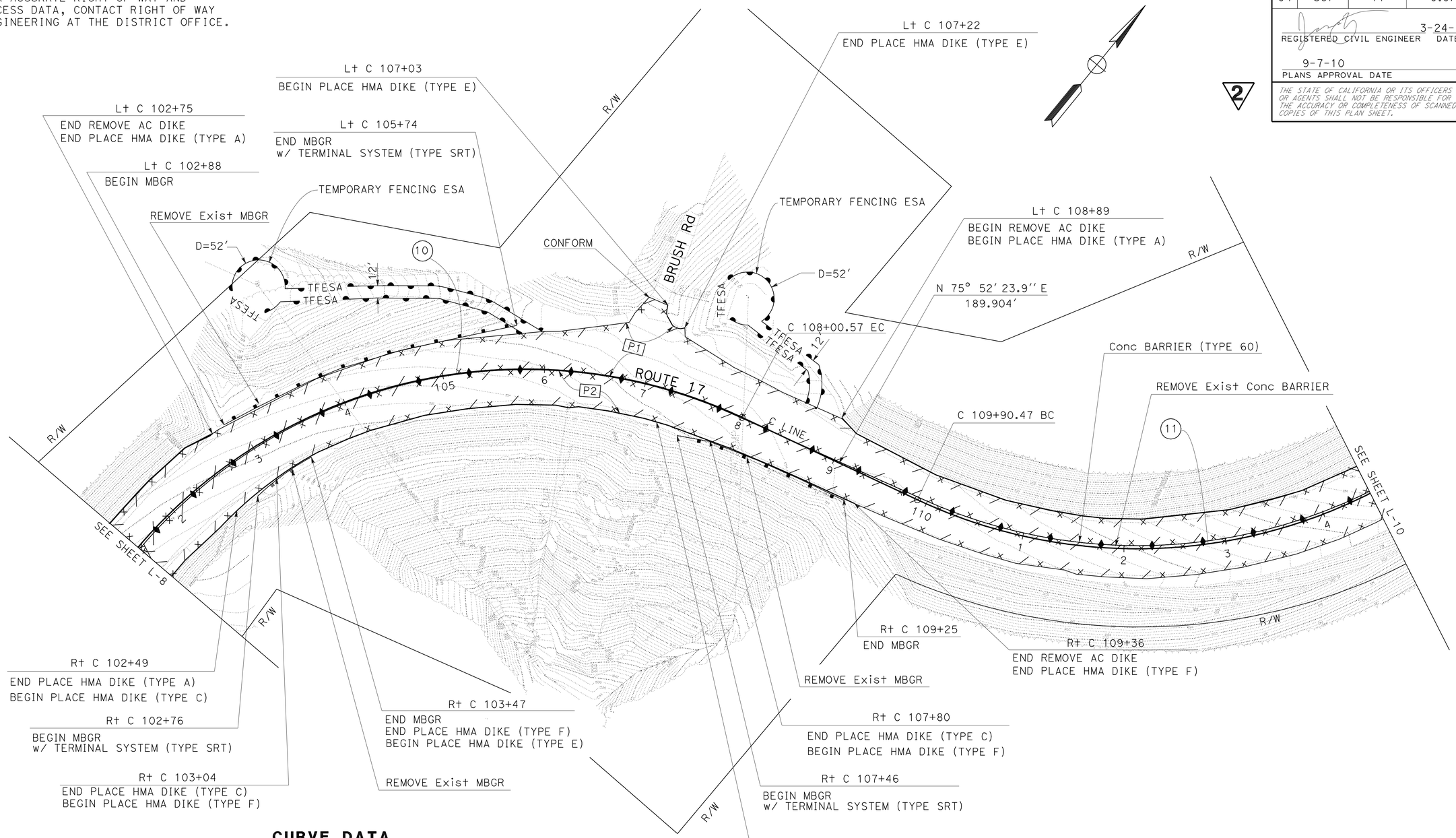

CURVE DATA

No.	R	Δ	T	L	N-COORDINATE	E-COORDINATE
10	500.00'	110°27' 06''	720.10'	963.87'	1885302.99	6127611.00
11	507.00'	100°54' 45''	614.08'	892.96'	1886325.89	6127549.38

FOR NOTES, ABBREVIATIONS AND LEGEND, SEE SHEET L-1

2 ADDED PER ADDENDUM No. 2 DATED FEBRUARY 28, 2011

LAYOUT
SCALE: 1" = 50'

L-9

REVISED BY	DATE REVISED
3/15/10	3/15/10

CALCULATED-DESIGNED BY: GIANG KHUU
CHECKED BY: JAMES CHUANG
FUNCTIONAL SUPERVISOR: SHAWN ENJILY

STATE OF CALIFORNIA - DEPARTMENT OF TRANSPORTATION
Caltrans
DESIGN

LAST REVISION 03-02-10 | DATE PLOTTED => 23-FEB-2011 | TIME PLOTTED => 10:49

FOR ACCURATE RIGHT OF WAY AND ACCESS DATA, CONTACT RIGHT OF WAY ENGINEERING AT THE DISTRICT OFFICE.

CURVE DATA

No.	R	Δ	T	L	N-COORDINATE	E-COORDINATE
11	507.00′	100°54′45″	614.08′	892.96′	1886325.89	6127549.38
12	1050.01′	15°6′45″	139.28′	276.95′	1887137.15	6128888.93

Dist	COUNTY	ROUTE	POST MILES TOTAL PROJECT	SHEET No.	TOTAL SHEETS
04	SCI	17	0.0/2.8	13C	278

REGISTERED CIVIL ENGINEER 3-24-10 DATE

9-7-10 PLANS APPROVAL DATE

REGISTERED PROFESSIONAL ENGINEER James Chuang No. 74690 Exp. 12-31-11 CIVIL STATE OF CALIFORNIA

THE STATE OF CALIFORNIA OR ITS OFFICERS OR AGENTS SHALL NOT BE RESPONSIBLE FOR THE ACCURACY OR COMPLETENESS OF SCANNED COPIES OF THIS PLAN SHEET.

2

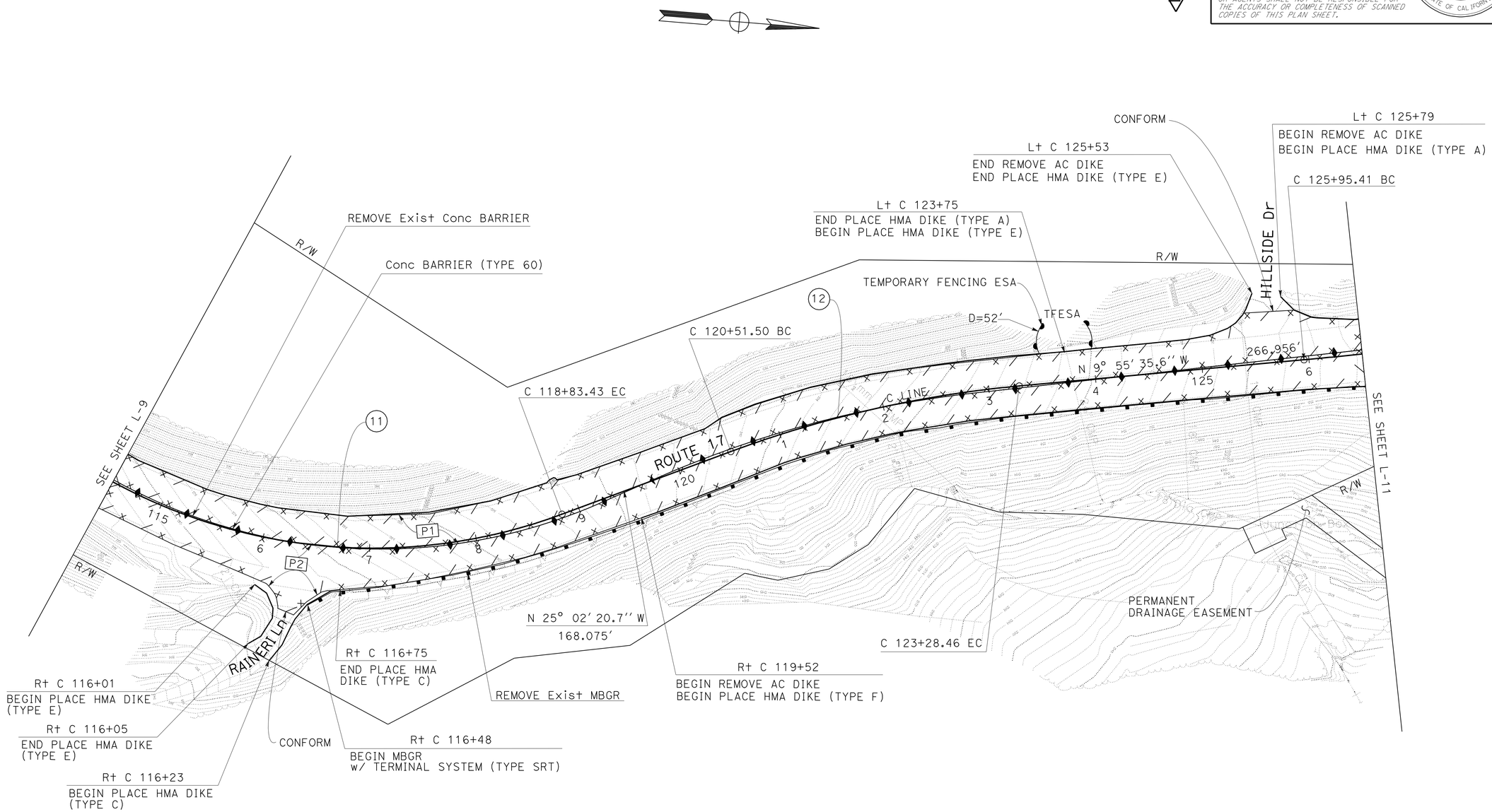

FOR NOTES, ABBREVIATIONS AND LEGEND, SEE SHEET L-I

2 **ADDED PER ADDENDUM No. 2 DATED FEBRUARY 28, 2011**

LAYOUT
SCALE: 1" = 50′

L-10

STATE OF CALIFORNIA - DEPARTMENT OF TRANSPORTATION
Caltrans DESIGN

FUNCTIONAL SUPERVISOR: SHAWN ENJILY
CALCULATED-DESIGNED BY: GIANG KHUU
CHECKED BY: JAMES CHUANG
REVISED BY: 3/15/10
DATE REVISED: 3/15/10

LAST REVISION 03-02-10
DATE PLOTTED => 23-FEB-2011
TIME PLOTTED => 10:46

BORDER LAST REVISED 4/11/2008
RELATIVE BORDER SCALE IS IN INCHES 0 1 2 3
USERNAME => trmartin
DGN FILE => 426490ea010.add
CU 04239
EA 264901

Dist	COUNTY	ROUTE	POST MILES TOTAL PROJECT	SHEET No.	TOTAL SHEETS
04	SCI	17	0.0/2.8	13D	278

REGISTERED CIVIL ENGINEER 3-24-10 DATE

9-7-10
PLANS APPROVAL DATE

REGISTERED PROFESSIONAL ENGINEER James Chuang No. 74690 Exp. 12-31-11 CIVIL STATE OF CALIFORNIA

THE STATE OF CALIFORNIA OR ITS OFFICERS OR AGENTS SHALL NOT BE RESPONSIBLE FOR THE ACCURACY OR COMPLETENESS OF SCANNED COPIES OF THIS PLAN SHEET.

FOR ACCURATE RIGHT OF WAY AND ACCESS DATA, CONTACT RIGHT OF WAY ENGINEERING AT THE DISTRICT OFFICE.

CURVE DATA

No.	R	Δ	T	L	N-COORDINATE	E-COORDINATE
13	4199.96′	4°46′52″	175.33′	350.46′	1886495.09	6123671.53
14	2599.99′	34°31′33″	807.96′	1566.73′	1886904.91	6125218.13

2

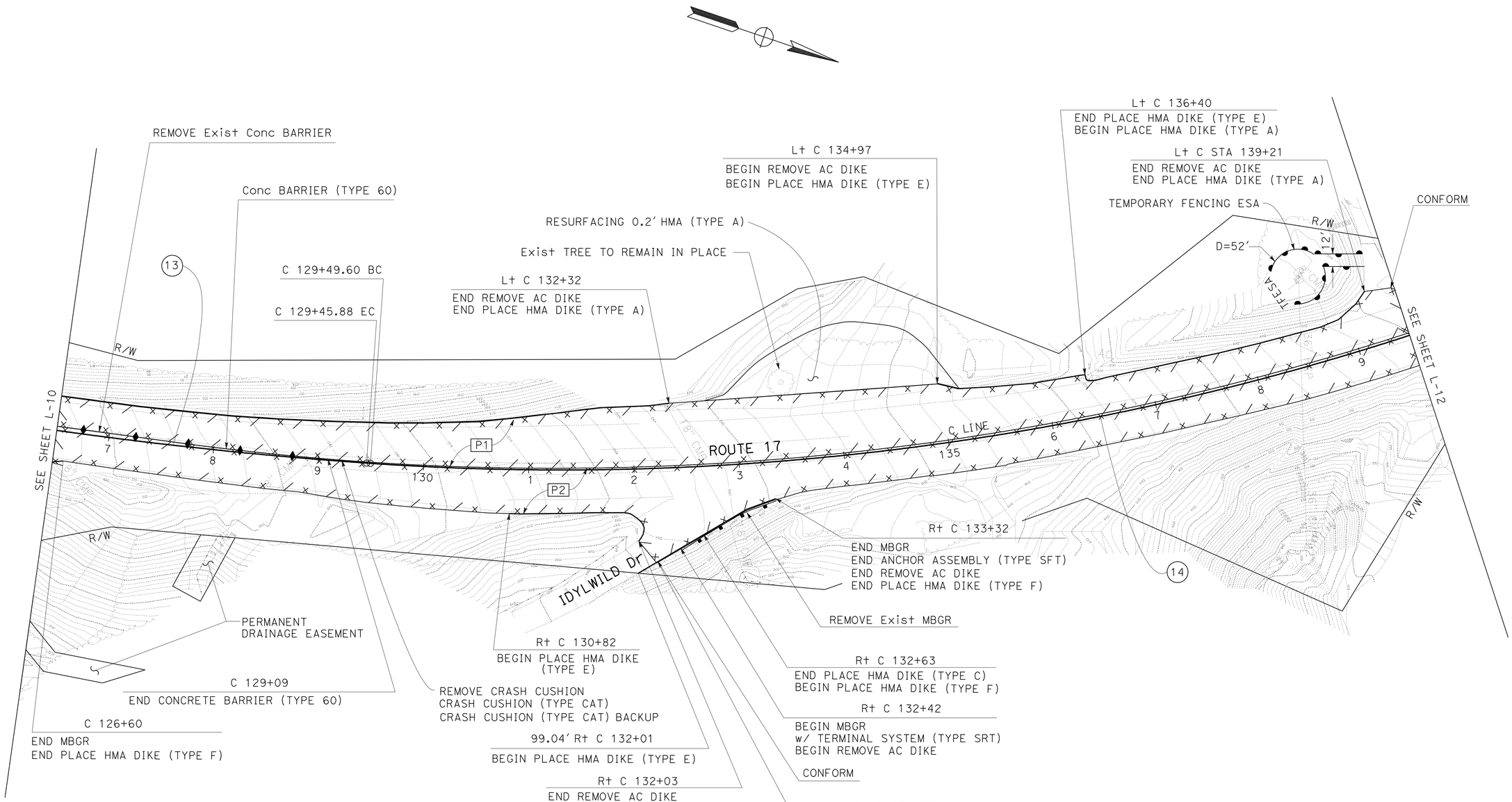

FOR NOTES, ABBREVIATIONS AND LEGEND, SEE SHEET L-1

2 **ADDED PER ADDENDUM No. 2 DATED FEBRUARY 28, 2011**

LAYOUT
SCALE: 1" = 50′

L-11

STATE OF CALIFORNIA - DEPARTMENT OF TRANSPORTATION
Caltrans
DESIGN
FUNCTIONAL SUPERVISOR: SHAWN ENJILY
CALCULATED-DESIGNED BY: JAMES CHUANG
CHECKED BY: GIANG KHUU
REVISED BY: 3/15/10
DATE REVISED: 3/15/10

LAST REVISION 03-02-10 | DATE PLOTTED => 23-FEB-2011 | TIME PLOTTED => 10:46

Dist	COUNTY	ROUTE	POST MILES TOTAL PROJECT	SHEET No.	TOTAL SHEETS
04	SCI	17	0.0/2.8	13E	278

REGISTERED CIVIL ENGINEER 3-24-10 DATE

9-7-10
PLANS APPROVAL DATE

REGISTERED PROFESSIONAL ENGINEER James Chuang No. 74690 Exp. 12-31-11 CIVIL STATE OF CALIFORNIA

THE STATE OF CALIFORNIA OR ITS OFFICERS OR AGENTS SHALL NOT BE RESPONSIBLE FOR THE ACCURACY OR COMPLETENESS OF SCANNED COPIES OF THIS PLAN SHEET.

2

FOR ACCURATE RIGHT OF WAY AND ACCESS DATA, CONTACT RIGHT OF WAY ENGINEERING AT THE DISTRICT OFFICE.

CURVE DATA

No.	R	Δ	T	L	N-COORDINATE	E-COORDINATE
14	2599.99′	34°31′33″	807.96″	1566.73′	1886904.91	6125218.13

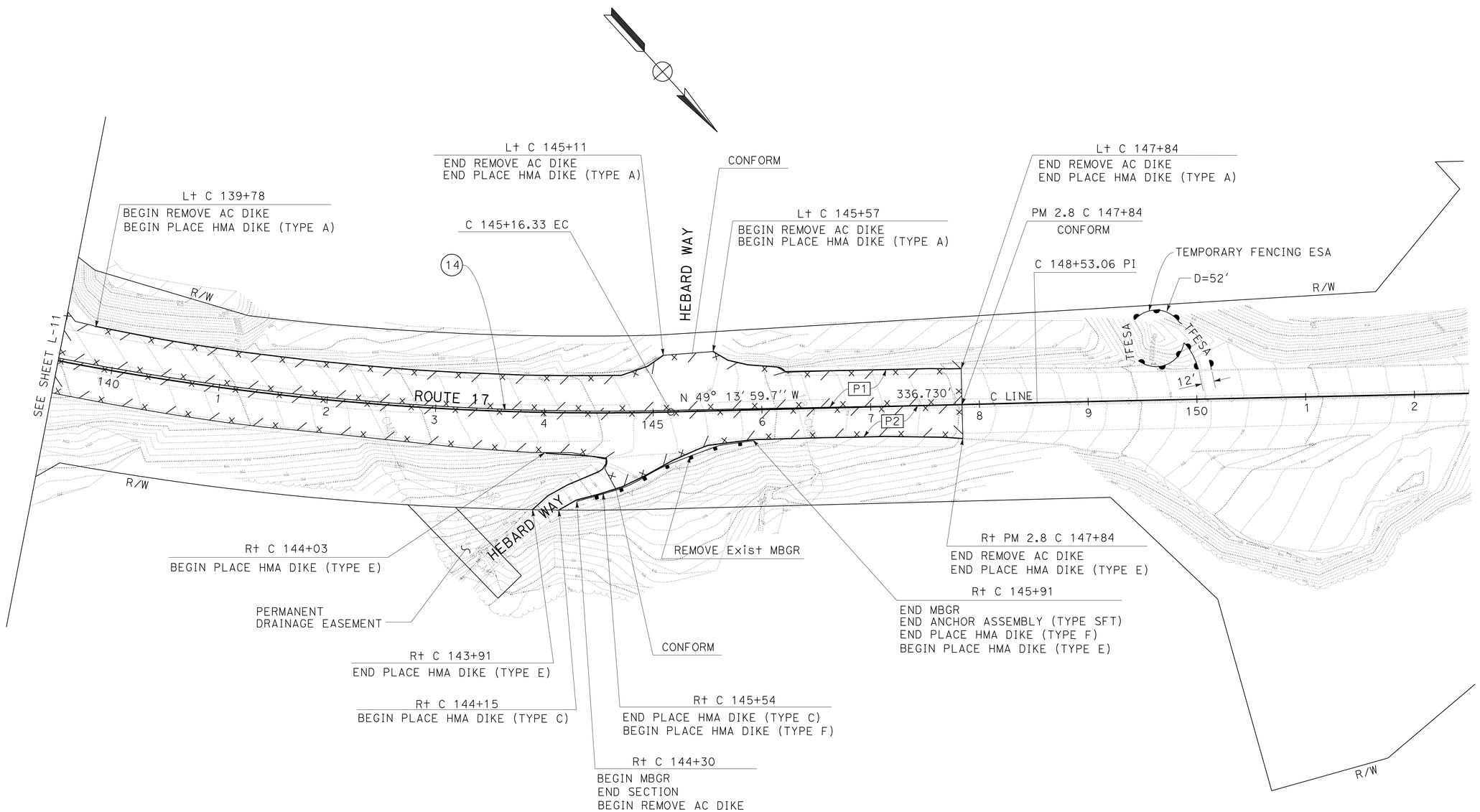

FOR NOTES, ABBREVIATIONS AND LEGEND, SEE SHEET L-1

2 **ADDED PER ADDENDUM No. 2 DATED FEBRUARY 28, 2011**

LAYOUT
SCALE: 1" = 50′

L-12

REVISED BY	DATE REVISED
GIANG KHUU	3/15/10

CALCULATED-DESIGNED BY	CHECKED BY
JAMES CHUANG	3/15/10

FUNCTIONAL SUPERVISOR: SHAWN ENJILY

STATE OF CALIFORNIA - DEPARTMENT OF TRANSPORTATION
Caltrans®
DESIGN

LAST REVISION 03-02-10 | DATE PLOTTED => 23-FEB-2011 | TIME PLOTTED => 10:46

Dist	COUNTY	ROUTE	POST MILES TOTAL PROJECT	SHEET No.	TOTAL SHEETS
04	SCI	17	0.0/2.8	93	278

REGISTERED CIVIL ENGINEER 06/09/2010 DATE

9-7-10
PLANS APPROVAL DATE

REGISTERED PROFESSIONAL ENGINEER CHRISTOPHER SEWELL No. C 64807 Exp. 6/30/11 CIVIL STATE OF CALIFORNIA

THE STATE OF CALIFORNIA OR ITS OFFICERS OR AGENTS SHALL NOT BE RESPONSIBLE FOR THE ACCURACY OR COMPLETENESS OF SCANNED COPIES OF THIS PLAN SHEET.

WRECO
1243 ALPINE ROAD
SUITE 108
WALNUT CREEK, CA 94596

CALTRANS
111 GRAND AVENUE
OAKLAND, CA 94612

NOTE:
SEE SHEET DD-11 FOR SECTIONS C-C AND E-E.

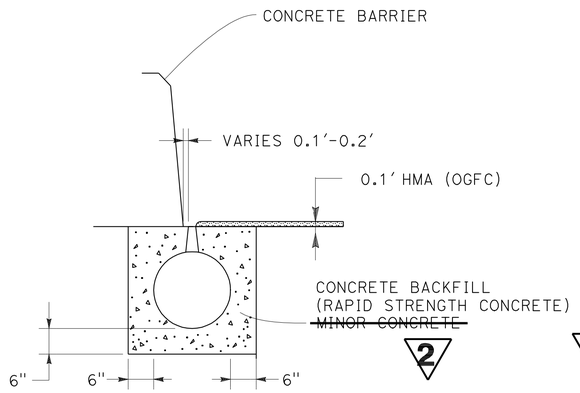

SLOTTED PIPE PLACEMENT & BACKFILL

SECTION B-B

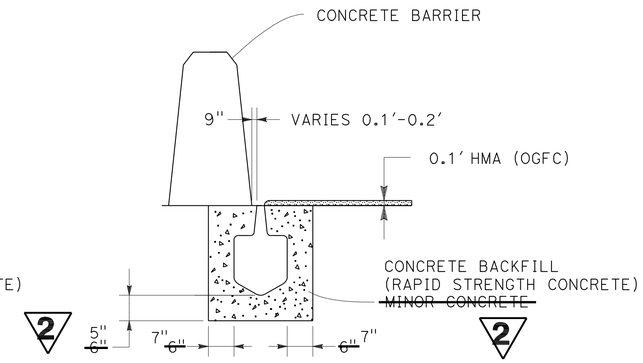

SLOTTED PLASTIC PIPE PLACEMENT & BACKFILL

SECTION F-F

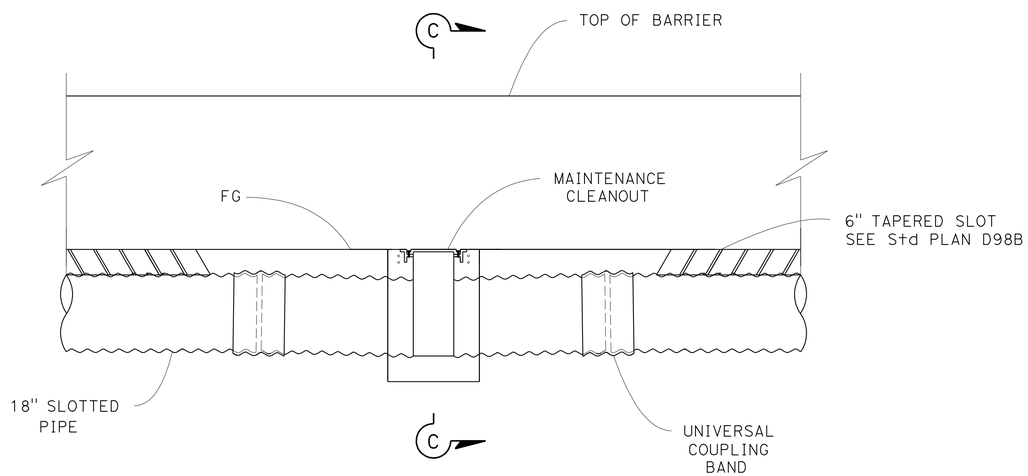

SECTION A-A

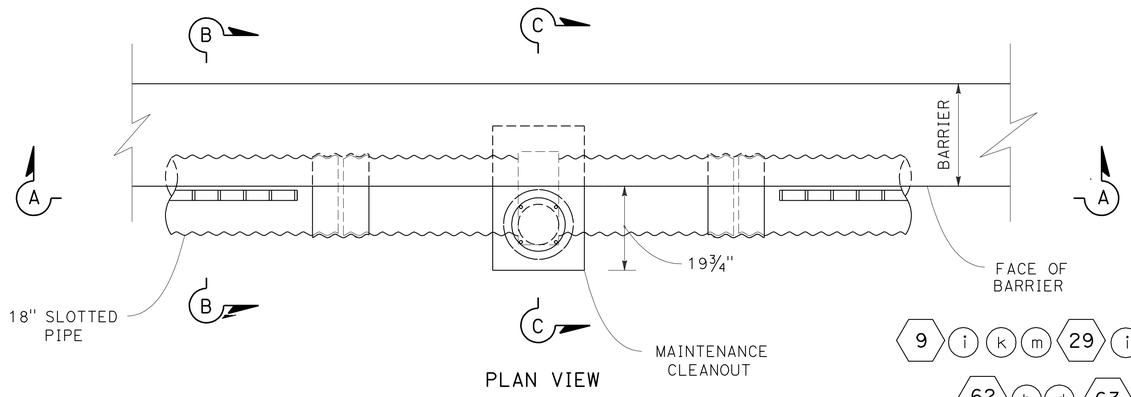

PLAN VIEW

SLOTTED CORRUGATED STEEL PIPE ALTERNATIVE

FOR DETAILS NOT SHOWN, SEE STD PLANS D98A AND D98B

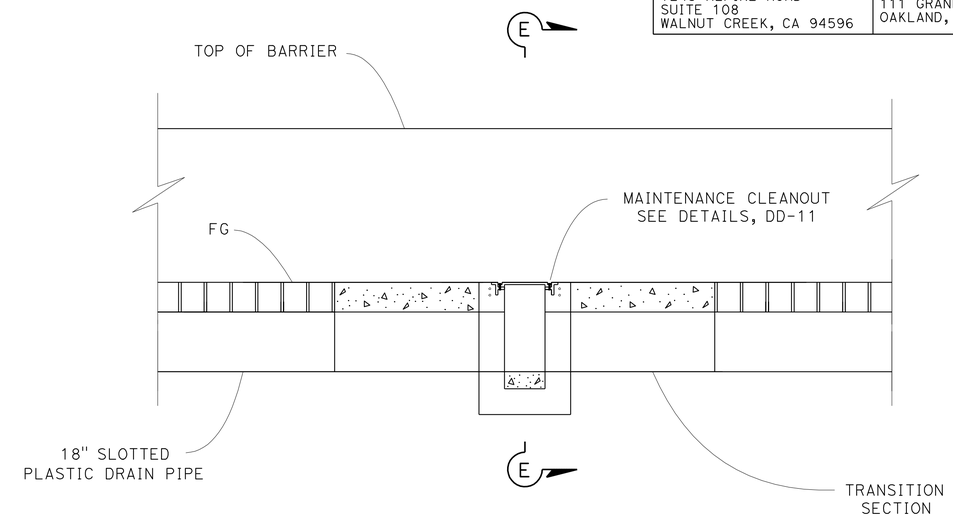

SECTION D-D

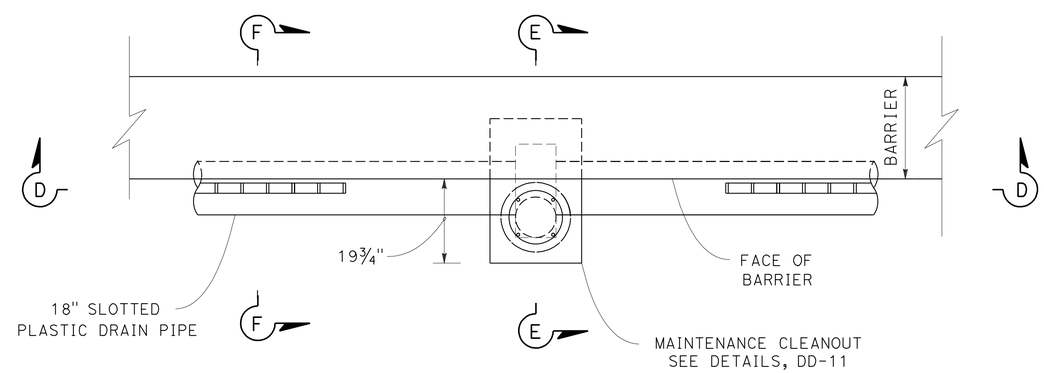

PLAN VIEW - SLOTTED PLASTIC PIPE ALTERNATIVE

FOR DETAILS NOT SHOWN, SEE STD PLAN D98D

9 (i k m) 29 (j k) 31 (a c) 35 (a c) 46 (b d f h z bb) 48 (a) 55 (b d f)
62 (b d) 63 (b d f) 67 (a c) 68 (b d) 71 (a k m o)
77 (b) 79 (b d f) 85 (b d) 90 (b)

ALL DIMENSIONS ARE IN
FEET UNLESS OTHERWISE SHOWN

DRAINAGE DETAILS

NO SCALE

2 **REVISED PER ADDENDUM No. 2 DATED FEBRUARY 28, 2011**

DD-10

REVISED BY	DATE REVISED
J.ABRAMS	06/09/10

JENNIFER ABRAMS — CHRIS SEWELL — CALCULATED-DESIGNED BY — CHECKED BY

CONSULTANT FUNCTIONAL SUPERVISOR: HAN-BIN LIANG

STATE OF CALIFORNIA - DEPARTMENT OF TRANSPORTATION — Caltrans

LAST REVISION 06-09-10 | DATE PLOTTED => 23-FEB-2011 | TIME PLOTTED => 12:47

Dist	COUNTY	ROUTE	POST MILES TOTAL PROJECT	SHEET No.	TOTAL SHEETS
04	SCI	17	0.0/2.8	100	278

REGISTERED CIVIL ENGINEER 06/09/2010 DATE

9-7-10
PLANS APPROVAL DATE

REGISTERED PROFESSIONAL ENGINEER CHRISTOPHER SEWELL No. C 64807 Exp. 6/30/11 CIVIL STATE OF CALIFORNIA

THE STATE OF CALIFORNIA OR ITS OFFICERS OR AGENTS SHALL NOT BE RESPONSIBLE FOR THE ACCURACY OR COMPLETENESS OF SCANNED COPIES OF THIS PLAN SHEET.

WRECO
1243 ALPINE ROAD
SUITE 108
WALNUT CREEK, CA 94596

CALTRANS
111 GRAND AVENUE
OAKLAND, CA 94612

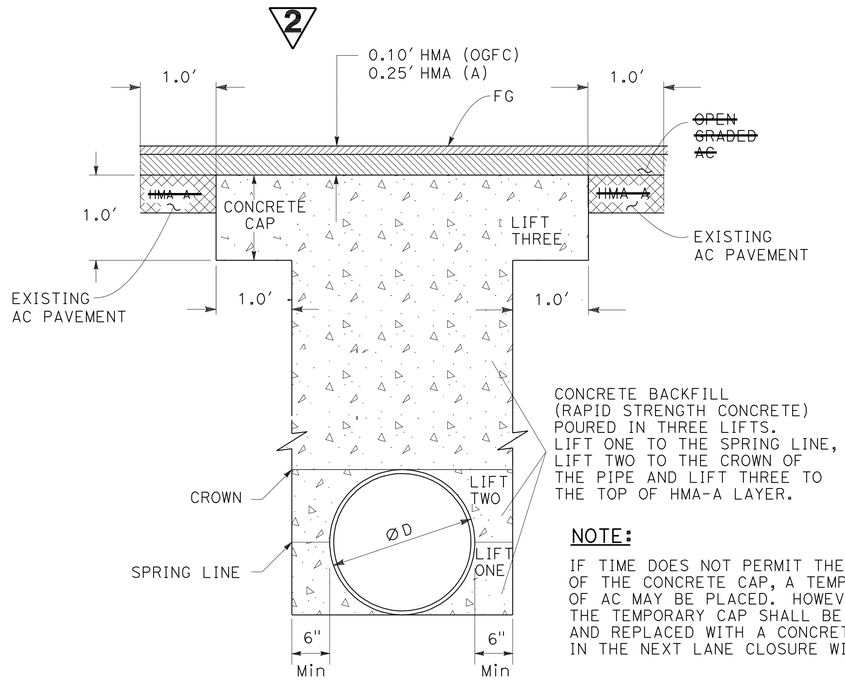

NOTE:

IF TIME DOES NOT PERMIT THE PLACEMENT OF THE CONCRETE CAP, A TEMPORARY CAP OF AC MAY BE PLACED. HOWEVER, THE TEMPORARY CAP SHALL BE REMOVED AND REPLACED WITH A CONCRETE CAP IN THE NEXT LANE CLOSURE WINDOW.

CONCRETE BACKFILL (RAPID STRENGTH CONCRETE)

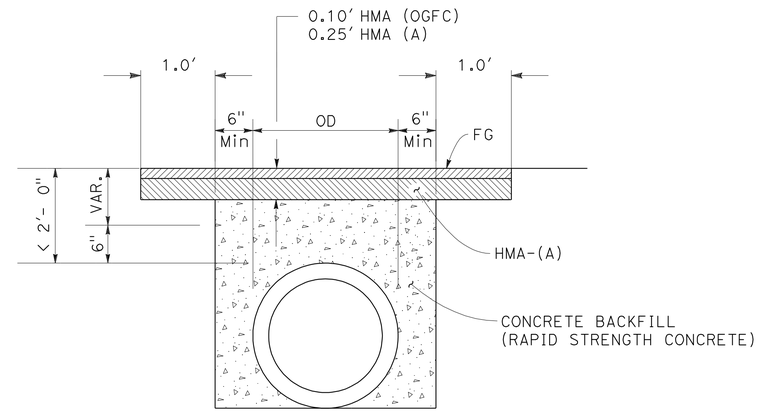

CONCRETE BACKFILL (RAPID STRENGTH CONCRETE)

PIPES WITH LESS THAN 2' COVER

3 i

CONCRETE BACKFILL (RAPID STRENGTH CONCRETE)

3 b d m o 22 b d f k 29 b d 31 e g 35 e 45 b 46 i k m o dd

48 c 55 h j 62 g i k l n p r w y aa 63 h 67 e g h

68 f j 71 c h j 74 b 77 d h 79 h j l n p r t v x

85 f 90 d f h m o 92 b 98 d 100 b e

2 **REVISED PER ADDENDUM No. 2 DATED FEBRUARY 28, 2011**

ALL DIMENSIONS ARE IN FEET UNLESS OTHERWISE SHOWN

DRAINAGE DETAILS

NO SCALE

DD-17

J. TUDD	02/03/11
J.ABRAMS	06/09/10
REVISED BY	DATE REVISED
JENNIFER ABRAMS	CHRIS SEWELL
CALCULATED-DESIGNED BY	CHECKED BY
CONSULTANT FUNCTIONAL SUPERVISOR	HAN-BIN LIANG

STATE OF CALIFORNIA - DEPARTMENT OF TRANSPORTATION

Caltrans

LAST REVISION 06-09-10 | DATE PLOTTED => 23-FEB-2011 | TIME PLOTTED => 11:27

Dist	COUNTY	ROUTE	POST MILES TOTAL PROJECT	SHEET No.	TOTAL SHEETS
04	SCI	17	0.0/2.8	102	278

REGISTERED CIVIL ENGINEER 06/09/2010 DATE

9-7-10
PLANS APPROVAL DATE

REGISTERED PROFESSIONAL ENGINEER CHRISTOPHER SEWELL No. C 64807 Exp. 6/30/11 CIVIL STATE OF CALIFORNIA

THE STATE OF CALIFORNIA OR ITS OFFICERS OR AGENTS SHALL NOT BE RESPONSIBLE FOR THE ACCURACY OR COMPLETENESS OF SCANNED COPIES OF THIS PLAN SHEET.

WRECO
1243 ALPINE ROAD
SUITE 108
WALNUT CREEK, CA 94596

CALTRANS
111 GRAND AVENUE
OAKLAND, CA 94612

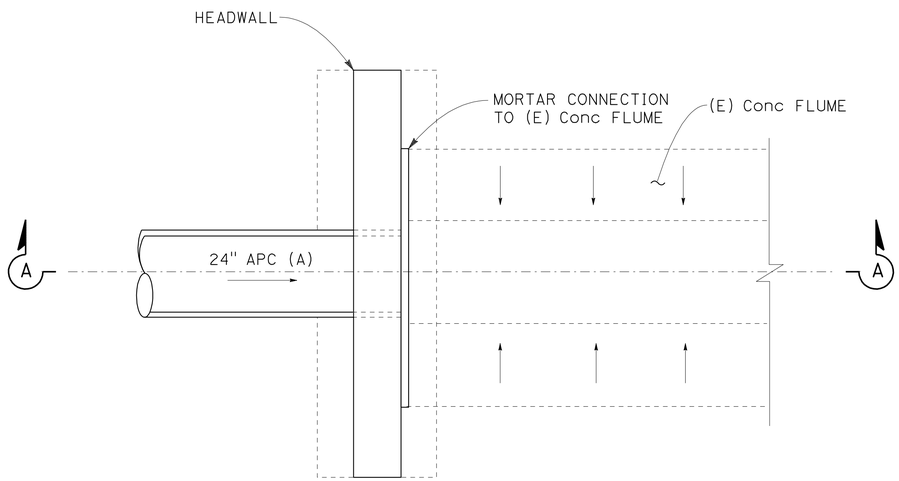

PLAN

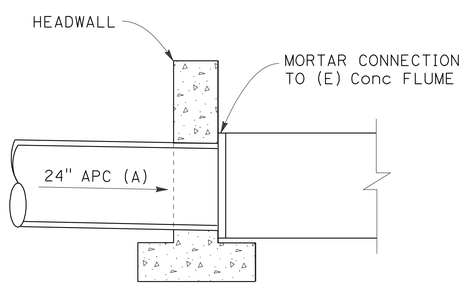

SECTION A-A

HEADWALL CONNECTION TO CONCRETE FLUME

46 ×

2

ALTERNATIVE PIPELINER METHOD	HOST PIPE DIAMETER			
	18-INCH	24-INCH	30-INCH	36-INCH
PVC SDR 35	14.0"	20.5"	26.0"	33.0"
PVC CLOSED PROFILE WALL	14.4"	20.5"	26.0"	32.0"
HPDE SOLID WALL	14.0"	19.7"	25.0"	30.7"
SPIRAL WOUND PVC PIPELINER (FIXED DIAMETER)	N/A	21.0"	27.0"	33.0"
MACHINE SPIRAL WOUND PVC PIPELINER (EXPANDABLE DIAMETER)	16.0"	22.0"	28.0"	N/A

ALTERNATIVE PIPELINER - MINIMUM INTERNAL DIAMETER TABLE

2 **REVISED PER ADDENDUM No. 2 DATED FEBRUARY 28, 2011**

ALL DIMENSIONS ARE IN FEET UNLESS OTHERWISE SHOWN

DRAINAGE DETAILS

NO SCALE

DD-19

REVISED BY	DATE REVISED
J.ABRAMS	06/09/10
H. YU	02/07/11

CALCULATED-DESIGNED BY: JENNIFER ABRAMS
CHECKED BY: CHRIS SEWELL
CONSULTANT FUNCTIONAL SUPERVISOR: HAN-BIN LIANG

STATE OF CALIFORNIA - DEPARTMENT OF TRANSPORTATION
Caltrans

LAST REVISION 06-09-10
DATE PLOTTED => 23-FEB-2011
TIME PLOTTED => 11:27

APC ALLOWABLE PIPE MATERIAL AND PROTECTION

DESCRIPTION	RCP SIZE	CSP OR SSRP				PLASTIC
		SIZE	THICKNESS	THICKNESS w/ BC	THICKNESS w/ PSC	
12" APC (A)	12"	12"	0.079"	0.064"	0.052"	12"
18" APC (A)	18"	18"	0.079"	0.064"	0.052"	18"
18" APC (B)	18"	-	-	-	-	18"
24" APC (A)	24"	24"	0.079"	0.064"	0.052"	24"
24" APC (B)	24"	-	-	-	-	24"
30" APC (A)	30"	30"	0.079"	0.064"	0.052"	30"
30" APC (B)	30"	-	-	-	-	30"

NOTES:

2

1. BITUMINOUS COATING IS ON SOIL SIDE ONLY.
2. ALUMINUM AND ALUMINIZED STEEL PIPE NOT ALLOWED BECAUSE OF ABRASION POTENTIAL.
3. PLASTIC PIPE SHALL HAVE A SMOOTH INNER WALL.
4. THE NUMBER OF ANCHOR ASSEMBLIES PER DOWNDRAIN SYSTEM REFLECTS TWO ANCHORS AT THE TERMINAL TEE DISSIPATOR AND THE REST EQUALLY SPACED ALONG THE LENGTH OF THE PIPE.
5. FOR ALLOWABLE ALTERNATIVE PIPELINER TYPES AND SIZES, SEE SHEET DD-19.

ABBREVIATIONS:

BC- BITUMINOUS COATING
DD- DOWNDRAIN JOINT TYPE
PJ- POSITIVE JOINT TYPE
PSC- POLYMERIC SHEET COATING
SJ- STANDARD JOINT TYPE
(N)- NOT SEPARATE PAY ITEM, FOR INFORMATION ONLY.

Dist	COUNTY	ROUTE	POST MILES TOTAL PROJECT	SHEET No.	TOTAL SHEETS
04	SCI	17	0.0/2.8	105	278

REGISTERED CIVIL ENGINEER 06/09/2010 DATE

9-7-10
PLANS APPROVAL DATE

REGISTERED PROFESSIONAL ENGINEER CHRISTOPHER SEWELL No. C 64807 Exp. 6/30/11 CIVIL STATE OF CALIFORNIA

THE STATE OF CALIFORNIA OR ITS OFFICERS OR AGENTS SHALL NOT BE RESPONSIBLE FOR THE ACCURACY OR COMPLETENESS OF SCANNED COPIES OF THIS PLAN SHEET.

WRECO
1243 ALPINE ROAD
SUITE 108
WALNUT CREEK, CA 94596

CALTRANS
111 GRAND AVENUE
OAKLAND, CA 94612

DRAINAGE QUANTITIES

DRAINAGE SYSTEM No.	DRAINAGE UNIT	REMOVE INLET	REMOVE MANHOLE	REMOVE CULVERT	REMOVE DD	REMOVE CONCRETE	REMOVE HEADWALL	ABANDON CULVERT	SAND BACKFILL	ALTERNATIVE PIPE CULVERT 12" (TYPE A)	18" (TYPE A)	18" (TYPE B)	24" (TYPE A)	24" (TYPE B)	30" (TYPE A)	30" (TYPE B)	CSP DD 12"	18"	24"	30"	36"	JACK 24" RCP	CSP 42"	48"	18" ASP	ALTERNATIVE PIPELINER 18"	24"	30"	36"	REHAB RISER METHOD A	METHOD B	METHOD C	DESCRIPTION	STATION	DRAINAGE PLAN No.	DRAINAGE SYSTEM No.	DRAINAGE UNIT
		EA	EA	FT	FT	CY	EA	LF	CY	FT	FT	FT	FT	FT	FT	FT	FT	FT	FT	FT	FT	FT	FT	FT	FT	FT	FT	FT	FT	FT	FT	FT					
1	a																									142							18" APL	273.24 Rt C 4+11 to 216.10 Rt C 4+94	D-1	1	a
	b																																18" CSP FES	216.10 Rt C 4+94			b
	c																																RSP	216.10 Rt C 4+94			c
2	a	1																															REMOVE DI	69.00 Rt C 3+56	D-1	2	a
	b			37																													REMOVE Culv	69.00 Rt C 3+56 to 47.87 Rt C 3+89			b
	c		1																														REMOVE MH	47.87 Rt C 3+89			c
	d			40																													REMOVE Culv	47.87 Rt C 3+89 to 39.43 Rt C 4+28			d
	e		1																														REMOVE MH	39.43 Rt C 4+28			e
	f			5																													REMOVE Culv	39.43 Rt C 4+28 to 47.58 Rt C 4+30			f
	g	1																															REMOVE DI	49.58 Rt C 4+30			g
	h			238																													REMOVE Culv	39.43 Rt C 4+28 to 59.90 Rt C 6+50			h
	i	1																															REMOVE DI	59.90 Rt C 6+50			i
	j			24																													REMOVE Culv	59.90 Rt C 6+50 to 81.70 Rt C 6+56			j
	k	1																															REMOVE DI	50.02 Lt C 5+98			k
	l			56																													REMOVE Culv	50.02 Lt C 5+98 to 45.52 Lt C 6+63			l
	m							128	8.38																								ABANDON Culv	45.52 Lt C 6+63 to 81.70 Rt C 6+56			m
	n	1																															REMOVE DI	52.68 Lt C 3+07			n
	o			141																													REMOVE Culv	52.68 Lt C 3+07 to 71.65 Lt C 4+71			o
3	a																																GO DI	69.00 Rt C 3+56	D-1	3	a
	b										83																						18" APC (A) w/ Conc Bkf	69.00 Rt C 3+56 to 49.58 Rt C 4+30			b
	c																																GO DI	49.58 Rt C 4+30			c
	d										238																						18" APC (A) w/ Conc Bkf	49.58 Rt C 4+30 to 59.90 Rt C 6+50			d
	e																																G2 DI	59.90 Rt C 6+50			e
	f													46																			24" APC (B)	59.90 Rt C 6+50 to 106.05 Rt C 6+56			f
	g																																24" CSP FES	106.05 Rt C 6+56			g
	h																																RSP	106.05 Rt C 6+56			h
	i											56																					18" APC (B) w/ Conc Bkf	50.02 Lt C 5+98 to 45.52 Lt C 6+63			i
	j																																GO DI	50.02 Lt C 5+98			j
		5	2	541				128	8.38		321	56		46												142							SHEET TOTAL				

DRAINAGE QUANTITIES

2 REVISED PER ADDENDUM No. 2 DATED FEBRUARY 28, 2011

DQ-1

STATE OF CALIFORNIA - DEPARTMENT OF TRANSPORTATION
Caltrans

CONSULTANT FUNCTIONAL SUPERVISOR: HAN-BIN LIANG
CALCULATED-DESIGNED BY: JENNIFER ABRAMS
CHECKED BY: CHRIS SEWELL
REVISED BY: J.ABRAMS
DATE REVISED: 06/09/10

LAST REVISION DATE PLOTTED => 23-FEB-2011
06-09-10 TIME PLOTTED => 17:17

Dist	COUNTY	ROUTE	POST MILES TOTAL PROJECT	SHEET No.	TOTAL SHEETS
04	SCI	17	0.0/2.8	106	278

REGISTERED CIVIL ENGINEER 06/09/2010 DATE

9-7-10
PLANS APPROVAL DATE

REGISTERED PROFESSIONAL ENGINEER CHRISTOPHER SEWELL No. C 64807 Exp. 6/30/11 CIVIL STATE OF CALIFORNIA

THE STATE OF CALIFORNIA OR ITS OFFICERS OR AGENTS SHALL NOT BE RESPONSIBLE FOR THE ACCURACY OR COMPLETENESS OF SCANNED COPIES OF THIS PLAN SHEET.

WRECO
1243 ALPINE ROAD
SUITE 108
WALNUT CREEK, CA 94596

CALTRANS
111 GRAND AVENUE
OAKLAND, CA 94612

DRAINAGE QUANTITIES

DRAINAGE SYSTEM No. ⬡	DRAINAGE UNIT ◯	CSP FES 12"	CSP FES 18"	CSP FES 24"	CSP FES 30"	CSP FES 36"	48" WSP	MINOR Conc: MINOR STRUCTURE	MINOR Conc: Misc CONSTRUCTION	Conc BACKFILL (RAPID STRENGTH Conc)	Misc IRON AND STEEL	PIPE ANCHOR ASSEMBLY	ROCK SLOPE PROTECTION (BACKING No. 3, METHOD B)	ROCK SLOPE PROTECTION (BACKING No. 2, METHOD B)	ROCK SLOPE PROTECTION (FACING, METHOD B)	ROCK SLOPE PROTECTION (LIGHT, METHOD B)	ROCK SLOPE PROTECTION FABRIC	CULVERT CONTACT GROUTING	CONTACT GROUT PORTS	CHECKERED PLATE (N)	BOLTDOWN COVER (N)	24" TO 18" ECCENTRIC REDUCER Conc COLLAR	FRAME & COVER OR FRAME & GRATE (N): G2 MH	FRAME & COVER OR FRAME & GRATE (N): Maint CLEANOUT (17½" Dia)	FRAME & COVER OR FRAME & GRATE (N): TYPE 24-12X	FRAME & COVER OR FRAME & GRATE (N): OS PLATE	PIPE JOINT CLASSIFICATION (N)	MAXIMUM COVER (N)	HEIGHT OF DI/MH (N)	DESCRIPTION	STATION	DRAINAGE PLAN No.	DRAINAGE SYSTEM No. ⬡	DRAINAGE UNIT ◯
		EA	EA	EA	EA	EA	FT	CY	CY	CY	LB	EA	CY	CY	CY	CY	SQYD	CY	EA	EA	EA	EA	EA	EA	EA	EA		LF	LF					
1	a																	1.81	~~92~~											18" APL	273.24 Rt C 4+11 to 216.10 Rt C 4+94	D-1	1	a
	b		1																											18" CSP FES	216.10 Rt C 4+94			b
	c													1.96			9.6													RSP	216.10 Rt C 4+94			c
2	a																													REMOVE DI	69.00 Rt C 3+56	D-1	2	a
	b																													REMOVE Culv	69.00 Rt C 3+56 to 47.87 Rt C 3+89			b
	c																													REMOVE MH	47.87 Rt C 3+89			c
	d																													REMOVE Culv	47.87 Rt C 3+89 to 39.43 Rt C 4+28			d
	e																													REMOVE MH	39.43 Rt C 4+28			e
	f																													REMOVE Culv	39.43 Rt C 4+28 to 47.58 Rt C 4+30			f
	g																													REMOVE DI	49.58 Rt C 4+30			g
	h																													REMOVE Culv	39.43 Rt C 4+28 to 59.90 Rt C 6+50			h
	i																													REMOVE DI	59.90 Rt C 6+50			i
	j																													REMOVE Culv	59.90 Rt C 6+50 to 81.70 Rt C 6+56			j
	k																													REMOVE DI	50.02 Lt C 5+98			k
	l																													REMOVE Culv	50.02 Lt C 5+98 to 45.52 Lt C 6+63			l
	m																													ABANDON Culv	45.52 Lt C 6+63 to 81.70 Rt C 6+56			m
	n																													REMOVE DI	52.68 Lt C 3+07			n
	o																													REMOVE Culv	52.68 Lt C 3+07 to 71.65 Lt C 4+71			o
3	a							1.36			239														1			3.5		GO DI	69.00 Rt C 3+56	D-1	3	a
	b								31																	SJ	2.00			18" APC (A) w/ Conc Bkf	69.00 Rt C 3+56 to 49.58 Rt C 4+30			b
	c							1.39			239														1			3.6		GO DI	49.58 Rt C 4+30			c
	d								105																	PJ	3.50			18" APC (A) w/ Conc Bkf	49.58 Rt C 4+30 to 59.90 Rt C 6+50			d
	e							4.68			239														1			11.3		G2 DI	59.90 Rt C 6+50			e
	f																									SJ	10.20			24" APC (B)	59.90 Rt C 6+50 to 106.05 Rt C 6+56			f
	g			1																										24" CSP FES	106.05 Rt C 6+56			g
	h												3.48			14.7														RSP	106.05 Rt C 6+56			h
	i								26																	SJ	4.70			18" APC (B) w/ Conc Bkf	50.02 Lt C 5+98 to 45.52 Lt C 6+63			i
	j							2.05			239														1			6.3		GO DI	50.02 Lt C 5+98			j
			1	1				9.48		162	956			5.44			24.3	1.81	~~92~~						4					SHEET TOTAL				

2

2 REVISED PER ADDENDUM No. 2 DATED FEBRUARY 28, 2011

DRAINAGE QUANTITIES

DQ-2

STATE OF CALIFORNIA - DEPARTMENT OF TRANSPORTATION
Caltrans

CONSULTANT FUNCTIONAL SUPERVISOR: HAN-BIN LIANG
CALCULATED-DESIGNED BY: JENNIFER ABRAMS
CHECKED BY: CHRIS SEWELL
REVISED BY: J.ABRAMS
DATE REVISED: 06/09/10

LAST REVISION 06-09-10
DATE PLOTTED => 23-FEB-2011
TIME PLOTTED => 10:47

Dist	COUNTY	ROUTE	POST MILES TOTAL PROJECT	SHEET No.	TOTAL SHEETS
04	SCI	17	0.0/2.8	107	278

REGISTERED CIVIL ENGINEER 06/09/2010 DATE

9-7-10
PLANS APPROVAL DATE

REGISTERED PROFESSIONAL ENGINEER CHRISTOPHER SEWELL No. C 64807 Exp. 6/30/11 CIVIL STATE OF CALIFORNIA

THE STATE OF CALIFORNIA OR ITS OFFICERS OR AGENTS SHALL NOT BE RESPONSIBLE FOR THE ACCURACY OR COMPLETENESS OF SCANNED COPIES OF THIS PLAN SHEET.

WRECO
1243 ALPINE ROAD
SUITE 108
WALNUT CREEK, CA 94596

CALTRANS
111 GRAND AVENUE
OAKLAND, CA 94612

DRAINAGE QUANTITIES

DRAINAGE SYSTEM No.	DRAINAGE UNIT	REMOVE INLET	REMOVE MANHOLE	REMOVE CULVERT	REMOVE DD	REMOVE CONCRETE	REMOVE HEADWALL	ABANDON CULVERT	SAND BACKFILL	ALTERNATIVE PIPE CULVERT 12" (TYPE A)	18" (TYPE A)	18" (TYPE B)	24" (TYPE A)	24" (TYPE B)	30" (TYPE A)	30" (TYPE B)	CSP DD 12"	18"	24"	30"	36"	JACK 24" RCP	CSP 42"	48"	18" ASP	ALTERNATIVE PIPELINER 18"	24"	30"	36"	REHAB RISER METHOD A	METHOD B	METHOD C	DESCRIPTION	STATION	DRAINAGE PLAN No.	DRAINAGE SYSTEM No.	DRAINAGE UNIT
		EA	EA	FT	FT	CY	EA	LF	CY	FT	FT	FT	FT	FT	FT	FT	FT	FT	FT	FT	FT	FT	FT	FT	FT	FT	FT	FT	FT	FT	FT	FT					
3	k																					119											JACK 24" RCP	50.02 Lt C 5+98 to 59.90 Rt C 6+50		3	k
	l																																GO DI	52.68 Lt C 3+07			l
	m										141																						18" APC (A) w/ Conc Bkf	52.68 Lt C 3+07 to 71.65 Lt C 4+71			m
	n																																G2 MH w/ BOLTDOWN COVER	71.65 Lt C 4+71			n
	o										112																						18" APC (A) w/ Conc Bkf	71.65 Lt C 4+71 to 50.02 Lt C 5+98			o
4	a			21																													REMOVE Culv	42.07 Rt C 7+22 to 62.10 Rt C 7+31	D-1	4	a
5	a																																G2 DI	42.07 Rt C 7+22	D-1	5	a
	b									21																							12" APC (A)	42.07 Rt C 7+22 to 62.10 Rt C 7+31			b
	c																																12" CSP FES	62.10 Rt C 7+31			c
6	a	1																															REMOVE DI	297.56 Lt C 7+77	D-1	6	a
	b			86																													REMOVE Culv	297.56 Lt C 7+77 to 215.50 Lt C 8+31			b
7	a																																OS DI w/ 1 SIDE OPENING	297.56 Lt C 7+77	D-1	7	a
	b										86																						18" APC (A)	297.56 Lt C 7+77 to 215.50 Lt C 8+31			b
	c																																18" CSP FES	215.50 Lt C 8+31			c
	d																																RSP	215.50 Lt C 8+31			d
8	a			72																													REMOVE Culv	96.50 Lt C 9+68 to 38.36 Lt C 9+70	D-1	8	a
9	a																																DEBRIS RACK	96.50 Lt C 9+68	D-1	9	a
	b																77																12" CSP DD	96.50 Lt C 9+68 to 38.36 Lt C 9+70			b
	c																									46							18" APL	38.36 Lt C 9+70 to 0.99 Rt C 9+97			c
	d																																G2 MH w/ BOLTDOWN COVER	0.99 Rt C 9+97			d
	e																									48							18" APL	0.99 Rt C 9+97 to 40.42 Rt C 10+25			e
	f																																18" CSP FES	40.42 Rt C 10+25			f
		1		179						21	339						77					119				94							SHEET TOTAL				

2

DRAINAGE QUANTITIES

2 REVISED PER ADDENDUM No. 2 DATED FEBRUARY 28, 2011

DQ-3

STATE OF CALIFORNIA - DEPARTMENT OF TRANSPORTATION
Caltrans

CONSULTANT FUNCTIONAL SUPERVISOR: HAN-BIN LIANG
CALCULATED-DESIGNED BY: JENNIFER ABRAMS
CHECKED BY: CHRIS SEWELL
REVISED BY: J.ABRAMS
DATE REVISED: 06/09/10

LAST REVISION 06-09-10
DATE PLOTTED => 23-FEB-2011
TIME PLOTTED => 17:15

Dist	COUNTY	ROUTE	POST MILES TOTAL PROJECT	SHEET No.	TOTAL SHEETS
04	SCI	17	0.0/2.8	108	278

REGISTERED CIVIL ENGINEER 06/09/2010 DATE

9-7-10
PLANS APPROVAL DATE

REGISTERED PROFESSIONAL ENGINEER CHRISTOPHER SEWELL No. C 64807 Exp. 6/30/11 CIVIL STATE OF CALIFORNIA

THE STATE OF CALIFORNIA OR ITS OFFICERS OR AGENTS SHALL NOT BE RESPONSIBLE FOR THE ACCURACY OR COMPLETENESS OF SCANNED COPIES OF THIS PLAN SHEET.

WRECO
1243 ALPINE ROAD
SUITE 108
WALNUT CREEK, CA 94596

CALTRANS
111 GRAND AVENUE
OAKLAND, CA 94612

DRAINAGE QUANTITIES

DRAINAGE SYSTEM No. ⬡	DRAINAGE UNIT ◯	CSP FES 12" EA	CSP FES 18" EA	CSP FES 24" EA	CSP FES 30" EA	CSP FES 36" EA	48" WSP FT	MINOR Conc: MINOR STRUCTURE CY	MINOR Conc: Misc CONSTRUCTION CY	Conc BACKFILL (RAPID STRENGTH Conc) CY	Misc IRON AND STEEL LB	PIPE ANCHOR ASSEMBLY EA	ROCK SLOPE PROTECTION (BACKING No. 3, METHOD B) CY	ROCK SLOPE PROTECTION (BACKING No. 2, METHOD B) CY	ROCK SLOPE PROTECTION (FACING, METHOD B) CY	ROCK SLOPE PROTECTION (LIGHT, METHOD B) CY	ROCK SLOPE PROTECTION FABRIC SQYD	CULVERT CONTACT GROUTING CY	~~CONTACT GROUT PORTS EA~~	CHECKERED PLATE (N) EA	BOLTDOWN COVER (N) EA	24" TO 18" ECCENTRIC REDUCER Conc COLLAR EA	FRAME & COVER OR FRAME & GRATE (N): G2 MH EA	FRAME & COVER OR FRAME & GRATE (N): Maint CLEANOUT (17½" Dia) EA	FRAME & COVER OR FRAME & GRATE (N): TYPE 24-12X EA	FRAME & COVER OR FRAME & GRATE (N): OS PLATE EA	PIPE JOINT CLASSIFICATION (N)	MAXIMUM COVER (N) LF	HEIGHT OF DI/MH (N) LF	DESCRIPTION	STATION	DRAINAGE PLAN No.	DRAINAGE SYSTEM No. ⬡	DRAINAGE UNIT ◯
3	k																										SJ	12.70		JACK 24" RCP	50.02 Lt C 5+98 to 59.90 Rt C 6+50		3	k
	l							1.36			239														1				3.5	GO DI	52.68 Lt C 3+07			l
	m									44																	PJ	7.00		18" APC (A) w/ Conc Bkf	52.68 Lt C 3+07 to 71.65 Lt C 4+71			m
	n							1.46			435										1		1						3.6	G2 MH w/ BOLTDOWN COVER	71.65 Lt C 4+71			n
	o									41																	SJ	2.00		18" APC (A) w/ Conc Bkf	71.65 Lt C 4+71 to 50.02 Lt C 5+98			o
4	a																													REMOVE Culv	42.07 Rt C 7+22 to 62.10 Rt C 7+31	D-1	4	a
5	a							1.31			239														1				3.0	G2 DI	42.07 Rt C 7+22	D-1	5	a
	b																										PJ	2.90		12" APC (A)	42.07 Rt C 7+22 to 62.10 Rt C 7+31			b
	c	1																												12" CSP FES	62.10 Rt C 7+31			c
6	a																													REMOVE DI	297.56 Lt C 7+77	D-1	6	a
	b																													REMOVE Culv	297.56 Lt C 7+77 to 215.50 Lt C 8+31			b
7	a							1.55			174															1			3.5	OS DI w/ 1 SIDE OPENING	297.56 Lt C 7+77	D-1	7	a
	b																										SJ	4.70		18" APC (A)	297.56 Lt C 7+77 to 215.50 Lt C 8+31			b
	c		1																											18" CSP FES	215.50 Lt C 8+31			c
	d												1.14				8.0													RSP	215.50 Lt C 8+31			d
8	a																													REMOVE Culv	96.50 Lt C 9+68 to 38.36 Lt C 9+70	D-1	8	a
9	a							0.75			502																			DEBRIS RACK	96.50 Lt C 9+68	D-1	9	a
	b											3															DD	3.10		12" CSP DD	96.50 Lt C 9+68 to 38.36 Lt C 9+70			b
	c																	0.59	~~28~~											18" APL	38.36 Lt C 9+70 to 0.99 Rt C 9+97			c
	d							2.48			435										1		1						7.6	G2 MH w/ BOLTDOWN COVER	0.99 Rt C 9+97			d
	e																	0.61	~~32~~											18" APL	0.99 Rt C 9+97 to 40.42 Rt C 10+25			e
	f		1																											18" CSP FES	40.42 Rt C 10+25			f
		1	2					8.91		85	2024	3	1.14				8.0	1.20	~~60~~		2		2		2	1				SHEET TOTAL				

2 2

2 REVISED PER ADDENDUM No. 2 DATED FEBRUARY 28, 2011

DRAINAGE QUANTITIES

DQ-4

STATE OF CALIFORNIA - DEPARTMENT OF TRANSPORTATION
Caltrans

CONSULTANT FUNCTIONAL SUPERVISOR: HAN-BIN LIANG
CALCULATED-DESIGNED BY: JENNIFER ABRAMS
CHECKED BY: CHRIS SEWELL
REVISED BY: J.ABRAMS
DATE REVISED: 06/09/10

LAST REVISION 06-09-10
DATE PLOTTED => 23-FEB-2011
TIME PLOTTED => 10:47

Dist	COUNTY	ROUTE	POST MILES TOTAL PROJECT	SHEET No.	TOTAL SHEETS
04	SCI	17	0.0/2.8	109	278

REGISTERED CIVIL ENGINEER 06/09/2010 DATE

9-7-10
PLANS APPROVAL DATE

REGISTERED PROFESSIONAL ENGINEER CHRISTOPHER SEWELL No. C 64807 Exp. 6/30/11 CIVIL STATE OF CALIFORNIA

THE STATE OF CALIFORNIA OR ITS OFFICERS OR AGENTS SHALL NOT BE RESPONSIBLE FOR THE ACCURACY OR COMPLETENESS OF SCANNED COPIES OF THIS PLAN SHEET.

WRECO
1243 ALPINE ROAD
SUITE 108
WALNUT CREEK, CA 94596

CALTRANS
111 GRAND AVENUE
OAKLAND, CA 94612

DRAINAGE QUANTITIES

DRAINAGE SYSTEM No.	DRAINAGE UNIT	REMOVE INLET	REMOVE MANHOLE	REMOVE CULVERT	REMOVE DD	REMOVE CONCRETE	REMOVE HEADWALL	ABANDON CULVERT	SAND BACKFILL	ALTERNATIVE PIPE CULVERT 12" (TYPE A)	18" (TYPE A)	18" (TYPE B)	24" (TYPE A)	24" (TYPE B)	30" (TYPE A)	30" (TYPE B)	CSP DD 12"	18"	24"	30"	36"	JACK 24" RCP	CSP 42"	48"	18" ASP	ALTERNATIVE PIPELINER 18"	24"	30"	36"	REHAB RISER METHOD A	METHOD B	METHOD C	DESCRIPTION	STATION	DRAINAGE PLAN No.	DRAINAGE SYSTEM No.	DRAINAGE UNIT
		EA	EA	FT	FT	CY	EA	LF	CY	FT	FT	FT	FT	FT	FT	FT	FT	FT	FT	FT	FT	FT	FT	FT	FT	FT	FT	FT	FT	FT	FT	FT					
9	g																																RSP	40.42 Rt C 10+25		9	g
	h																																Maint CLEANOUT	0.93 Lt C 3+50			h
	i																								299								18" ASP	0.93 Lt C 3+50 to 3.79 Rt C 6+50			i
	j																																Maint CLEANOUT	3.79 Rt C 6+50			j
	k																								174								18" ASP	3.79 Rt C 6+50 to 2.42 Rt C 8+25			k
	l																																Maint CLEANOUT	2.42 Rt C 8+25			l
	m																								170								18" ASP	2.42 Rt C 8+25 to 0.99 Rt C 9+97			m
10	a	1																															REMOVE DI	37.82 Lt C 11+12	D-1	10	a
	b				64																												REMOVE DD	37.82 Lt C 11+12 to 71.44 Lt C 11+63			b
11	a																																GO DI	37.82 Lt C 11+12	D-1	11	a
	b																67																12" CSP DD w/ TEE w/ ANCHOR ASSEMBLIES	37.82 Lt C 11+12 to 71.44 Lt C 11+63			b
	c																																RSP	71.44 Lt C 11+63			c
12	a																						1							14			REHAB RISER, METHOD A	97.50 Lt C 12+11	D-1	12	a
	b																										300						24" APL	97.50 Lt C 12+11 to 146.08 Rt C 13+96			b
	c																		16														24" CSP DD w/ TEE w/ ANCHOR ASSEMBLIES	146.08 Rt C 13+96 to 149.34 Rt C 14+02	D-2		c
	d																																RSP	149.34 Rt C 14+02			d
13	a																																G2 DI	40.04 Rt C 16+10	D-2	13	a
	b										81																						18" APC (A)	40.04 Rt C 16+10 to 39.04 Rt C 17+00			b
	c																																G2 MH	39.04 Rt C 17+00			c
	d																72																12" CSP DD w/ TEE w/ ANCHOR ASSEMBLIES	39.04 Rt C 17+00 to 86.95 Rt C 17+43			d
	e																																RSP	86.95 Rt C 17+43			e
14	a																																DEBRIS RACK	79.57 Lt C 17+74	D-2	14	a
	b																										165						24" APL	79.57 Lt C 17+74 to 83.00 Rt C 17+53			b
	c																																24" CSP FES	83.00 Rt C 17+53			c
	d																																RSP	83.00 Rt C 17+53			d
		1			64						81						139		16				1		643		465			14			SHEET TOTAL				

2

2 REVISED PER ADDENDUM No. 2 DATED FEBRUARY 28, 2011

DRAINAGE QUANTITIES

DQ-5

STATE OF CALIFORNIA - DEPARTMENT OF TRANSPORTATION
Caltrans

JENNIFER ABRAMS | REVISED BY | J.ABRAMS
CHRIS SEWELL | DATE REVISED | 06/09/10
CALCULATED-DESIGNED BY
CHECKED BY
CONSULTANT FUNCTIONAL SUPERVISOR
HAN-BIN LIANG

LAST REVISION 06-09-10 | DATE PLOTTED => 23-FEB-2011 | TIME PLOTTED => 17:15

Dist	COUNTY	ROUTE	POST MILES TOTAL PROJECT	SHEET No.	TOTAL SHEETS
04	SCI	17	0.0/2.8	110	278

REGISTERED CIVIL ENGINEER 06/09/2010 DATE

9-7-10
PLANS APPROVAL DATE

REGISTERED PROFESSIONAL ENGINEER CHRISTOPHER SEWELL No. C 64807 Exp. 6/30/11 CIVIL STATE OF CALIFORNIA

THE STATE OF CALIFORNIA OR ITS OFFICERS OR AGENTS SHALL NOT BE RESPONSIBLE FOR THE ACCURACY OR COMPLETENESS OF SCANNED COPIES OF THIS PLAN SHEET.

WRECO
1243 ALPINE ROAD
SUITE 108
WALNUT CREEK, CA 94596

CALTRANS
111 GRAND AVENUE
OAKLAND, CA 94612

DRAINAGE QUANTITIES

DRAINAGE SYSTEM No. ⬡	DRAINAGE UNIT ◯	CSP FES 12" EA	CSP FES 18" EA	CSP FES 24" EA	CSP FES 30" EA	CSP FES 36" EA	48" WSP FT	MINOR Conc MINOR STRUCTURE CY	MINOR Conc Misc CONSTRUCTION CY	Conc BACKFILL (RAPID STRENGTH Conc) CY	Misc IRON AND STEEL LB	PIPE ANCHOR ASSEMBLY EA	ROCK SLOPE PROTECTION (BACKING No. 3, METHOD B) CY	ROCK SLOPE PROTECTION (BACKING No. 2, METHOD B) CY	ROCK SLOPE PROTECTION (FACING, METHOD B) CY	ROCK SLOPE PROTECTION (LIGHT, METHOD B) CY	ROCK SLOPE PROTECTION FABRIC SQYD	CULVERT CONTACT GROUTING CY	CONTACT GROUT PORTS EA	CHECKERED PLATE (N) EA	BOLTDOWN COVER (N) EA	24" TO 18" ECCENTRIC REDUCER Conc COLLAR EA	FRAME & COVER OR FRAME & GRATE (N) G2 MH EA	FRAME & COVER OR FRAME & GRATE (N) Maint CLEANOUT (17½" Dia) EA	FRAME & COVER OR FRAME & GRATE (N) TYPE 24-12X EA	FRAME & COVER OR FRAME & GRATE (N) OS PLATE EA	PIPE JOINT CLASSIFICATION (N)	MAXIMUM COVER (N) LF	HEIGHT OF DI/MH (N) LF	DESCRIPTION	STATION	DRAINAGE PLAN No.	DRAINAGE SYSTEM No. ⬡	DRAINAGE UNIT ◯
9	g													1.96			9.6													RSP	40.42 Rt C 10+25		9	g
	h							0.28			69										1			1					2.0	Maint CLEANOUT	0.93 Lt C 3+50			h
	i																											0.21		18" ASP	0.93 Lt C 3+50 to 3.79 Rt C 6+50			i
	j							0.28			69										1			1					2.0	Maint CLEANOUT	3.79 Rt C 6+50			j
	k																											0.21		18" ASP	3.79 Rt C 6+50 to 2.42 Rt C 8+25			k
	l							0.28			69										1			1					2.0	Maint CLEANOUT	2.42 Rt C 8+25			l
	m																											1.00		18" ASP	2.42 Rt C 8+25 to 0.99 Rt C 9+97			m
10	a																													REMOVE DI	37.82 Lt C 11+12	D-1	10	a
	b																													REMOVE DD	37.82 Lt C 11+12 to 71.44 Lt C 11+63			b
11	a							1.24			239														1				3.0	GO DI	37.82 Lt C 11+12	D-1	11	a
	b											5 ~~2~~															DD	2.00		12" CSP DD w/ TEE w/ ANCHOR ASSEMBLIES	37.82 Lt C 11+12 to 71.44 Lt C 11+63			b
	c												0.70				6.0													RSP	71.44 Lt C 11+63			c
12	a																													REHAB RISER, METHOD A	97.50 Lt C 12+11	D-1	12	a
	b																	4.91 ~~200~~												24" APL	97.50 Lt C 12+11 to 146.08 Rt C 13+96			b
	c											4 ~~2~~															DD	0.00		24" CSP DD w/ TEE w/ ANCHOR ASSEMBLIES	146.08 Rt C 13+96 to 149.34 Rt C 14+02	D-2		c
	d														11.19		29.3													RSP	149.34 Rt C 14+02			d
13	a							1.44			239														1				3.5	G2 DI	40.04 Rt C 16+10	D-2	13	a
	b																										PJ	2.00		18" APC (A)	40.04 Rt C 16+10 to 39.04 Rt C 17+00			b
	c							1.64			435												1						2.8	G2 MH	39.04 Rt C 17+00			c
	d											5 ~~2~~															DD	0.00		12" CSP DD w/ TEE w/ ANCHOR ASSEMBLIES	39.04 Rt C 17+00 to 86.95 Rt C 17+43			d
	e												0.70				6.0													RSP	86.95 Rt C 17+43			e
14	a							0.75			502																			DEBRIS RACK	79.57 Lt C 17+74	D-2	14	a
	b																	2.70 ~~108~~												24" APL	79.57 Lt C 17+74 to 83.00 Rt C 17+53			b
	c			1																										24" CSP FES	83.00 Rt C 17+53			c
	d													3.48			14.7													RSP	83.00 Rt C 17+53			d
				1				5.91			1622	14 ~~6~~	1.40	5.44	11.19		65.6	7.61 ~~300~~			3		1	3	2					SHEET TOTAL				

2 2

2 REVISED PER ADDENDUM No. 2 DATED FEBRUARY 28, 2011

DRAINAGE QUANTITIES

DQ-6

STATE OF CALIFORNIA - DEPARTMENT OF TRANSPORTATION
Caltrans

CONSULTANT FUNCTIONAL SUPERVISOR: HAN-BIN LIANG
CALCULATED-DESIGNED BY: JENNIFER ABRAMS
CHECKED BY: CHRIS SEWELL
REVISED BY: J.ABRAMS
DATE REVISED: 06/09/10

LAST REVISION 06-09-10
DATE PLOTTED => 23-FEB-2011
TIME PLOTTED => 10:47

Dist	COUNTY	ROUTE	POST MILES TOTAL PROJECT	SHEET No.	TOTAL SHEETS
04	SCI	17	0.0/2.8	111	278

REGISTERED CIVIL ENGINEER 06/09/2010 DATE

9-7-10
PLANS APPROVAL DATE

REGISTERED PROFESSIONAL ENGINEER CHRISTOPHER SEWELL No. C 64807 Exp. 6/30/11 CIVIL STATE OF CALIFORNIA

THE STATE OF CALIFORNIA OR ITS OFFICERS OR AGENTS SHALL NOT BE RESPONSIBLE FOR THE ACCURACY OR COMPLETENESS OF SCANNED COPIES OF THIS PLAN SHEET.

WRECO
1243 ALPINE ROAD
SUITE 108
WALNUT CREEK, CA 94596

CALTRANS
111 GRAND AVENUE
OAKLAND, CA 94612

DRAINAGE QUANTITIES

DRAINAGE SYSTEM No.	DRAINAGE UNIT	REMOVE INLET (EA)	REMOVE MANHOLE (EA)	REMOVE CULVERT (FT)	REMOVE DD (FT)	REMOVE CONCRETE (CY)	REMOVE HEADWALL (EA)	ABANDON CULVERT (LF)	SAND BACKFILL (CY)	ALTERNATIVE PIPE CULVERT 12" (TYPE A) (FT)	18" (TYPE A) (FT)	18" (TYPE B) (FT)	24" (TYPE A) (FT)	24" (TYPE B) (FT)	30" (TYPE A) (FT)	30" (TYPE B) (FT)	CSP DD 12" (FT)	18" (FT)	24" (FT)	30" (FT)	36" (FT)	JACK 24" RCP (FT)	CSP 42" (FT)	48" (FT)	18" ASP (FT)	ALTERNATIVE PIPELINER 18" (FT)	24" (FT)	30" (FT)	36" (FT)	REHAB RISER METHOD A (FT)	METHOD B (FT)	METHOD C (FT)	DESCRIPTION	STATION	DRAINAGE PLAN No.	DRAINAGE SYSTEM No.	DRAINAGE UNIT
15	a				102																												REMOVE DD	26.36 Rt C 18+63 to 115.87 Rt C 18+64	D-2	15	a
16	a																111																12" CSP DD w/ TEE w/ ANCHOR ASSEMBLIES	26.36 Rt C 18+63 to 115.87 Rt C 18+64	D-2	16	a
	b																																RSP	115.87 Rt C 18+64			b
17	a							47	5.47																								ABANDON Culv	100.65 Lt C 20+26 to 89.11 Lt C 19+87	D-2	17	a
	b			10																													REMOVE RISER	156.57 Lt C 19+76			b
18	a																							1							31		REHAB RISER, METHOD B	156.56 Lt C 19.76	D-2	18	a
	b																											402					30" APL	156.56 Lt C 19.76 to 224.03 Rt C 21+08			b
	c																																30" CSP FES	224.03 Rt C 21+08			c
	d																																RSP	224.03 Rt C 21+08			d
19	a				196																												REMOVE DD	30.92 Rt C 20+60 to 196.34 Rt C 20+65	D-2	19	a
20	a																199																12" CSP DD w/ TEE w/ ANCHOR ASSEMBLIES	30.92 Rt C 20+60 to 196.34 Rt C 20+65	D-2	20	a
	b																																RSP	196.34 Rt C 20+65			b
21	a																																RSP	165.43 Rt C 21+79	D-2	21	a
22	a																																GO DI	36.59 Lt C 23+69	D-2	22	a
	b												150																				24" APC (A) w/ Conc Bkf	36.59 Lt C 23+69 to 34.00 Lt C 25+20			b
	c																																GO DI	34.00 Lt C 25+20	D-3		c
	d												147																				24" APC (A) w/ Conc Bkf	34.00 Lt C 25+20 to 35.07 Lt C 26+70			d
	e																																GO DI	35.07 Lt C 26+70			e
	f												65																				24" APC (A) w/ Conc Bkf	35.07 Lt C 26+70 to 33.97 Rt C 26+71			f
	g																																GO DI	33.97 Rt C 26+71			g
	h																	27															18" CSP DD w/ TEE w/ ANCHOR ASSEMBLIES	33.97 Rt C 26+71 to 54.63 Rt C 26+72			h
	i																																RSP	54.63 Rt C 26+72			i
	j																																GO DI	34.69 Rt C 26+10			j
	k										60																						18" APC (A) w/ Conc Bkf	34.69 Rt C 26+10 to 33.97 Rt C 26+71			k
				10	298			47	5.47		60		362				310	27						1				402			31		SHEET TOTAL				

2

2 REVISED PER ADDENDUM No. 2 DATED FEBRUARY 28, 2011

DRAINAGE QUANTITIES

DQ-7

STATE OF CALIFORNIA - DEPARTMENT OF TRANSPORTATION
Caltrans

CONSULTANT FUNCTIONAL SUPERVISOR: HAN-BIN LIANG
CALCULATED-DESIGNED BY: JENNIFER ABRAMS
CHECKED BY: CHRIS SEWELL
REVISED BY: J.ABRAMS
DATE REVISED: 06/09/10

LAST REVISION 06-09-10
DATE PLOTTED => 23-FEB-2011
TIME PLOTTED => 17:16

Dist	COUNTY	ROUTE	POST MILES TOTAL PROJECT	SHEET No.	TOTAL SHEETS
04	SCI	17	0.0/2.8	112	278

REGISTERED CIVIL ENGINEER 06/09/2010 DATE

9-7-10
PLANS APPROVAL DATE

REGISTERED PROFESSIONAL ENGINEER CHRISTOPHER SEWELL No. C 64807 Exp. 6/30/11 CIVIL STATE OF CALIFORNIA

THE STATE OF CALIFORNIA OR ITS OFFICERS OR AGENTS SHALL NOT BE RESPONSIBLE FOR THE ACCURACY OR COMPLETENESS OF SCANNED COPIES OF THIS PLAN SHEET.

WRECO
1243 ALPINE ROAD
SUITE 108
WALNUT CREEK, CA 94596

CALTRANS
111 GRAND AVENUE
OAKLAND, CA 94612

DRAINAGE QUANTITIES

DRAINAGE SYSTEM No.	DRAINAGE UNIT	CSP FES 12"	CSP FES 18"	CSP FES 24"	CSP FES 30"	CSP FES 36"	48" WSP	MINOR Conc: MINOR STRUCTURE	MINOR Conc: Misc CONSTRUCTION	Conc BACKFILL (RAPID STRENGTH Conc)	Misc IRON AND STEEL	PIPE ANCHOR ASSEMBLY	ROCK SLOPE PROTECTION (BACKING No. 3, METHOD B)	ROCK SLOPE PROTECTION (BACKING No. 2, METHOD B)	ROCK SLOPE PROTECTION (FACING, METHOD B)	ROCK SLOPE PROTECTION (LIGHT, METHOD B)	ROCK SLOPE PROTECTION FABRIC	CULVERT CONTACT GROUTING	~~CONTACT GROUT PORTS~~	CHECKERED PLATE (N)	BOLTDOWN COVER (N)	24" TO 18" ECCENTRIC REDUCER Conc COLLAR	FRAME & COVER OR FRAME & GRATE (N): G2 MH	FRAME & COVER OR FRAME & GRATE (N): Maint CLEANOUT (17½" Dia)	FRAME & COVER OR FRAME & GRATE (N): TYPE 24-12X	FRAME & COVER OR FRAME & GRATE (N): OS PLATE	PIPE JOINT CLASSIFICATION (N)	MAXIMUM COVER (N)	HEIGHT OF DI/MH (N)	DESCRIPTION	STATION	DRAINAGE PLAN No.	DRAINAGE SYSTEM No.	DRAINAGE UNIT
		EA	EA	EA	EA	EA	FT	CY	CY	CY	LB	EA	CY	CY	CY	CY	SQYD	CY	EA	EA	EA	EA	EA	EA	EA	EA		LF	LF					
15	a																													REMOVE DD	26.36 Rt C 18+63 to 115.87 Rt C 18+64	D-2	15	a
16	a											6 ~~2~~														DD	1.80		12" CSP DD w/ TEE w/ ANCHOR ASSEMBLIES	26.36 Rt C 18+63 to 115.87 Rt C 18+64	D-2	16	a
	b												0.70				6.0													RSP	115.87 Rt C 18+64			b
17	a																													ABANDON Culv	100.65 Lt C 20+26 to 89.11 Lt C 19+87	D-2	17	a
	b																													REMOVE RISER	156.57 Lt C 19+76			b
18	a						31																							REHAB RISER, METHOD B	156.56 Lt C 19.76	D-2	18	a
	b																	8.04 ~~268~~												30" APL	156.56 Lt C 19.76 to 224.03 Rt C 21+08			b
	c				1																									30" CSP FES	224.03 Rt C 21+08			c
	d															22.86	48.1													RSP	224.03 Rt C 21+08			d
19	a																													REMOVE DD	30.92 Rt C 20+60 to 196.34 Rt C 20+65	D-2	19	a
20	a											7 ~~2~~														DD	1.80		12" CSP DD w/ TEE w/ ANCHOR ASSEMBLIES	30.92 Rt C 20+60 to 196.34 Rt C 20+65	D-2	20	a
	b												0.70				6.0													RSP	196.34 Rt C 20+65			b
21	a												2.82				21.8													RSP	165.43 Rt C 21+79	D-2	21	a
22	a							1.49			239														1			4.0		GO DI	36.59 Lt C 23+69	D-2	22	a
	b									66																PJ	2.00			24" APC (A) w/ Conc Bkf	36.59 Lt C 23+69 to 34.00 Lt C 25+20			b
	c							1.51			239														1			4.1		GO DI	34.00 Lt C 25+20	D-3		c
	d									65																PJ	2.10			24" APC (A) w/ Conc Bkf	34.00 Lt C 25+20 to 35.07 Lt C 26+70			d
	e							1.51			239														1			4.1		GO DI	35.07 Lt C 26+70			e
	f									41																SJ	2.19			24" APC (A) w/ Conc Bkf	35.07 Lt C 26+70 to 33.97 Rt C 26+71			f
	g							1.61			239														1			4.5		GO DI	33.97 Rt C 26+71			g
	h											4 ~~2~~														DD	3.00			18" CSP DD w/ TEE w/ ANCHOR ASSEMBLIES	33.97 Rt C 26+71 to 54.63 Rt C 26+72			h
	i														3.97		14.8													RSP	54.63 Rt C 26+72			i
	j							1.36			239														1			3.5		GO DI	34.69 Rt C 26+10			j
	k									21																DD	2.00			18" APC (A) w/ Conc Bkf	34.69 Rt C 26+10 to 33.97 Rt C 26+71			k
					1		31	7.48		193	1195	17 ~~6~~	4.22		3.97	22.86	96.7	8.04 ~~258~~							5					SHEET TOTAL				

2 2

2 REVISED PER ADDENDUM No. 2 DATED FEBRUARY 28, 2011

DRAINAGE QUANTITIES

DQ-8

REVISED BY	J.ABRAMS
DATE REVISED	06/09/10
JENNIFER ABRAMS	
CHRIS SEWELL	
CALCULATED-DESIGNED BY	
CHECKED BY	
CONSULTANT FUNCTIONAL SUPERVISOR	HAN-BIN LIANG

STATE OF CALIFORNIA - DEPARTMENT OF TRANSPORTATION
Caltrans

LAST REVISION 06-09-10
DATE PLOTTED => 23-FEB-2011
TIME PLOTTED => 10:36

Dist	COUNTY	ROUTE	POST MILES TOTAL PROJECT	SHEET No.	TOTAL SHEETS
04	SCI	17	0.0/2.8	113	278

REGISTERED CIVIL ENGINEER 06/09/2010 DATE

9-7-10
PLANS APPROVAL DATE

REGISTERED PROFESSIONAL ENGINEER CHRISTOPHER SEWELL No. C 64807 Exp. 6/30/11 CIVIL STATE OF CALIFORNIA

THE STATE OF CALIFORNIA OR ITS OFFICERS OR AGENTS SHALL NOT BE RESPONSIBLE FOR THE ACCURACY OR COMPLETENESS OF SCANNED COPIES OF THIS PLAN SHEET.

WRECO
1243 ALPINE ROAD
SUITE 108
WALNUT CREEK, CA 94596

CALTRANS
111 GRAND AVENUE
OAKLAND, CA 94612

DRAINAGE QUANTITIES

DRAINAGE SYSTEM No.	DRAINAGE UNIT	REMOVE INLET	REMOVE MANHOLE	REMOVE CULVERT	REMOVE DD	REMOVE CONCRETE	REMOVE HEADWALL	ABANDON CULVERT	SAND BACKFILL	ALTERNATIVE PIPE CULVERT 12" (TYPE A)	18" (TYPE A)	18" (TYPE B)	24" (TYPE A)	24" (TYPE B)	30" (TYPE A)	30" (TYPE B)	CSP DD 12"	18"	24"	30"	36"	JACK 24" RCP	CSP 42"	48"	18" ASP	ALTERNATIVE PIPELINER 18"	24"	30"	36"	REHAB RISER METHOD A	METHOD B	METHOD C	DESCRIPTION	STATION	DRAINAGE PLAN No.	DRAINAGE SYSTEM No.	DRAINAGE UNIT
		EA	EA	FT	FT	CY	EA	LF	CY	FT	FT	FT	FT	FT	FT	FT	FT	FT	FT	FT	FT	FT	FT	FT	FT	FT	FT	FT	FT	FT	FT	FT					
23	a	1																															REMOVE DI	31.10 Lt C 26+70	D-3	23	a
	b			65																													REMOVE Culv	31.10 Lt C 26+70 to 33.97 Rt C 26+71			b
24	a				58																												REMOVE DD	30.12 Rt C 27+68 to 81.56 Rt C 27+69	D-3	24	a
25	a																																GO DI	30.12 Rt C 27+68	D-3	25	a
	b																61																12" CSP DD w/ TEE w/ ANCHOR ASSEMBLIES	30.12 Rt C 27+68 to 81.56 Rt C 27+69			b
26	a	1																															REMOVE DI	38.72 Lt C 28+81	D-3	26	a
27	a																																GO DI	38.72 Lt C 28+81	D-3	27	a
	b																									163							18" APL	38.72 Lt C 28+81 to 123.13 Rt C 28+95			b
	c																																18" CSP FES	123.13 Rt C 28+95			c
	d																																SUPPLEMENT RSP	123.13 Rt C 28+95			d
28	a	1																															REMOVE DI	31.50 Lt C 33+76	D-3	28	a
	b			23																													REMOVE Culv (PORTION)	31.50 Lt C 33+76 to 12.73 Lt C 33+90			b
	c							78	5.11																							ABANDON Culv	12.73 Lt C 33+90 to 51.92 Rt C 32.37			c
29	a																																GO DI	31.50 Lt C 33+76.44	D-3	29	a
	b												40																				24" APC (A) w/ Conc Bkf	31.50 Lt C 33+76.44 to 3.31 Rt C 34+00			b
	c																																G2 MH w/ BOLTDOWN COVER	3.31 Rt C 34+00			c
	d												27																				24" APC (A) w/ Conc Bkf	3.31 Rt C 34+00 to 31.26 Rt C 34+19			d
	e																																G2 MH	31.26 Rt C 34+19			e
	f																	34															18" CSP DD w/ TEE w/ ANCHOR ASSEMBLIES	31.26 Rt C 34+19 to 51.92 Rt C 32+37			f
	g																																SUPPLEMENT RSP	51.92 Rt C 32+37			g
	h																																Maint CLEANOUT	1.42 Lt C 28+00			h
	i																								298								18" ASP	1.42 Lt C 28+00 to 0.69 Rt C 31+00			i
	j																																Maint CLEANOUT	0.69 Rt C 31+00			j
	k																								298								18" ASP	0.69 Rt C 31+00 to 3.31 Rt C 34+00			k
		3		88	58			78	5.11				67				61	34							596	163							SHEET TOTAL				

2

2 REVISED PER ADDENDUM No. 2 DATED FEBRUARY 28, 2011

DRAINAGE QUANTITIES

DQ-9

STATE OF CALIFORNIA - DEPARTMENT OF TRANSPORTATION
Caltrans

CONSULTANT FUNCTIONAL SUPERVISOR: HAN-BIN LIANG
CALCULATED-DESIGNED BY: JENNIFER ABRAMS
CHECKED BY: CHRIS SEWELL
REVISED BY: J.ABRAMS
DATE REVISED: 06/09/10

LAST REVISION 06-09-10
DATE PLOTTED => 23-FEB-2011
TIME PLOTTED => 17:16

Dist	COUNTY	ROUTE	POST MILES TOTAL PROJECT	SHEET No.	TOTAL SHEETS
04	SCI	17	0.0/2.8	114	278

REGISTERED CIVIL ENGINEER 06/09/2010 DATE

9-7-10
PLANS APPROVAL DATE

REGISTERED PROFESSIONAL ENGINEER CHRISTOPHER SEWELL No. C 64807 Exp. 6/30/11 CIVIL STATE OF CALIFORNIA

THE STATE OF CALIFORNIA OR ITS OFFICERS OR AGENTS SHALL NOT BE RESPONSIBLE FOR THE ACCURACY OR COMPLETENESS OF SCANNED COPIES OF THIS PLAN SHEET.

WRECO
1243 ALPINE ROAD
SUITE 108
WALNUT CREEK, CA 94596

CALTRANS
111 GRAND AVENUE
OAKLAND, CA 94612

DRAINAGE QUANTITIES

DRAINAGE SYSTEM No.	DRAINAGE UNIT	CSP FES 12" EA	CSP FES 18" EA	CSP FES 24" EA	CSP FES 30" EA	CSP FES 36" EA	48" WSP FT	MINOR Conc MINOR STRUCTURE CY	MINOR Conc Misc CONSTRUCTION CY	Conc BACKFILL (RAPID STRENGTH Conc) CY	Misc IRON AND STEEL LB	PIPE ANCHOR ASSEMBLY EA	ROCK SLOPE PROTECTION (BACKING No. 3, METHOD B) CY	ROCK SLOPE PROTECTION (BACKING No. 2, METHOD B) CY	ROCK SLOPE PROTECTION (FACING, METHOD B) CY	ROCK SLOPE PROTECTION (LIGHT, METHOD B) CY	ROCK SLOPE PROTECTION FABRIC SQYD	CULVERT CONTACT GROUTING CY	CONTACT GROUT PORTS EA	CHECKERED PLATE (N) EA	BOLTDOWN COVER (N) EA	24" TO 18" ECCENTRIC REDUCER Conc COLLAR EA	FRAME & COVER OR FRAME & GRATE (N) G2 MH EA	FRAME & COVER OR FRAME & GRATE (N) Maint CLEANOUT (17½" Dia) EA	FRAME & COVER OR FRAME & GRATE (N) TYPE 24-12X EA	FRAME & COVER OR FRAME & GRATE (N) OS PLATE EA	PIPE JOINT CLASSIFICATION (N)	MAXIMUM COVER (N) LF	HEIGHT OF DI/MH (N) LF	DESCRIPTION	STATION	DRAINAGE PLAN No.	DRAINAGE SYSTEM No.	DRAINAGE UNIT
23	a																													REMOVE DI	31.10 Lt C 26+70	D-3	23	a
	b																													REMOVE Culv	31.10 Lt C 26+70 to 33.97 Rt C 26+71			b
24	a																													REMOVE DD	30.12 Rt C 27+68 to 81.56 Rt C 27+69	D-3	24	a
25	a							1.24			239														1				3.0	GO DI	30.12 Rt C 27+68	D-3	25	a
	b											5 ~~2~~															DD	2.00		12" CSP DD w/ TEE w/ ANCHOR ASSEMBLIES	30.12 Rt C 27+68 to 81.56 Rt C 27+69			b
26	a																													REMOVE DI	38.72 Lt C 28+81	D-3	26	a
27	a							1.24			239														1				3.0	GO DI	38.72 Lt C 28+81	D-3	27	a
	b																	2.07 ~~108~~												18" APL	38.72 Lt C 28+81 to 123.13 Rt C 28+95			b
	c		1																											18" CSP FES	123.13 Rt C 28+95			c
	d												1.14			8.0														SUPPLEMENT RSP	123.13 Rt C 28+95			d
28	a																													REMOVE DI	31.50 Lt C 33+76	D-3	28	a
	b																													REMOVE Culv (PORTION)	31.50 Lt C 33+76 to 12.73 Lt C 33+90			b
	c																													ABANDON Culv	12.73 Lt C 33+90 to 51.92 Rt C 32.37			c
29	a							1.24			239														1				3.0	GO DI	31.50 Lt C 33+76.44	D-3	29	a
	b									21																	SJ	5.40		24" APC (A) w/ Conc Bkf	31.50 Lt C 33+76.44 to 3.31 Rt C 34+00			b
	c							2.08			435										1		1						6.0	G2 MH w/ BOLTDOWN COVER	3.31 Rt C 34+00			c
	d									9																	SJ	4.99		24" APC (A) w/ Conc Bkf	3.31 Rt C 34+00 to 31.26 Rt C 34+19			d
	e							1.64			435												1						2.8	G2 MH	31.26 Rt C 34+19			e
	f											4 ~~2~~															DD	0.00		18" CSP DD w/ TEE w/ ANCHOR ASSEMBLIES	31.26 Rt C 34+19 to 51.92 Rt C 32+37			f
	g														7.06		25.6													SUPPLEMENT RSP	51.92 Rt C 32+37			g
	h							0.28			69										1			1					2.0	Maint CLEANOUT	1.42 Lt C 28+00			h
	i																											0.21		18" ASP	1.42 Lt C 28+00 to 0.69 Rt C 31+00			i
	j							0.28			69										1			1					2.0	Maint CLEANOUT	0.69 Rt C 31+00			j
	k																											0.21		18" ASP	0.69 Rt C 31+00 to 3.31 Rt C 34+00			k
			1					8.00		30	1725	9 ~~4~~	1.14		7.06		33.6	2.07 ~~108~~			3		2	2	3					SHEET TOTAL				

2 2

2 REVISED PER ADDENDUM No. 2 DATED FEBRUARY 28, 2011

DRAINAGE QUANTITIES

DQ-10

STATE OF CALIFORNIA - DEPARTMENT OF TRANSPORTATION
Caltrans

CONSULTANT FUNCTIONAL SUPERVISOR: HAN-BIN LIANG
CALCULATED-DESIGNED BY: JENNIFER ABRAMS
CHECKED BY: CHRIS SEWELL
REVISED BY: J.ABRAMS
DATE REVISED: 06/09/10

LAST REVISION 06-09-10
DATE PLOTTED => 23-FEB-2011
TIME PLOTTED => 10:36

Dist	COUNTY	ROUTE	POST MILES TOTAL PROJECT	SHEET No.	TOTAL SHEETS
04	SCI	17	0.0/2.8	115	278

REGISTERED CIVIL ENGINEER 06/09/2010 DATE

PLANS APPROVAL DATE 9-7-10

REGISTERED PROFESSIONAL ENGINEER CHRISTOPHER SEWELL No. C 64807 Exp. 6/30/11 CIVIL STATE OF CALIFORNIA

THE STATE OF CALIFORNIA OR ITS OFFICERS OR AGENTS SHALL NOT BE RESPONSIBLE FOR THE ACCURACY OR COMPLETENESS OF SCANNED COPIES OF THIS PLAN SHEET.

WRECO
1243 ALPINE ROAD
SUITE 108
WALNUT CREEK, CA 94596

CALTRANS
111 GRAND AVENUE
OAKLAND, CA 94612

DRAINAGE QUANTITIES

DRAINAGE SYSTEM No.	DRAINAGE UNIT	REMOVE INLET (EA)	REMOVE MANHOLE (EA)	REMOVE CULVERT (FT)	REMOVE DD (FT)	REMOVE CONCRETE (CY)	REMOVE HEADWALL (EA)	ABANDON CULVERT (LF)	SAND BACKFILL (CY)	ALTERNATIVE PIPE CULVERT 12" (TYPE A) (FT)	18" (TYPE A) (FT)	18" (TYPE B) (FT)	24" (TYPE A) (FT)	24" (TYPE B) (FT)	30" (TYPE A) (FT)	30" (TYPE B) (FT)	CSP DD 12" (FT)	18" (FT)	24" (FT)	30" (FT)	36" (FT)	JACK 24" RCP (FT)	CSP 42" (FT)	CSP 48" (FT)	18" ASP (FT)	ALTERNATIVE PIPELINER 18" (FT)	24" (FT)	30" (FT)	36" (FT)	REHAB RISER METHOD A (FT)	METHOD B (FT)	METHOD C (FT)	DESCRIPTION	STATION	DRAINAGE PLAN No.	DRAINAGE SYSTEM No.	DRAINAGE UNIT
30	a	1																															REMOVE DI	33.20 Lt C 37+79	D-3	30	a
	b			88																													REMOVE Culv	33.20 Lt C 37+79 to 43.71 Rt C 38+30			b
	c			14																													REMOVE Culv	43.71 Rt C 38+30 to 58.59 Rt C 38+29			c
31	a																								219								18" ASP	3.31 Rt C 34+00 to 3.69 Rt C 36+20	D-3	31	a
	b																																Maint CLEANOUT	3.69 Rt C 36+20			b
	c																								180								18" ASP	3.69 Rt C 36+20 to 3.04 Rt C 38+02			c
	d																																GDO DI	33.20 Lt C 37+79			d
	e											37																					18" APC (B) w/ Conc Bkf	33.20 Lt C 37+79 to 3.04 Rt C 38+02			e
	f																																G2 MH w/ BOLTDOWN COVER	3.04 Rt C 38+02			f
	g											49																					18" APC (B) w/ Conc Bkf	3.04 Rt C 38+02 to 43.71 Rt C 38+30			g
	h																																G2 DI	43.71 Rt C 38+30			h
	i										14																						18" APC (A)	43.71 Rt C 38+30 to 58.59 Rt C 38+29			i
	j																																18" CSP FES	58.59 Rt C 38+29			j
	k																																RSP	58.59 Rt C 38+29			k
32	a			20																													REMOVE Culv	35.50 Rt C 39+94 to 59.47 Rt C 40+00	D-3	32	a
33	a																																G2 DI	36.40 Rt C 39+75	D-3	33	a
	b									17																							12" APC (A)	36.40 Rt C 39+75 to 35.50 Rt C 39+94			b
	c																																G2 MH w/ BOLTDOWN COVER	35.50 Rt C 39+94			c
	d																31																12" CSP DD w/ TEE w/ ANCHOR ASSEMBLIES	35.50 Rt C 39+94 to 59.47 Rt C 40+00			d
34	a	1																															REMOVE DI	32.85 Lt C 41+25	D-4	34	a
35	a																								197								18" ASP	3.04 Rt C 38+02 to 1.43 Rt C 40+00	D-4	35	a
	b																																Maint CLEANOUT	1.43 Rt C 40+00			b
	c																								122								18" ASP	1.43 Rt C 40+00 to 2.01 Rt C 41+24			c
	d																																G2 MH w/ BOLTDOWN COVER	2.01 Rt C 41+24			d
	e										32																						18" APC (A) w/ Conc Bkf	2.01 Rt C 41+24 to 32.85 Lt C 41+25			e
		2		122						17	46	86					31								718								SHEET TOTAL				

2

2 REVISED PER ADDENDUM No. 2 DATED FEBRUARY 28, 2011

DRAINAGE QUANTITIES

DQ-11

STATE OF CALIFORNIA - DEPARTMENT OF TRANSPORTATION

Caltrans

CONSULTANT FUNCTIONAL SUPERVISOR: HAN-BIN LIANG

CALCULATED-DESIGNED BY: JENNIFER ABRAMS

CHECKED BY: CHRIS SEWELL

REVISED BY: J.ABRAMS

DATE REVISED: 06/09/10

LAST REVISION 06-09-10

DATE PLOTTED => 23-FEB-2011

TIME PLOTTED => 11:07

Dist	COUNTY	ROUTE	POST MILES TOTAL PROJECT	SHEET No.	TOTAL SHEETS
04	SCI	17	0.0/2.8	116	278

REGISTERED CIVIL ENGINEER 06/09/2010 DATE

9-7-10
PLANS APPROVAL DATE

REGISTERED PROFESSIONAL ENGINEER CHRISTOPHER SEWELL No. C 64807 Exp. 6/30/11 CIVIL STATE OF CALIFORNIA

THE STATE OF CALIFORNIA OR ITS OFFICERS OR AGENTS SHALL NOT BE RESPONSIBLE FOR THE ACCURACY OR COMPLETENESS OF SCANNED COPIES OF THIS PLAN SHEET.

WRECO
1243 ALPINE ROAD
SUITE 108
WALNUT CREEK, CA 94596

CALTRANS
111 GRAND AVENUE
OAKLAND, CA 94612

DRAINAGE QUANTITIES

DRAINAGE SYSTEM No.	DRAINAGE UNIT	CSP FES 12" EA	CSP FES 18" EA	CSP FES 24" EA	CSP FES 30" EA	CSP FES 36" EA	48" WSP FT	MINOR Conc MINOR STRUCTURE CY	MINOR Conc Misc CONSTRUCTION CY	Conc BACKFILL (RAPID STRENGTH Conc) CY	Misc IRON AND STEEL LB	PIPE ANCHOR ASSEMBLY EA	ROCK SLOPE PROTECTION (BACKING No. 3, METHOD B) CY	ROCK SLOPE PROTECTION (BACKING No. 2, METHOD B) CY	ROCK SLOPE PROTECTION (FACING, METHOD B) CY	ROCK SLOPE PROTECTION (LIGHT, METHOD B) CY	ROCK SLOPE PROTECTION FABRIC SQYD	CULVERT CONTACT GROUTING CY	~~CONTACT GROUT PORTS EA~~	CHECKERED PLATE (N) EA	BOLTDOWN COVER (N) EA	24" TO 18" ECCENTRIC REDUCER Conc COLLAR EA	FRAME & COVER OR FRAME & GRATE (N) G2 MH EA	FRAME & COVER OR FRAME & GRATE (N) Maint CLEANOUT (17½" Dia) EA	FRAME & COVER OR FRAME & GRATE (N) TYPE 24-12X EA	FRAME & COVER OR FRAME & GRATE (N) OS PLATE EA	PIPE JOINT CLASSIFICATION (N)	MAXIMUM COVER (N) LF	HEIGHT OF DI/MH (N) LF	DESCRIPTION	STATION	DRAINAGE PLAN No.	DRAINAGE SYSTEM No.	DRAINAGE UNIT
30	a																													REMOVE DI	33.20 Lt C 37+79	D-3	30	a
	b																													REMOVE Culv	33.20 Lt C 37+79 to 43.71 Rt C 38+30			b
	c																													REMOVE Culv	43.71 Rt C 38+30 to 58.59 Rt C 38+29			c
31	a																											0.21		18" ASP	3.31 Rt C 34+00 to 3.69 Rt C 36+20	D-3	31	a
	b							0.28			69										1			1					2.0	Maint CLEANOUT	3.69 Rt C 36+20			b
	c																											1.00		18" ASP	3.69 Rt C 36+20 to 3.04 Rt C 38+02			c
	d							1.97			473														2				4.1	GDO DI	33.20 Lt C 37+79			d
	e									19																	SJ	4.17		18" APC (B) w/ Conc Bkf	33.20 Lt C 37+79 to 3.04 Rt C 38+02			e
	f							1.87			435										1		1						5.2	G2 MH w/ BOLTDOWN COVER	3.04 Rt C 38+02			f
	g									24																	SJ	4.27		18" APC (B) w/ Conc Bkf	3.04 Rt C 38+02 to 43.71 Rt C 38+30			g
	h							1.46			239														1				3.6	G2 DI	43.71 Rt C 38+30			h
	i																										PJ	2.00		18" APC (A)	43.71 Rt C 38+30 to 58.59 Rt C 38+29			i
	j		1																											18" CSP FES	58.59 Rt C 38+29			j
	k														3.09		12.7													RSP	58.59 Rt C 38+29			k
32	a																													REMOVE Culv	35.50 Rt C 39+94 to 59.47 Rt C 40+00	D-4	32	a
33	a							1.31			239														1				3.0	G2 DI	36.40 Rt C 39+75	D-4	33	a
	b																										PJ	2.38		12" APC (A)	36.40 Rt C 39+75 to 35.50 Rt C 39+94			b
	c							1.57			435										1		1						4.0	G2 MH w/ BOLTDOWN COVER	35.50 Rt C 39+94			c
	d											4 ~~2~~															DD	2.10		12" CSP DD w/ TEE w/ ANCHOR ASSEMBLIES	35.50 Rt C 39+94 to 59.47 Rt C 40+00			d
34	a																													REMOVE DI	32.85 Lt C 41+25	D-4	34	a
35	a																											0.21		18" ASP	3.04 Rt C 38+02 to 1.43 Rt C 40+00	D-4	35	a
	b							0.28			69										1			1					2.0	Maint CLEANOUT	1.43 Rt C 40+00			b
	c																											1.00		18" ASP	1.43 Rt C 40+00 to 2.01 Rt C 41+24			c
	d							1.44			435										1		1						3.5	G2 MH w/ BOLTDOWN COVER	2.01 Rt C 41+24			d
	e									13																	SJ	3.00		18" APC (A) w/ Conc Bkf	2.01 Rt C 41+24 to 32.85 Lt C 41+25			e
			1					10.18		56	2394	4 ~~2~~			3.09		12.7				5		3	2	4					SHEET TOTAL				

2 2

2 REVISED PER ADDENDUM No. 2 DATED FEBRUARY 28, 2011

DRAINAGE QUANTITIES
DQ-12

STATE OF CALIFORNIA - DEPARTMENT OF TRANSPORTATION
Caltrans

CONSULTANT FUNCTIONAL SUPERVISOR: HAN-BIN LIANG

CALCULATED-DESIGNED BY: JENNIFER ABRAMS
CHECKED BY: CHRIS SEWELL
REVISED BY: J.ABRAMS
DATE REVISED: 06/09/10

LAST REVISION 06-09-10
DATE PLOTTED => 23-FEB-2011
TIME PLOTTED => 10:36

Dist	COUNTY	ROUTE	POST MILES TOTAL PROJECT	SHEET No.	TOTAL SHEETS
04	SCI	17	0.0/2.8	117	278

REGISTERED CIVIL ENGINEER 06/09/2010 DATE

PLANS APPROVAL DATE 9-7-10

REGISTERED PROFESSIONAL ENGINEER CHRISTOPHER SEWELL No. C 64807 Exp. 6/30/11 CIVIL STATE OF CALIFORNIA

THE STATE OF CALIFORNIA OR ITS OFFICERS OR AGENTS SHALL NOT BE RESPONSIBLE FOR THE ACCURACY OR COMPLETENESS OF SCANNED COPIES OF THIS PLAN SHEET.

WRECO
1243 ALPINE ROAD
SUITE 108
WALNUT CREEK, CA 94596

CALTRANS
111 GRAND AVENUE
OAKLAND, CA 94612

DRAINAGE QUANTITIES

DRAINAGE SYSTEM No.	DRAINAGE UNIT	REMOVE INLET	REMOVE MANHOLE	REMOVE CULVERT	REMOVE DD	REMOVE CONCRETE	REMOVE HEADWALL	ABANDON CULVERT	SAND BACKFILL	ALTERNATIVE PIPE CULVERT 12" (TYPE A)	18" (TYPE A)	18" (TYPE B)	24" (TYPE A)	24" (TYPE B)	30" (TYPE A)	30" (TYPE B)	CSP DD 12"	18"	24"	30"	36"	JACK 24" RCP	CSP 42"	48"	18" ASP	ALTERNATIVE PIPELINER 18"	24"	30"	36"	REHAB RISER METHOD A	METHOD B	METHOD C	DESCRIPTION	STATION	DRAINAGE PLAN No.	DRAINAGE SYSTEM No.	DRAINAGE UNIT
		EA	EA	FT	FT	CY	EA	LF	CY	FT	FT	FT	FT	FT	FT	FT	FT	FT	FT	FT	FT	FT	FT	FT	FT	FT	FT	FT	FT	FT	FT	FT					
35	f																																GO DI	32.85 Lt C 41+25	D-4	35	f
	g																									88							18" APL	32.85 Lt C 41+25 to 39.58 Rt C 41+76			g
	h																																18" CSP FES	39.58 Rt C 41+76			h
	i																																SUPPLEMENT RSP	39.58 Rt C 41+76			i
36	a	1																															REMOVE DI	118.59 Rt C 42+89	D-4	36	a
	b				124																												REMOVE DD	142.11 Rt C 43+08 to 221.17 Rt C 44+05			b
37	a																																OS DI w/ 2 SIDE OPENINGS	118.59 Rt C 42+89	D-4	37	a
	b										29																						18" APC (A)	118.59 Rt C 42+89 to 142.11 Rt C 43+08			b
	c																																G2 MH	142.11 Rt C 43+08			c
	d																	124															18" CSP DD w/ TEE w/ ANCHOR ASSEMBLIES	142.11 Rt C 43+08 to 219.24 Rt C 44+06			d
	e																																RSP	219.24 Rt C 44+06			e
38	a				98																												REMOVE DD	28.22 Rt C 43+74 to 110.44 Rt C 43+69	D-4	38	a
39	a																101																12" CSP DD w/ TEE w/ ANCHOR ASSEMBLIES	28.22 Rt C 43+74 to 110.44 Rt C 43+69	D-4	39	a
	b																																RSP	110.44 Rt C 43+69			b
40	a				12																												REMOVE DD	82.15 Lt C 44+60 to 48.19 Lt C 44+63	D-4	40	a
41	a																																GDO DI	48.19 Lt C 44+63	D-4	41	a
	b																	40															18" CSP DD	48.19 Lt C 44+63 to 82.15 Lt C 44+60			b
	c																															20	REHAB RISER, METHOD C	82.15 Lt C 44+60			c
	d																											284					36" APL	82.15 Lt C 44+60 to 194.33 Rt C 44+44			d
	e																																36" CSP FES	194.33 Rt C 44+44			e
	f																																RSP	194.33 Rt C 44+44			f
42	a	1																															REMOVE DI	29.08 Rt C 45+99	D-4	42	a
	b				139																												REMOVE DD	29.08 Rt C 45+99 to 133.17 Rt 45+11			b
		2			373						29						101	164								88		284			20		SHEET TOTAL			

2

2 REVISED PER ADDENDUM No. 2 DATED FEBRUARY 28, 2011

DRAINAGE QUANTITIES

DQ-13

STATE OF CALIFORNIA - DEPARTMENT OF TRANSPORTATION

Caltrans

CONSULTANT FUNCTIONAL SUPERVISOR: HAN-BIN LIANG

CALCULATED-DESIGNED BY: JENNIFER ABRAMS

CHECKED BY: CHRIS SEWELL

REVISED BY: J.ABRAMS

DATE REVISED: 06/09/10

LAST REVISION 06-09-10 DATE PLOTTED => 23-FEB-2011 TIME PLOTTED => 11:07

Dist	COUNTY	ROUTE	POST MILES TOTAL PROJECT	SHEET No.	TOTAL SHEETS
04	SCI	17	0.0/2.8	118	278

REGISTERED CIVIL ENGINEER 06/09/2010 DATE

9-7-10
PLANS APPROVAL DATE

REGISTERED PROFESSIONAL ENGINEER CHRISTOPHER SEWELL No. C 64807 Exp. 6/30/11 CIVIL STATE OF CALIFORNIA

THE STATE OF CALIFORNIA OR ITS OFFICERS OR AGENTS SHALL NOT BE RESPONSIBLE FOR THE ACCURACY OR COMPLETENESS OF SCANNED COPIES OF THIS PLAN SHEET.

WRECO
1243 ALPINE ROAD
SUITE 108
WALNUT CREEK, CA 94596

CALTRANS
111 GRAND AVENUE
OAKLAND, CA 94612

DRAINAGE QUANTITIES

DRAINAGE SYSTEM No. ⬡	DRAINAGE UNIT ◯	CSP FES 12" EA	CSP FES 18" EA	CSP FES 24" EA	CSP FES 30" EA	CSP FES 36" EA	48" WSP FT	MINOR Conc MINOR STRUCTURE CY	MINOR Conc Misc CONSTRUCTION CY	Conc BACKFILL (RAPID STRENGTH Conc) CY	Misc IRON AND STEEL LB	PIPE ANCHOR ASSEMBLY EA	ROCK SLOPE PROTECTION (BACKING No. 3, METHOD B) CY	ROCK SLOPE PROTECTION (BACKING No. 2, METHOD B) CY	ROCK SLOPE PROTECTION (FACING, METHOD B) CY	ROCK SLOPE PROTECTION (LIGHT, METHOD B) CY	ROCK SLOPE PROTECTION FABRIC SQYD	CULVERT CONTACT GROUTING CY	CONTACT GROUT PORTS EA	CHECKERED PLATE (N) EA	BOLTDOWN COVER (N) EA	24" TO 18" ECCENTRIC REDUCER Conc COLLAR EA	FRAME & COVER OR FRAME & GRATE (N) G2 MH EA	FRAME & COVER OR FRAME & GRATE (N) Maint. CLEANOUT (17½" Dia) EA	FRAME & COVER OR FRAME & GRATE (N) TYPE 24-12X EA	FRAME & COVER OR FRAME & GRATE (N) OS PLATE EA	PIPE JOINT CLASSIFICATION (N)	MAXIMUM COVER (N) LF	HEIGHT OF DI/MH (N) LF	DESCRIPTION	STATION	DRAINAGE PLAN No.	DRAINAGE SYSTEM No. ⬡	DRAINAGE UNIT ◯
35	f							1.61			239														1				4.5	GO DI	32.85 Lt C 41+25	D-4	35	f
	g																	1.12	~~56~~											18" APL	32.85 Lt C 41+25 to 39.58 Rt C 41+76			g
	h		1																											18" CSP FES	39.58 Rt C 41+76			h
	i												1.14				8.0													SUPPLEMENT RSP	39.58 Rt C 41+76			i
36	a																													REMOVE DI	118.59 Rt C 42+89	D-4	36	a
	b																													REMOVE DD	142.11 Rt C 43+08 to 221.17 Rt C 44+05			b
37	a							1.55			174															1			3.5	OS DI w/ 2 SIDE OPENINGS	118.59 Rt C 42+89	D-4	37	a
	b																										DD	2.00		18" APC (A)	118.59 Rt C 42+89 to 142.11 Rt C 43+08			b
	c							1.89			435												1						3.5	G2 MH	142.11 Rt C 43+08			c
	d											6 ~~2~~															DD	0.00		18" CSP DD w/ TEE w/ ANCHOR ASSEMBLIES	142.11 Rt C 43+08 to 219.24 Rt C 44+06			d
	e												1.58				12.7													RSP	219.24 Rt C 44+06			e
38	a																													REMOVE DD	28.22 Rt C 43+74 to 110.44 Rt C 43+69	D-4	38	a
39	a											6 ~~2~~															DD	2.50		12" CSP DD w/ TEE w/ ANCHOR ASSEMBLIES	28.22 Rt C 43+74 to 110.44 Rt C 43+69	D-4	39	a
	b												0.70				6.0													RSP	110.44 Rt C 43+69			b
40	a																													REMOVE DD	82.15 Lt C 44+60 to 48.19 Lt C 44+63	D-4	40	a
41	a							1.78			473														2				3.5	GDO DI	48.19 Lt C 44+63	D-4	41	a
	b											2															DD	2.30		18" CSP DD	48.19 Lt C 44+63 to 82.15 Lt C 44+60			b
	c																													REHAB RISER, METHOD C	82.15 Lt C 44+60			c
	d																	6.71	~~108~~											36" APL	82.15 Lt C 44+60 to 194.33 Rt C 44+44			d
	e					1																								36" CSP FES	194.33 Rt C 44+44			e
	f													12.35			37.2													RSP	194.33 Rt C 44+44			f
42	a																													REMOVE DI	29.08 Rt C 45+99	D-4	42	a
	b																													REMOVE DD	29.08 Rt C 45+99 to 133.17 Rt 45+11			b
			1			1		6.83			1321	14 ~~4~~	3.42	12.35			63.9	7.83	~~214~~				1		3	1				SHEET TOTAL				

2 2

2 REVISED PER ADDENDUM No. 2 DATED FEBRUARY 28, 2011

DRAINAGE QUANTITIES

DQ-14

STATE OF CALIFORNIA - DEPARTMENT OF TRANSPORTATION
Caltrans

CONSULTANT FUNCTIONAL SUPERVISOR: HAN-BIN LIANG

CALCULATED-DESIGNED BY: JENNIFER ABRAMS
CHECKED BY: CHRIS SEWELL

REVISED BY: J.ABRAMS
DATE REVISED: 06/09/10

LAST REVISION 06-09-10 | DATE PLOTTED => 23-FEB-2011 | TIME PLOTTED => 10:36

Dist	COUNTY	ROUTE	POST MILES TOTAL PROJECT	SHEET No.	TOTAL SHEETS
04	SCI	17	0.0/2.8	119	278

REGISTERED CIVIL ENGINEER 06/09/2010 DATE

9-7-10
PLANS APPROVAL DATE

REGISTERED PROFESSIONAL ENGINEER CHRISTOPHER SEWELL No. C 64807 Exp. 6/30/11 CIVIL STATE OF CALIFORNIA

THE STATE OF CALIFORNIA OR ITS OFFICERS OR AGENTS SHALL NOT BE RESPONSIBLE FOR THE ACCURACY OR COMPLETENESS OF SCANNED COPIES OF THIS PLAN SHEET.

WRECO
1243 ALPINE ROAD
SUITE 108
WALNUT CREEK, CA 94596

CALTRANS
111 GRAND AVENUE
OAKLAND, CA 94612

DRAINAGE QUANTITIES

DRAINAGE SYSTEM No.	DRAINAGE UNIT	REMOVE INLET (EA)	REMOVE MANHOLE (EA)	REMOVE CULVERT (FT)	REMOVE DD (FT)	REMOVE CONCRETE (CY)	REMOVE HEADWALL (EA)	ABANDON CULVERT (LF)	SAND BACKFILL (CY)	ALTERNATIVE PIPE CULVERT: 12" (TYPE A) (FT)	18" (TYPE A) (FT)	18" (TYPE B) (FT)	24" (TYPE A) (FT)	24" (TYPE B) (FT)	30" (TYPE A) (FT)	30" (TYPE B) (FT)	CSP DD: 12" (FT)	18" (FT)	24" (FT)	30" (FT)	36" (FT)	JACK 24" RCP (FT)	CSP: 42" (FT)	48" (FT)	18" CURED-IN-PLACE PIPELINER (CIPP) (FT)	18" ASP (FT)	ALTERNATIVE PIPELINER: 18" (FT)	24" (FT)	30" (FT)	36" (FT)	REHAB RISER: METHOD A (FT)	METHOD B (FT)	METHOD C (FT)	DESCRIPTION	STATION	DRAINAGE PLAN No.	DRAINAGE SYSTEM No.	DRAINAGE UNIT
43	a																																	G1 DI	27.07 Rt C 45+31	D-4	43	a
	b																127																	12" CSP DD w/ TEE w/ ANCHOR ASSEMBLIES	27.07 Rt C 45+31 to 133.17 Rt C 45+11			b
44	a	1																																REMOVE DI	45.55 Lt C 48+76	D-4	44	a
	b			25																														REMOVE Culv (PORTION)	45.55 Lt C 48+76 to 20.57 Lt C 48+69			b
	c							114	7.48																								ABANDON Culv	20.57 Lt C 48+69 to 89.02 Rt C 48+33			c
	d				26																													REMOVE DD	33.67 Rt C 48+78 to 58.09 Rt C 48+74			d
45	a																																	OS DI w/ 2 SIDE OPENINGS	45.55 Lt C 48+76	D-4	45	a
	b															76																		30" APC (B) w/ Conc Bkf	45.55 Lt C 48+76 to 32.10 Rt C 48+55			b
	c																																	G2 DI	32.10 Rt C 48+55			c
	d																		68															24" CSP DD w/ TEE w/ ANCHOR ASSEMBLIES	32.10 Rt C 48+55 to 89.02 Rt C 48+33			d
	e																																	RSP	89.02 Rt C 48+33			e
46	a																																	Maint CLEANOUT	1.31 Lt C 42+55	D-4	46	a
	b																									299								18" ASP	1.31 Lt C 42+55 to 1.72 Lt C 45+55			b
	c																																	Maint CLEANOUT	1.72 Lt C 45+55			c
	d																									307								18" ASP	1.72 Lt C 45+55 to 0.66 Lt C 48+63			d
	e																																	Maint CLEANOUT	0.66 Lt C 48+63			e
	f																									292								18" ASP	0.66 Lt C 48+63 to 0.67 Lt C 51+57			f
	g																																	G2 MH w/ BOLTDOWN COVER	0.67 Lt C 51+57			g
	h																									292								18" ASP	0.67 Lt C 51+57 to 2.84 Lt C 54+51			h
	i										25																							18" APC (A) w/ Conc Bkf	0.67 Lt C 51+57 to 29.04 Rt C 51+57			i
	j																																	GO DI	29.04 Rt C 51+57			j
	k										259																							18" APC (A) w/ Conc Bkf	29.04 Rt 51+57 to 29.55 Rt C 54+19	D-5		k
	l																																	G2 DI	29.55 Rt C 54+19			l
	m										44																							18" APC (A) w/ Conc Bkf	29.55 Rt C 54+19 to 2.84 Lt C 54+51			m
	n																																	G2 MH w/ BOLTDOWN COVER	2.84 Lt C 54+51			n
	o										40																							18" APC (A) w/ Conc Bkf	2.84 Lt C 54+51 to 30.09 Lt C 54+82			o
		1		25	26			114	7.48		368					76	127		68							1190								SHEET TOTAL				

2

2 REVISED PER ADDENDUM No. 2 DATED FEBRUARY 28, 2011

DRAINAGE QUANTITIES

DQ-15

STATE OF CALIFORNIA - DEPARTMENT OF TRANSPORTATION
Caltrans

CONSULTANT FUNCTIONAL SUPERVISOR: HAN-BIN LIANG
CALCULATED-DESIGNED BY: JENNIFER ABRAMS
CHECKED BY: CHRIS SEWELL
REVISED BY: J.ABRAMS
DATE REVISED: 06/09/10

LAST REVISION 06-09-10
DATE PLOTTED => 23-FEB-2011
TIME PLOTTED => 11:07

Dist	COUNTY	ROUTE	POST MILES TOTAL PROJECT	SHEET No.	TOTAL SHEETS
04	SCI	17	0.0/2.8	120	278

REGISTERED CIVIL ENGINEER 06/09/2010 DATE

9-7-10
PLANS APPROVAL DATE

REGISTERED PROFESSIONAL ENGINEER CHRISTOPHER SEWELL No. C 64807 Exp. 6/30/11 CIVIL STATE OF CALIFORNIA

THE STATE OF CALIFORNIA OR ITS OFFICERS OR AGENTS SHALL NOT BE RESPONSIBLE FOR THE ACCURACY OR COMPLETENESS OF SCANNED COPIES OF THIS PLAN SHEET.

WRECO
1243 ALPINE ROAD
SUITE 108
WALNUT CREEK, CA 94596

CALTRANS
111 GRAND AVENUE
OAKLAND, CA 94612

DRAINAGE QUANTITIES

DRAINAGE SYSTEM No.	DRAINAGE UNIT	CSP FES 12"	CSP FES 18"	CSP FES 24"	CSP FES 30"	CSP FES 36"	48" WSP	MINOR Conc: MINOR STRUCTURE	MINOR Conc: Misc CONSTRUCTION	Conc BACKFILL (RAPID STRENGTH Conc)	Misc IRON AND STEEL	PIPE ANCHOR ASSEMBLY	ROCK SLOPE PROTECTION (BACKING No. 3, METHOD B)	ROCK SLOPE PROTECTION (BACKING No. 2, METHOD B)	ROCK SLOPE PROTECTION (FACING, METHOD B)	ROCK SLOPE PROTECTION (LIGHT, METHOD B)	ROCK SLOPE PROTECTION FABRIC	CULVERT CONTACT GROUTING	~~CONTACT GROUT PORTS~~	CHECKERED PLATE (N)	BOLTDOWN COVER (N)	24" TO 18" ECCENTRIC REDUCER Conc COLLAR	FRAME & COVER OR FRAME & GRATE (N): G2 MH	FRAME & COVER OR FRAME & GRATE (N): Maint CLEANOUT (17½" Dia)	FRAME & COVER OR FRAME & GRATE (N): TYPE 24-12X	FRAME & COVER OR FRAME & GRATE (N): OS PLATE	PIPE JOINT CLASSIFICATION (N)	MAXIMUM COVER (N)	HEIGHT OF DI/MH (N)	DESCRIPTION	STATION	DRAINAGE PLAN No.	DRAINAGE SYSTEM No.	DRAINAGE UNIT
		EA	EA	EA	EA	EA	FT	CY	CY	CY	LB	EA	CY	CY	CY	CY	SQYD	CY	EA	EA	EA	EA	EA	EA	EA	EA		LF	LF					
43	a							1.06			239																	3.5	G1 DI	27.07 Rt C 45+31	D-4	43	a
	b											6 ~~2~~														DD	2.50		12" CSP DD w/ TEE w/ ANCHOR ASSEMBLIES	27.07 Rt C 45+31 to 133.17 Rt C 45+11			b
44	a																												REMOVE DI	45.55 Lt C 48+76	D-4	44	a
	b																												REMOVE Culv (PORTION)	45.55 Lt C 48+76 to 20.57 Lt C 48+69			b
	c																												ABANDON Culv	20.57 Lt C 48+69 to 89.02 Rt C 48+33			c
	d																												REMOVE DD	33.67 Rt C 48+78 to 58.09 Rt C 48+74			d
45	a							1.83			174														1			4.5	OS DI w/ 2 SIDE OPENINGS	45.55 Lt C 48+76	D-4	45	a
	b									29																PJ	5.00		30" APC (B) w/ Conc Bkf	45.55 Lt C 48+76 to 32.10 Rt C 48+55			b
	c							1.69			239													1				4.5	G2 DI	32.10 Rt C 48+55			c
	d											5 ~~2~~														DD	2.61		24" CSP DD w/ TEE w/ ANCHOR ASSEMBLIES	32.10 Rt C 48+55 to 89.02 Rt C 48+33			d
	e														7.06		25.6												RSP	89.02 Rt C 48+33			e
46	a							0.28			69										1		1					2.0	Maint CLEANOUT	1.31 Lt C 42+55	D-4	46	a
	b																										0.21		18" ASP	1.31 Lt C 42+55 to 1.72 Lt C 45+55			b
	c							0.28			69										1		1					2.0	Maint CLEANOUT	1.72 Lt C 45+55			c
	d																										0.21		18" ASP	1.72 Lt C 45+55 to 0.66 Lt C 48+63			d
	e							0.28			69										1		1					2.0	Maint CLEANOUT	0.66 Lt C 48+63			e
	f																										1.00		18" ASP	0.66 Lt C 48+63 to 0.67 Lt C 51+57			f
	g							1.44			435										1	1						3.5	G2 MH w/ BOLTDOWN COVER	0.67 Lt C 51+57			g
	h																										1.00		18" ASP	0.67 Lt C 51+57 to 2.84 Lt C 54+51			h
	i									9																PJ	2.00		18" APC (A) w/ Conc Bkf	0.67 Lt C 51+57 to 29.04 Rt C 51+57			i
	j							1.36			239													1				3.5	GO DI	29.04 Rt C 51+57			j
	k									97																PJ	3.00		18" APC (A) w/ Conc Bkf	29.04 Rt 51+57 to 29.55 Rt C 54+19	D-5		k
	l							1.44			239													1				3.5	G2 DI	29.55 Rt C 54+19			l
	m									16																PJ	2.00		18" APC (A) w/ Conc Bkf	29.55 Rt C 54+19 to 2.84 Lt C 54+51			m
	n							1.44			435										1	1						3.5	G2 MH w/ BOLTDOWN COVER	2.84 Lt C 54+51			n
	o									15																DD	2.50		18" APC (A) w/ Conc Bkf	2.84 Lt C 54+51 to 30.09 Lt C 54+82			o
								11.10		166	2207	11 ~~4~~			7.06		25.6				5		2	3	3	1			SHEET TOTAL				

2 2

2 REVISED PER ADDENDUM No. 2 DATED FEBRUARY 28, 2011

DRAINAGE QUANTITIES
DQ-16

STATE OF CALIFORNIA - DEPARTMENT OF TRANSPORTATION
Caltrans

CONSULTANT FUNCTIONAL SUPERVISOR: HAN-BIN LIANG
CALCULATED-DESIGNED BY: JENNIFER ABRAMS
CHECKED BY: CHRIS SEWELL
REVISED BY: J.ABRAMS
DATE REVISED: 06/09/10

LAST REVISION 06-09-10
DATE PLOTTED => 23-FEB-2011
TIME PLOTTED => 10:36

Dist	COUNTY	ROUTE	POST MILES TOTAL PROJECT	SHEET No.	TOTAL SHEETS
04	SCI	17	0.0/2.8	121	278

REGISTERED CIVIL ENGINEER DATE 06/09/2010

PLANS APPROVAL DATE 9-7-10

REGISTERED PROFESSIONAL ENGINEER CHRISTOPHER SEWELL No. C 64807 Exp. 6/30/11 CIVIL STATE OF CALIFORNIA

THE STATE OF CALIFORNIA OR ITS OFFICERS OR AGENTS SHALL NOT BE RESPONSIBLE FOR THE ACCURACY OR COMPLETENESS OF SCANNED COPIES OF THIS PLAN SHEET.

WRECO
1243 ALPINE ROAD
SUITE 108
WALNUT CREEK, CA 94596

CALTRANS
111 GRAND AVENUE
OAKLAND, CA 94612

DRAINAGE QUANTITIES

DRAINAGE SYSTEM No.	DRAINAGE UNIT	REMOVE INLET (EA)	REMOVE MANHOLE (EA)	REMOVE CULVERT (FT)	REMOVE DD (FT)	REMOVE CONCRETE (CY)	REMOVE HEADWALL (EA)	ABANDON CULVERT (LF)	SAND BACKFILL (CY)	ALTERNATIVE PIPE CULVERT 12" (TYPE A) (FT)	18" (TYPE A) (FT)	18" (TYPE B) (FT)	24" (TYPE A) (FT)	24" (TYPE B) (FT)	30" (TYPE A) (FT)	30" (TYPE B) (FT)	CSP DD 12" (FT)	18" (FT)	24" (FT)	30" (FT)	36" (FT)	JACK 24" RCP (FT)	CSP 42" (FT)	48" (FT)	18" ASP (FT)	ALTERNATIVE PIPELINER 18" (FT)	24" (FT)	30" (FT)	36" (FT)	REHAB RISER METHOD A (FT)	METHOD B (FT)	METHOD C (FT)	DESCRIPTION	STATION	DRAINAGE PLAN No.	DRAINAGE SYSTEM No.	DRAINAGE UNIT
46	p																																HEADWALL	41.88 Lt C 54+70	D-5	46	p
	q										15																						18" APC (A)	41.88 Lt C 54+70 to 30.09 Lt C 54+82			q
	r																																G2 DI	30.09 Lt C 54+82			r
	s												316																				24" APC (A)	30.09 Lt C 54+82 to 34.02 Lt C 58+17			s
	t																																OS DI w/ 1 SIDE OPENING	34.02 Lt C 58+17			t
	u										7																						18" APC (A)	34.02 Lt C 58+17 to 28.08 Lt C 58+21.29			u
	v																																GO DI	28.08 Lt C 58+21.29			v
	w												49																				24" APC (A)	34.02 Lt C 58+17 to 47.45 Lt C 58+68			w
	x																																HEADWALL	47.45 Lt C 58+68			x
	y																																Maint CLEANOUT	1.62 Rt C 54+63			y
	z																								198								18" ASP	1.62 Rt C 54+63 to 2.30 Rt C 56+62			z
	aa																																Maint CLEANOUT	2.30 Rt C 56+62			aa
	bb																								177								18" ASP	2.30 Rt C 56+62 to 2.84 Rt C 58+40			bb
	cc																																G2 MH w/ BOLTDOWN COVER	2.84 Rt C 58+40			cc
	dd										34																						18" APC (A) w/ Conc Bkf	2.84 Rt C 58+40 to 28.08 Lt C 58+21.29			dd
47	a	1																															REMOVE DI	29.55 Rt C 53+97	D-5	47	a
	b			19																													REMOVE Culv	29.69 Rt C 53+97 to 29.55 Rt C 54+19			b
	c	1																															REMOVE DI	29.55 Rt C 54+19			c
	d			86																													REMOVE Culv	29.55 Rt C 54+19 to 30.09 Lt C 54+82			d
	e	1																															REMOVE DI	30.09 Lt C 54+82			e
	f			316																													REMOVE Culv	30.09 Lt C 54+82 to 34.02 Lt C 58+17			f
	g	1																															REMOVE DI	34.02 Lt C 58+17			g
	h			49																													REMOVE Culv	34.02 Lt C 58+17 to 47.45 Lt C 58+68			h
	i						1																										REMOVE HW	47.45 Lt C 58+68			i
	j			8																													REMOVE Culv	31.83 Lt C 59+83 to 72.47 Lt C 59+31			j
48	a																								159								18" ASP	2.84 Rt C 58+40 to 3.19 Rt C 60+00	D-5	48	a
	b																																G2 MH w/ BOLTDOWN COVER	3.19 Rt C 60+00			b
		4		478			1				56		365												534								SHEET TOTAL				

2

2 REVISED PER ADDENDUM No. 2 DATED FEBRUARY 28, 2011

DRAINAGE QUANTITIES
DQ-17

STATE OF CALIFORNIA - DEPARTMENT OF TRANSPORTATION
Caltrans

CONSULTANT FUNCTIONAL SUPERVISOR: HAN-BIN LIANG
CALCULATED-DESIGNED BY: JENNIFER ABRAMS
CHECKED BY: CHRIS SEWELL
REVISED BY: J.ABRAMS
DATE REVISED: 06/09/10

LAST REVISION 06-09-10
DATE PLOTTED => 23-FEB-2011
TIME PLOTTED => 11:21

Dist	COUNTY	ROUTE	POST MILES TOTAL PROJECT	SHEET No.	TOTAL SHEETS
04	SCI	17	0.0/2.8	122	278

REGISTERED CIVIL ENGINEER 06/09/2010 DATE

9-7-10
PLANS APPROVAL DATE

REGISTERED PROFESSIONAL ENGINEER CHRISTOPHER SEWELL No. C 64807 Exp. 6/30/11 CIVIL STATE OF CALIFORNIA

THE STATE OF CALIFORNIA OR ITS OFFICERS OR AGENTS SHALL NOT BE RESPONSIBLE FOR THE ACCURACY OR COMPLETENESS OF SCANNED COPIES OF THIS PLAN SHEET.

WRECO
1243 ALPINE ROAD
SUITE 108
WALNUT CREEK, CA 94596

CALTRANS
111 GRAND AVENUE
OAKLAND, CA 94612

DRAINAGE QUANTITIES

DRAINAGE SYSTEM No.	DRAINAGE UNIT	CSP FES 12"	CSP FES 18"	CSP FES 24"	CSP FES 30"	CSP FES 36"	48" WSP	MINOR Conc MINOR STRUCTURE	MINOR Conc Misc CONSTRUCTION	Conc BACKFILL (RAPID STRENGTH Conc)	Misc IRON AND STEEL	PIPE ANCHOR ASSEMBLY	ROCK SLOPE PROTECTION (BACKING No. 3, METHOD B)	ROCK SLOPE PROTECTION (BACKING No. 2, METHOD B)	ROCK SLOPE PROTECTION (FACING, METHOD B)	ROCK SLOPE PROTECTION (LIGHT, METHOD B)	ROCK SLOPE PROTECTION FABRIC	CULVERT CONTACT GROUTING	CONTACT GROUT PORTS	CHECKERED PLATE (N)	BOLTDOWN COVER (N)	24" TO 18" ECCENTRIC REDUCER Conc COLLAR	FRAME & COVER OR FRAME & GRATE (N) G2 MH	FRAME & COVER OR FRAME & GRATE (N) Maint. CLEANOUT (17½" Dia)	FRAME & COVER OR FRAME & GRATE (N) TYPE 24-12X	FRAME & COVER OR FRAME & GRATE (N) OS PLATE	PIPE JOINT CLASSIFICATION (N)	MAXIMUM COVER (N)	HEIGHT OF DI/MH (N)	DESCRIPTION	STATION	DRAINAGE PLAN No.	DRAINAGE SYSTEM No.	DRAINAGE UNIT
		EA	EA	EA	EA	EA	FT	CY	CY	CY	LB	EA	CY	CY	CY	CY	SQYD	CY	EA	EA	EA	EA	EA	EA	EA	EA		LF	LF					
46	p							0.91																					HEADWALL	41.88 Lt C 54+70	D-5	46	p
	q																									DD	2.00		18" APC (A)	41.88 Lt C 54+70 to 30.09 Lt C 54+82			q
	r							1.57			239													1				4.0	G2 DI	30.09 Lt C 54+82			r
	s																									PJ	2.00		24" APC (A)	30.09 Lt C 54+82 to 34.02 Lt C 58+17			s
	t							1.72			174														1			4.1	OS DI w/ 1 SIDE OPENING	34.02 Lt C 58+17			t
	u																									PJ	2.00		18" APC (A)	34.02 Lt C 58+17 to 28.08 Lt C 58+21.29			u
	v							1.44			239													1				3.8	GO DI	28.08 Lt C 58+21.29			v
	w																									PJ	2.40		24" APC (A)	34.02 Lt C 58+17 to 47.45 Lt C 58+68			w
	x							1.20																					HEADWALL	47.45 Lt C 58+68			x
	y							0.28			69										1			1				2.0	Maint CLEANOUT	1.62 Rt C 54+63			y
	z																										0.21		18" ASP	1.62 Rt C 54+63 to 2.30 Rt C 56+62			z
	aa							0.28			69										1			1				2.0	Maint CLEANOUT	2.30 Rt C 56+62			aa
	bb																										1.00		18" ASP	2.30 Rt C 56+62 to 2.84 Rt C 58+40			bb
	cc							1.44			435										1		1					3.5	G2 MH w/ BOLTDOWN COVER	2.84 Rt C 58+40			cc
	dd									13																PJ	2.00		18" APC (A) w/ Conc Bkf	2.84 Rt C 58+40 to 28.08 Lt C 58+21.29			dd
47	a																												REMOVE DI	29.55 Rt C 53+97	D-5	47	a
	b																												REMOVE Culv	29.69 Rt C 53+97 to 29.55 Rt C 54+19			b
	c																												REMOVE DI	29.55 Rt C 54+19			c
	d																												REMOVE Culv	29.55 Rt C 54+19 to 30.09 Lt C 54+82			d
	e																												REMOVE DI	30.09 Lt C 54+82			e
	f																												REMOVE Culv	30.09 Lt C 54+82 to 34.02 Lt C 58+17			f
	g																												REMOVE DI	34.02 Lt C 58+17			g
	h																												REMOVE Culv	34.02 Lt C 58+17 to 47.45 Lt C 58+68			h
	i																												REMOVE HW	47.45 Lt C 58+68			i
	j																												REMOVE Culv	31.83 Lt C 59+83 to 72.47 Lt C 59+31			j
48	a																										1.80		18" ASP	2.84 Rt C 58+40 to 3.19 Rt C 60+00	D-5	48	a
	b							1.44			435										1		1					3.5	G2 MH w/ BOLTDOWN COVER	3.19 Rt C 60+00			b
								10.28		13	1660										4		2	2	2	1			SHEET TOTAL				

2

2 REVISED PER ADDENDUM No. 2 DATED FEBRUARY 28, 2011

DRAINAGE QUANTITIES

DQ-18

REVISED BY	DATE REVISED
J.ABRAMS	06/09/10

JENNIFER ABRAMS — CHRIS SEWELL — CALCULATED-DESIGNED BY — CHECKED BY

CONSULTANT FUNCTIONAL SUPERVISOR: HAN-BIN LIANG

STATE OF CALIFORNIA - DEPARTMENT OF TRANSPORTATION

Caltrans

LAST REVISION 06-09-10 | DATE PLOTTED => 23-FEB-2011 | TIME PLOTTED => 10:36

Dist	COUNTY	ROUTE	POST MILES TOTAL PROJECT	SHEET No.	TOTAL SHEETS
04	SCI	17	0.0/2.8	123	278

REGISTERED CIVIL ENGINEER 06/09/2010 DATE

9-7-10
PLANS APPROVAL DATE

REGISTERED PROFESSIONAL ENGINEER CHRISTOPHER SEWELL No. C 64807 Exp. 6/30/11 CIVIL STATE OF CALIFORNIA

THE STATE OF CALIFORNIA OR ITS OFFICERS OR AGENTS SHALL NOT BE RESPONSIBLE FOR THE ACCURACY OR COMPLETENESS OF SCANNED COPIES OF THIS PLAN SHEET.

WRECO
1243 ALPINE ROAD
SUITE 108
WALNUT CREEK, CA 94596

CALTRANS
111 GRAND AVENUE
OAKLAND, CA 94612

DRAINAGE QUANTITIES

DRAINAGE SYSTEM No.	DRAINAGE UNIT	REMOVE INLET	REMOVE MANHOLE	REMOVE CULVERT	REMOVE DD	REMOVE CONCRETE	REMOVE HEADWALL	ABANDON CULVERT	SAND BACKFILL	ALTERNATIVE PIPE CULVERT 12" (TYPE A)	18" (TYPE A)	18" (TYPE B)	24" (TYPE A)	24" (TYPE B)	30" (TYPE A)	30" (TYPE B)	CSP DD 12"	18"	24"	30"	36"	JACK 24" RCP	CSP 42"	48"	18" ASP	ALTERNATIVE PIPELINER 18"	24"	30"	36"	REHAB RISER METHOD A	METHOD B	METHOD C	DESCRIPTION	STATION	DRAINAGE PLAN No.	DRAINAGE SYSTEM No.	DRAINAGE UNIT
		EA	EA	FT	FT	CY	EA	LF	CY	FT	FT	FT	FT	FT	FT	FT	FT	FT	FT	FT	FT	FT	FT	FT	FT	FT	FT	FT	FT	FT	FT	FT					
48	c										40																						18" APC (A) w/ Conc Bkf	3.19 Rt C 60+00 to 31.83 Lt C 59+83	D-5	48	c
	d																																GO DI	31.83 Lt C 59+83			d
	e																55																12" CSP DD w/ TEE w/ ANCHOR ASSEMBLIES	31.83 Lt C 59+83 to 72.47 Lt C 59+31			e
	f																																RSP	72.47 Lt C 59+31			f
49	a	1																															REMOVE DI	104.64 Rt C 60+00	D-5	49	a
	b			54																													REMOVE Culv	104.64 Rt C 60+00 to 137.34 Rt C 60+38			b
50	a																																GO DI	104.64 Rt C 60+00	D-5	50	a
	b										54																						18" APC (A)	104.64 Rt C 60+00 to 137.34 Rt C 60+38			b
	c																																18" CSP FES	137.34 Rt C 60+38			c
51	a			41																													REMOVE Culv	172.58 Lt C 61+96 to 168.46 Lt C 61+37	D-5	51	a
	b	1																															REMOVE DI	168.46 Lt C 61+37			b
	c			112																													REMOVE Culv	168.46 Lt C 61+37 to 61.74 Lt C 60+98			c
	d		1																														REMOVE MH	61.74 Lt C 60+98			d
	e							128	14.89																								ABANDON Culv	61.74 Rt C 60+98 to 67.12 Rt C 60+91			e
	f			92																													REMOVE Culv	67.12 Rt C 60+91 to 75.59 Rt C 60+86			f
	g	1																															REMOVE DI	82.23 Lt C 63+03			g
	h			66																													REMOVE Culv	68.88 Lt C 62+28 to 82.23 Lt C 63+03			h
	i	1																															REMOVE DI	68.88 Lt C 62+28			i
	j			58																													REMOVE Culv	68.88 Lt C 62+28 to 59.94 Lt C 61+63			j
	k			30																													REMOVE Culv	59.94 Lt C 61+63 to 30.60 Lt C 61+61			k
52	a																																OS DI w/ 2 SIDE OPENINGS	172.58 Lt C 61+96	D-5	52	a
	b										41																						18" APC (A)	172.58 Lt C 61+96 to 168.46 Lt C 61+37			b
	c																																OS DI w/ 2 SIDE OPENINGS	168.46 Lt C 61+37			c
		4	1	453				128	14.89		135						55																SHEET TOTAL				

2

2 REVISED PER ADDENDUM No. 2 DATED FEBRUARY 28, 2011

DRAINAGE QUANTITIES

DQ-19

STATE OF CALIFORNIA - DEPARTMENT OF TRANSPORTATION
Caltrans

CONSULTANT FUNCTIONAL SUPERVISOR: HAN-BIN LIANG

CALCULATED-DESIGNED BY: JENNIFER ABRAMS
CHECKED BY: CHRIS SEWELL

REVISED BY: J.ABRAMS
DATE REVISED: 06/09/10

LAST REVISION 06-09-10 | DATE PLOTTED => 23-FEB-2011 | TIME PLOTTED => 11:21

Dist	COUNTY	ROUTE	POST MILES TOTAL PROJECT	SHEET No.	TOTAL SHEETS
04	SCI	17	0.0/2.8	124	278

REGISTERED CIVIL ENGINEER 06/09/2010 DATE

9-7-10
PLANS APPROVAL DATE

REGISTERED PROFESSIONAL ENGINEER CHRISTOPHER SEWELL No. C 64807 Exp. 6/30/11 CIVIL STATE OF CALIFORNIA

THE STATE OF CALIFORNIA OR ITS OFFICERS OR AGENTS SHALL NOT BE RESPONSIBLE FOR THE ACCURACY OR COMPLETENESS OF SCANNED COPIES OF THIS PLAN SHEET.

WRECO
1243 ALPINE ROAD
SUITE 108
WALNUT CREEK, CA 94596

CALTRANS
111 GRAND AVENUE
OAKLAND, CA 94612

DRAINAGE QUANTITIES

DRAINAGE SYSTEM No. ⬡	DRAINAGE UNIT ◯	CSP FES 12"	CSP FES 18"	CSP FES 24"	CSP FES 30"	CSP FES 36"	48" WSP	MINOR Conc: MINOR STRUCTURE	MINOR Conc: Misc CONSTRUCTION	Conc BACKFILL (RAPID STRENGTH Conc)	Misc IRON AND STEEL	PIPE ANCHOR ASSEMBLY	ROCK SLOPE PROTECTION (BACKING No. 3, METHOD B)	ROCK SLOPE PROTECTION (BACKING No. 2, METHOD B)	ROCK SLOPE PROTECTION (FACING, METHOD B)	ROCK SLOPE PROTECTION (LIGHT, METHOD B)	ROCK SLOPE PROTECTION FABRIC	CULVERT CONTACT GROUTING	~~CONTACT GROUT PORTS~~	CHECKERED PLATE (N)	BOLTDOWN COVER (N)	24" TO 18" ECCENTRIC REDUCER Conc COLLAR	FRAME & COVER OR FRAME & GRATE (N): G2 MH	FRAME & COVER OR FRAME & GRATE (N): Maint CLEANOUT (17½" Dia)	FRAME & COVER OR FRAME & GRATE (N): TYPE 24-12X	FRAME & COVER OR FRAME & GRATE (N): OS PLATE	PIPE JOINT CLASSIFICATION (N)	MAXIMUM COVER (N)	HEIGHT OF DI/MH (N)	DESCRIPTION	STATION	DRAINAGE PLAN No.	DRAINAGE SYSTEM No. ⬡	DRAINAGE UNIT ◯
		EA	EA	EA	EA	EA	FT	CY	CY	CY	LB	EA	CY	CY	CY	CY	SQYD	CY	EA	EA	EA	EA	EA	EA	EA	EA		LF	LF					
48	c									15																	PJ	2.00		18" APC (A) w/ Conc Bkf	3.19 Rt C 60+00 to 31.83 Lt C 59+83	D-5	48	c
	d							1.36			239														1				3.5	GO DI	31.83 Lt C 59+83			d
	e											5 ~~2~~															DD	2.50		12" CSP DD w/ TEE w/ ANCHOR ASSEMBLIES	31.83 Lt C 59+83 to 72.47 Lt C 59+31			e
	f												0.70				6.0													RSP	72.47 Lt C 59+31			f
49	a																													REMOVE DI	104.64 Rt C 60+00	D-5	49	a
	b																													REMOVE Culv	104.64 Rt C 60+00 to 137.34 Rt C 60+38			b
50	a							1.90			239														1				5.7	GO DI	104.64 Rt C 60+00	D-5	50	a
	b																										SJ	2.00		18" APC (A)	104.64 Rt C 60+00 to 137.34 Rt C 60+38			b
	c		1																											18" CSP FES	137.34 Rt C 60+38			c
51	a																													REMOVE Culv	172.58 Lt C 61+96 to 168.46 Lt C 61+37	D-5	51	a
	b																													REMOVE DI	168.46 Lt C 61+37			b
	c																													REMOVE Culv	168.46 Lt C 61+37 to 61.74 Lt C 60+98			c
	d																													REMOVE MH	61.74 Lt C 60+98			d
	e																													ABANDON Culv	61.74 Rt C 60+98 to 67.12 Rt C 60+91			e
	f																													REMOVE Culv	67.12 Rt C 60+91 to 75.59 Rt C 60+86			f
	g																													REMOVE DI	82.23 Lt C 63+03			g
	h																													REMOVE Culv	68.88 Lt C 62+28 to 82.23 Lt C 63+03			h
	i																													REMOVE DI	68.88 Lt C 62+28			i
	j																													REMOVE Culv	68.88 Lt C 62+28 to 59.94 Lt C 61+63			j
	k																													REMOVE Culv	59.94 Lt C 61+63 to 30.60 Lt C 61+61			k
52	a							1.55			174															1			3.5	OS DI w/ 2 SIDE OPENINGS	172.58 Lt C 61+96	D-5	52	a
	b																										PJ	2.00		18" APC (A)	172.58 Lt C 61+96 to 168.46 Lt C 61+37			b
	c							1.55			174															1			3.5	OS DI w/ 2 SIDE OPENINGS	168.46 Lt C 61+37			c
			1					6.36		15	826	5 ~~2~~	0.70				6.0								2	2				SHEET TOTAL				

2 2

2 **REVISED PER ADDENDUM No. 2 DATED FEBRUARY 28, 2011**

DRAINAGE QUANTITIES
DQ-20

STATE OF CALIFORNIA - DEPARTMENT OF TRANSPORTATION
Caltrans

CONSULTANT FUNCTIONAL SUPERVISOR: HAN-BIN LIANG
CALCULATED-DESIGNED BY: JENNIFER ABRAMS
CHECKED BY: CHRIS SEWELL
REVISED BY: J.ABRAMS
DATE REVISED: 06/09/10

LAST REVISION 06-09-10 | DATE PLOTTED => 23-FEB-2011 | TIME PLOTTED => 10:36

Dist	COUNTY	ROUTE	POST MILES TOTAL PROJECT	SHEET No.	TOTAL SHEETS
04	SCI	17	0.0/2.8	125	278

REGISTERED CIVIL ENGINEER 06/09/2010 DATE

9-7-10
PLANS APPROVAL DATE

REGISTERED PROFESSIONAL ENGINEER CHRISTOPHER SEWELL No. C 64807 Exp. 6/30/11 CIVIL STATE OF CALIFORNIA

THE STATE OF CALIFORNIA OR ITS OFFICERS OR AGENTS SHALL NOT BE RESPONSIBLE FOR THE ACCURACY OR COMPLETENESS OF SCANNED COPIES OF THIS PLAN SHEET.

WRECO
1243 ALPINE ROAD
SUITE 108
WALNUT CREEK, CA 94596

CALTRANS
111 GRAND AVENUE
OAKLAND, CA 94612

DRAINAGE QUANTITIES

DRAINAGE SYSTEM No.	DRAINAGE UNIT	REMOVE INLET	REMOVE MANHOLE	REMOVE CULVERT	REMOVE DD	REMOVE CONCRETE	REMOVE HEADWALL	ABANDON CULVERT	SAND BACKFILL	ALTERNATIVE PIPE CULVERT 12" (TYPE A)	18" (TYPE A)	18" (TYPE B)	24" (TYPE A)	24" (TYPE B)	30" (TYPE A)	30" (TYPE B)	CSP DD 12"	18"	24"	30"	36"	JACK 24" RCP	CSP 42"	48"	18" ASP	ALTERNATIVE PIPELINER 18"	24"	30"	36"	REHAB RISER METHOD A	METHOD B	METHOD C	DESCRIPTION	STATION	DRAINAGE PLAN No.	DRAINAGE SYSTEM No.	DRAINAGE UNIT
		EA	EA	FT	FT	CY	EA	LF	CY	FT	FT	FT	FT	FT	FT	FT	FT	FT	FT	FT	FT	FT	FT	FT	FT	FT	FT	FT	FT	FT	FT	FT					
52	d										112																						18" APC (A)	168.46 Lt C 61+37 to 61.70 Lt C 60+90	D-5	52	d
	e																																G2 DI	61.70 Lt C 60+90			e
	f										135																						18" APC (A)	61.70 Lt C 60+90 to 75.59 Rt C 60+86			f
	g																																GO DI	75.59 Rt C 60+86			g
	h										77																						18" APC (A)	75.59 Rt C 60+86 to 141.38 Rt C 60+48			h
	i																																18" CSP FES	141.38 Rt C 60+48			i
	j																																RSP	141.38 Rt C 60+48			j
	k																																G2 DI	82.23 Lt C 63+03			k
	l										66																						18" APC (A)	68.88 Lt C 62+28 to 82.23 Lt C 63+03			l
	m																																G2 DI	68.88 Lt C 62+28			m
	n										58																						18" APC (A)	59.94 Lt C 61+63 to 68.88 Lt C 62+28			n
	o																																G2 MH	59.94 Lt C 61+63			o
	p										65																						18" APC (A)	59.94 Lt C 61+63 to 61.70 Lt C 60+90			p
	q										30																						18" APC (A)	30.60 Lt C 61+61.00 to 59.94 Lt C 61+63			q
	r																																GO DI	30.60 Lt C 61+61.00			r
53	a	1																															REMOVE DI	69.46 Rt C 65+51	D-6	53	a
	b			59																													REMOVE Culv	69.46 Rt C 65+51 to 112.57 Rt C 65+89			b
	c	1																															REMOVE DI	112.57 Rt C 65+89			c
	d			103																													REMOVE Culv	112.57 Rt C 65+89 to 205.81 Rt C 65+90	D-5		d
	e	1																															REMOVE DI	205.81 Rt C 65+90			e
	f			21																													REMOVE Culv	205.81 Rt C 65+90 to 228.09 Rt C 65+89			f
54	a																																GO DI	69.46 Rt C 65+51	D-6	54	a
	b										59																						18" APC (A)	69.46 Rt C 65+51 to 112.57 Rt C 65+89			b
	c																																G2 MH	112.57 Rt C 65+89			c
	d																103																12" CSP DD	112.57 Rt C 65+89 to 205.81 Rt C 65+90			d
	e																																OS DI w/ 2 SIDE OPENINGS	205.81 Rt C 65+90			e
	f										21																						18" APC (A)	205.81 Rt C 65+90 to 228.09 Rt C 65+89			f
		3		183							623						103																SHEET TOTAL				

2

2 REVISED PER ADDENDUM No. 2 DATED FEBRUARY 28, 2011

DRAINAGE QUANTITIES

DQ-21

STATE OF CALIFORNIA - DEPARTMENT OF TRANSPORTATION
Caltrans

CONSULTANT FUNCTIONAL SUPERVISOR: HAN-BIN LIANG

CALCULATED-DESIGNED BY: JENNIFER ABRAMS
CHECKED BY: CHRIS SEWELL

REVISED BY: J.ABRAMS
DATE REVISED: 06/09/10

LAST REVISION 06-09-10
DATE PLOTTED => 23-FEB-2011
TIME PLOTTED => 17:32

Dist	COUNTY	ROUTE	POST MILES TOTAL PROJECT	SHEET No.	TOTAL SHEETS
04	SCI	17	0.0/2.8	126	278

REGISTERED CIVIL ENGINEER — DATE 06/09/2010

9-7-10
PLANS APPROVAL DATE

REGISTERED PROFESSIONAL ENGINEER — CHRISTOPHER SEWELL — No. C 64807 — Exp. 6/30/11 — CIVIL — STATE OF CALIFORNIA

THE STATE OF CALIFORNIA OR ITS OFFICERS OR AGENTS SHALL NOT BE RESPONSIBLE FOR THE ACCURACY OR COMPLETENESS OF SCANNED COPIES OF THIS PLAN SHEET.

WRECO
1243 ALPINE ROAD
SUITE 108
WALNUT CREEK, CA 94596

CALTRANS
111 GRAND AVENUE
OAKLAND, CA 94612

DRAINAGE QUANTITIES

DRAINAGE SYSTEM No.	DRAINAGE UNIT	CSP FES 12" EA	CSP FES 18" EA	CSP FES 24" EA	CSP FES 30" EA	CSP FES 36" EA	48" WSP FT	MINOR Conc MINOR STRUCTURE CY	MINOR Conc Misc CONSTRUCTION CY	Conc BACKFILL (RAPID STRENGTH Conc) CY	Misc IRON AND STEEL LB	PIPE ANCHOR ASSEMBLY EA	ROCK SLOPE PROTECTION (BACKING No. 3, METHOD B) CY	ROCK SLOPE PROTECTION (BACKING No. 2, METHOD B) CY	ROCK SLOPE PROTECTION (FACING, METHOD B) CY	ROCK SLOPE PROTECTION (LIGHT, METHOD B) CY	ROCK SLOPE PROTECTION FABRIC SQYD	CULVERT CONTACT GROUTING CY	~~CONTACT GROUT PORTS EA~~	CHECKERED PLATE (N) EA	BOLTDOWN COVER (N) EA	24" TO 18" ECCENTRIC REDUCER Conc COLLAR EA	FRAME & COVER OR FRAME & GRATE (N) G2 MH EA	FRAME & COVER OR FRAME & GRATE (N) Maint. CLEANOUT (17½" Dia) EA	FRAME & COVER OR FRAME & GRATE (N) TYPE 24-12X EA	FRAME & COVER OR FRAME & GRATE (N) OS PLATE EA	PIPE JOINT CLASSIFICATION (N)	MAXIMUM COVER (N) LF	HEIGHT OF DI/MH (N) LF	DESCRIPTION	STATION	DRAINAGE PLAN No.	DRAINAGE SYSTEM No.	DRAINAGE UNIT
52	d																										SJ	2.00		18" APC (A)	168.46 Lt C 61+37 to 61.70 Lt C 60+90	D-5	52	d
	e							1.46			239														1				3.6	G2 DI	61.70 Lt C 60+90			e
	f																										SJ	2.50		18" APC (A)	61.70 Lt C 60+90 to 75.59 Rt C 60+86			f
	g							1.39			239														1				3.6	GO DI	75.59 Rt C 60+86			g
	h																										SJ	2.30		18" APC (A)	75.59 Rt C 60+86 to 141.38 Rt C 60+48			h
	i		1											1.96			9.6													18" CSP FES	141.38 Rt C 60+48			i
	j																													RSP	141.38 Rt C 60+48			j
	k							1.44			239														1				3.5	G2 DI	82.23 Lt C 63+03			k
	l																										SJ	3.00		18" APC (A)	68.88 Lt C 62+28 to 82.23 Lt C 63+03			l
	m							1.46			239														1				3.6	G2 DI	68.88 Lt C 62+28			m
	n																										PJ	2.90		18" APC (A)	59.94 Lt C 61+63 to 68.88 Lt C 62+28			n
	o							1.93			435												1						3.6	G2 MH	59.94 Lt C 61+63			o
	p																										PJ	2.80		18" APC (A)	59.94 Lt C 61+63 to 61.70 Lt C 60+90			p
	q																													18" APC (A)	30.60 Lt C 61+61.00 to 59.94 Lt C 61+63			q
	r							1.36			239														1				3.5	GO DI	30.60 Lt C 61+61.00			r
53	a																													REMOVE DI	69.46 Rt C 65+51	D-6	53	a
	b																													REMOVE Culv	69.46 Rt C 65+51 to 112.57 Rt C 65+89			b
	c																													REMOVE DI	112.57 Rt C 65+89			c
	d																													REMOVE Culv	112.57 Rt C 65+89 to 205.81 Rt C 65+90	D-5		d
	e																													REMOVE DI	205.81 Rt C 65+90			e
	f																													REMOVE Culv	205.81 Rt C 65+90 to 228.09 Rt C 65+89			f
54	a							1.36			239														1				3.5	GO DI	69.46 Rt C 65+51	D-6	54	a
	b																										DD	2.00		18" APC (A)	69.46 Rt C 65+51 to 112.57 Rt C 65+89			b
	c							1.93			435												1						3.6	G2 MH	112.57 Rt C 65+89			c
	d											4															DD	2.00		12" CSP DD	112.57 Rt C 65+89 to 205.81 Rt C 65+90			d
	e							1.58			174															1			3.6	OS DI w/ 2 SIDE OPENINGS	205.81 Rt C 65+90			e
	f																										PJ	2.80		18" APC (A)	205.81 Rt C 65+90 to 228.09 Rt C 65+89			f
			1					13.91			2478	4		1.96			9.6						2		6	1				SHEET TOTAL				

2 2

2 REVISED PER ADDENDUM No. 2 DATED FEBRUARY 28, 2011

DRAINAGE QUANTITIES

DQ-22

STATE OF CALIFORNIA - DEPARTMENT OF TRANSPORTATION
Caltrans

CONSULTANT FUNCTIONAL SUPERVISOR: HAN-BIN LIANG
CALCULATED-DESIGNED BY: JENNIFER ABRAMS
CHECKED BY: CHRIS SEWELL
REVISED BY: J.ABRAMS
DATE REVISED: 06/09/10

LAST REVISION DATE PLOTTED => 23-FEB-2011
TIME PLOTTED => 10:36
06-09-10

Dist	COUNTY	ROUTE	POST MILES TOTAL PROJECT	SHEET No.	TOTAL SHEETS
04	SCI	17	0.0/2.8	127	278

REGISTERED CIVIL ENGINEER 06/09/2010 DATE

9-7-10
PLANS APPROVAL DATE

REGISTERED PROFESSIONAL ENGINEER CHRISTOPHER SEWELL No. C 64807 Exp. 6/30/11 CIVIL STATE OF CALIFORNIA

THE STATE OF CALIFORNIA OR ITS OFFICERS OR AGENTS SHALL NOT BE RESPONSIBLE FOR THE ACCURACY OR COMPLETENESS OF SCANNED COPIES OF THIS PLAN SHEET.

WRECO
1243 ALPINE ROAD
SUITE 108
WALNUT CREEK, CA 94596

CALTRANS
111 GRAND AVENUE
OAKLAND, CA 94612

DRAINAGE QUANTITIES

DRAINAGE SYSTEM No.	DRAINAGE UNIT	REMOVE INLET (EA)	REMOVE MANHOLE (EA)	REMOVE CULVERT (FT)	REMOVE DD (FT)	REMOVE CONCRETE (CY)	REMOVE HEADWALL (EA)	ABANDON CULVERT (LF)	SAND BACKFILL (CY)	ALTERNATIVE PIPE CULVERT 12" (TYPE A) (FT)	18" (TYPE A) (FT)	18" (TYPE B) (FT)	24" (TYPE A) (FT)	24" (TYPE B) (FT)	30" (TYPE A) (FT)	30" (TYPE B) (FT)	CSP DD 12" (FT)	18" (FT)	24" (FT)	30" (FT)	36" (FT)	JACK 24" RCP (FT)	CSP 42" (FT)	48" (FT)	18" ASP (FT)	ALTERNATIVE PIPELINER 18" (FT)	24" (FT)	30" (FT)	36" (FT)	REHAB RISER METHOD A (FT)	METHOD B (FT)	METHOD C (FT)	DESCRIPTION	STATION	DRAINAGE PLAN No.	DRAINAGE SYSTEM No.	DRAINAGE UNIT
55	a																																Maint CLEANOUT	3.31 Rt C 61+50	D-5	55	a
	b																								299								18" ASP	3.31 Rt C 61+50 to 2.42 Rt C 64+50			b
	c																																Maint CLEANOUT	2.42 Rt C 64+50			c
	d																								259								18" ASP	2.42 Rt C 64+50 to 1.29 Rt C 67+10			d
	e																																Maint CLEANOUT	1.29 Rt C 67+10	D-6		e
	f																								281								18" ASP	1.29 Rt C 67+10 to 1.80 Rt 69+92			f
	g																																GO DI	30.15 Lt C 69+81			g
	h												32																				24" APC (A) w/ Conc Bkf	30.15 Lt C 69+81 to 1.80 Rt C 69+92			h
	i																																G2 MH w/ BOLTDOWN COVER	1.80 Rt C 69+92			i
	j												27																				24" APC (A) w/ Conc Bkf	1.80 Rt C 69+92 to 29.27 Rt C 70+09			j
	k																																GO DI	29.27 Rt C 70+09			k
	l												23																				24" APC (A)	49.12 Rt C 70+08 to 29.27 Rt C 70+09			l
	m																																CHECKERED PLATE	49.12 Rt C 70+08			m
	n																																24" to 18" ECCENTRIC REDUCER w/ Conc COLLAR	82.99 Rt C 70+69.79			n
56	a	1																															REMOVE DI	30.15 Lt C 69+81	D-6	56	a
	b			32																													REMOVE Culv (PORTION)	30.15 Lt C 69+81 to 5.45 Lt C 69+89			b
	c							51	5.93																								ABANDON Culv	5.45 Lt C 69+89 to 49.12 Rt C 70+08			c
	d				30																												REMOVE DD	29.02 Rt C 69+90 to 79.12 Rt C 70+08			d
	e			2																													REMOVE Culv (PORTION)	48.64 Rt C 70+07 to 46.75 Rt C 70.07			e
57	a	1																															REMOVE DI	48.44 Lt C 72+50	D-6	57	a
58	a																																OS DI w/ 2 SIDE OPENINGS	48.44 Lt C 72+50	D-6	58	a
	b																										166						24" APL	48.44 Lt C 72+50 to 58.71 Rt C 71+21			b
	c																																CHECKERED PLATE	58.71 Rt C 71+21			c
59	a	1																															REMOVE DI	30.62 Rt C 72+70	D-6	59	a
	b			150																													REMOVE Culv	30.62 Rt C 72+70 to 46.13 Rt 71+84			b
60	a			107																													REMOVE Culv	47.69 Rt C 72+70 to 154.21 Rt C 72+69	D-6	60	a
		3		291	30			51	5.93				82												839		166						SHEET TOTAL				

2

2 REVISED PER ADDENDUM No. 2 DATED FEBRUARY 28, 2011

DRAINAGE QUANTITIES

DQ-23

STATE OF CALIFORNIA - DEPARTMENT OF TRANSPORTATION
Caltrans

CONSULTANT FUNCTIONAL SUPERVISOR: HAN-BIN LIANG
CALCULATED-DESIGNED BY: JENNIFER ABRAMS
CHECKED BY: CHRIS SEWELL
REVISED BY: J.ABRAMS
DATE REVISED: 06/09/10

LAST REVISION 06-09-10
DATE PLOTTED => 23-FEB-2011
TIME PLOTTED => 17:32

Dist	COUNTY	ROUTE	POST MILES TOTAL PROJECT	SHEET No.	TOTAL SHEETS
04	SCI	17	0.0/2.8	128	278

REGISTERED CIVIL ENGINEER 06/09/2010 DATE

9-7-10
PLANS APPROVAL DATE

REGISTERED PROFESSIONAL ENGINEER CHRISTOPHER SEWELL No. C 64807 Exp. 6/30/11 CIVIL STATE OF CALIFORNIA

THE STATE OF CALIFORNIA OR ITS OFFICERS OR AGENTS SHALL NOT BE RESPONSIBLE FOR THE ACCURACY OR COMPLETENESS OF SCANNED COPIES OF THIS PLAN SHEET.

WRECO
1243 ALPINE ROAD
SUITE 108
WALNUT CREEK, CA 94596

CALTRANS
111 GRAND AVENUE
OAKLAND, CA 94612

DRAINAGE QUANTITIES

DRAINAGE SYSTEM No.	DRAINAGE UNIT	CSP FES 12"	CSP FES 18"	CSP FES 24"	CSP FES 30"	CSP FES 36"	48" WSP	MINOR Conc MINOR STRUCTURE	MINOR Conc Misc CONSTRUCTION	Conc BACKFILL (RAPID STRENGTH Conc)	Misc IRON AND STEEL	PIPE ANCHOR ASSEMBLY	ROCK SLOPE PROTECTION (BACKING No. 3, METHOD B)	ROCK SLOPE PROTECTION (BACKING No. 2, METHOD B)	ROCK SLOPE PROTECTION (FACING, METHOD B)	ROCK SLOPE PROTECTION (LIGHT, METHOD B)	ROCK SLOPE PROTECTION FABRIC	CULVERT CONTACT GROUTING	~~CONTACT GROUT PORTS~~	CHECKERED PLATE (N)	BOLTDOWN COVER (N)	24" TO 18" ECCENTRIC REDUCER Conc COLLAR	FRAME & COVER OR FRAME & GRATE (N) G2 MH	FRAME & COVER OR FRAME & GRATE (N) Maint CLEANOUT (17½" Dia)	FRAME & COVER OR FRAME & GRATE (N) TYPE 24-12X	FRAME & COVER OR FRAME & GRATE (N) OS PLATE	PIPE JOINT CLASSIFICATION (N)	MAXIMUM COVER (N)	HEIGHT OF DI/MH (N)	DESCRIPTION	STATION	DRAINAGE PLAN No.	DRAINAGE SYSTEM No.	DRAINAGE UNIT
		EA	EA	EA	EA	EA	FT	CY	CY	CY	LB	EA	CY	CY	CY	CY	SQYD	CY	EA	EA	EA	EA	EA	EA	EA	EA		LF	LF					
55	a							0.28			69										1			1					2.0	Maint CLEANOUT	3.31 Rt C 61+50	D-5	55	a
	b																											0.21		18" ASP	3.31 Rt C 61+50 to 2.42 Rt C 64+50			b
	c							0.28			69										1			1					2.0	Maint CLEANOUT	2.42 Rt C 64+50			c
	d																											0.21		18" ASP	2.42 Rt C 64+50 to 1.29 Rt C 67+10			d
	e							0.28			69										1			1					2.0	Maint CLEANOUT	1.29 Rt C 67+10	D-6		e
	f																											1.00		18" ASP	1.29 Rt C 67+10 to 1.80 Rt 69+92			f
	g							1.49			239														1				4.0	GO DI	30.15 Lt C 69+81			g
	h									17																	SJ	3.50		24" APC (A) w/ Conc Bkf	30.15 Lt C 69+81 to 1.80 Rt C 69+92			h
	i							1.97			435										1		1						5.6	G2 MH w/ BOLTDOWN COVER	1.80 Rt C 69+92			i
	j									19																	SJ	3.50		24" APC (A) w/ Conc Bkf	1.80 Rt C 69+92 to 29.27 Rt C 70+09			j
	k							1.83			239														1				5.4	GO DI	29.27 Rt C 70+09			k
	l																										DD	3.42		24" APC (A)	49.12 Rt C 70+08 to 29.27 Rt C 70+09			l
	m										87									1										CHECKERED PLATE	49.12 Rt C 70+08			m
	n																					1								24" to 18" ECCENTRIC REDUCER w/ Conc COLLAR	82.99 Rt C 70+69.79			n
56	a																													REMOVE DI	30.15 Lt C 69+81	D-6	56	a
	b																													REMOVE Culv (PORTION)	30.15 Lt C 69+81 to 5.45 Lt C 69+89			b
	c																													ABANDON Culv	5.45 Lt C 69+89 to 49.12 Rt C 70+08			c
	d																													REMOVE DD	29.02 Rt C 69+90 to 79.12 Rt C 70+08			d
	e																													REMOVE Culv (PORTION)	48.64 Rt C 70+07 to 46.75 Rt C 70.07			e
57	a																													REMOVE DI	48.44 Lt C 72+50	D-6	57	a
58	a							1.74			174															1			4.2	OS DI w/ 2 SIDE OPENINGS	48.44 Lt C 72+50	D-6	58	a
	b																	2.72 ~~+08~~												24" APL	48.44 Lt C 72+50 to 58.71 Rt C 71+21			b
	c										87									1										CHECKERED PLATE	58.71 Rt C 71+21			c
59	a																													REMOVE DI	30.62 Rt C 72+70	D-6	59	a
	b																													REMOVE Culv	30.62 Rt C 72+70 to 46.13 Rt 71+84			b
60	a																													REMOVE Culv	47.69 Rt C 72+70 to 154.21 Rt C 72+69	D-6	60	a
								7.87		36	1468							2.72 ~~+08~~	2	2	4	1	1	3	2	1				SHEET TOTAL				

2

2 REVISED PER ADDENDUM No. 2 DATED FEBRUARY 28, 2011

DRAINAGE QUANTITIES

DQ-24

STATE OF CALIFORNIA - DEPARTMENT OF TRANSPORTATION
Caltrans

CONSULTANT FUNCTIONAL SUPERVISOR: HAN-BIN LIANG
CALCULATED-DESIGNED BY: JENNIFER ABRAMS
CHECKED BY: CHRIS SEWELL
REVISED BY: J.ABRAMS
DATE REVISED: 06/09/10

LAST REVISION 06-09-10 | DATE PLOTTED => 23-FEB-2011 | TIME PLOTTED => 10:36

Dist	COUNTY	ROUTE	POST MILES TOTAL PROJECT	SHEET No.	TOTAL SHEETS
04	SCI	17	0.0/2.8	129	278

REGISTERED CIVIL ENGINEER 06/09/2010 DATE

9-7-10
PLANS APPROVAL DATE

REGISTERED PROFESSIONAL ENGINEER CHRISTOPHER SEWELL No. C 64807 Exp. 6/30/11 CIVIL STATE OF CALIFORNIA

THE STATE OF CALIFORNIA OR ITS OFFICERS OR AGENTS SHALL NOT BE RESPONSIBLE FOR THE ACCURACY OR COMPLETENESS OF SCANNED COPIES OF THIS PLAN SHEET.

WRECO
1243 ALPINE ROAD
SUITE 108
WALNUT CREEK, CA 94596

CALTRANS
111 GRAND AVENUE
OAKLAND, CA 94612

DRAINAGE QUANTITIES

DRAINAGE SYSTEM No.	DRAINAGE UNIT	REMOVE INLET	REMOVE MANHOLE	REMOVE CULVERT	REMOVE DD	REMOVE CONCRETE	REMOVE HEADWALL	ABANDON CULVERT	SAND BACKFILL	ALTERNATIVE PIPE CULVERT 12" (TYPE A)	18" (TYPE A)	18" (TYPE B)	24" (TYPE A)	24" (TYPE B)	30" (TYPE A)	30" (TYPE B)	CSP DD 12"	18"	24"	30"	36"	JACK 24" RCP	CSP 42"	48"	18" ASP	ALTERNATIVE PIPELINER 18"	24"	30"	36"	REHAB RISER METHOD A	METHOD B	METHOD C	DESCRIPTION	STATION	DRAINAGE PLAN No.	DRAINAGE SYSTEM No.	DRAINAGE UNIT
		EA	EA	FT	FT	CY	EA	LF	CY	FT	FT	FT	FT	FT	FT	FT	FT	FT	FT	FT	FT	FT	FT	FT	FT	FT	FT	FT	FT	FT	FT	FT					
60	b			18																													REMOVE Culv	47.69 Rt C 72+70 to 30.62 Rt C 72+70	D-6	60	b
61	a	1																															REMOVE DI	28.84 Lt C 75+77	D-6	61	a
	b			87																													REMOVE Culv	28.84 Lt C 75+77 to 56.96 Rt C 75+78			b
	c	1																															REMOVE DI	29.40 Lt C 80+94	D-7		c
	d							223	25.95																								ABANDON Culv	29.40 Lt C 80+94 to 116.12 Rt C 82+43			d
	e	1																															REMOVE DI	31.45 Lt C 80+10			e
	f			77																													REMOVE Culv	31.45 Lt C 80+10 to 29.40 Lt C 80.94			f
62	a																																Maint CLEANOUT	1.03 Lt C 70+20	D-6	62	a
	b																								247								18" ASP	1.03 Lt C 70+20 to 0.88 Lt C 72+70			b
	c																																Maint CLEANOUT	0.88 Lt C 72+70			c
	d																								305								18" ASP	0.88 Lt C 72+70 to 0.45 Lt C 75+77			d
	e																																G2 MH w/ BOLTDOWN COVER	0.45 Lt C 75+77			e
	f																																GO DI	30.62 Rt C 72+70			f
	g										132																						18" APC (A) w/ Conc Bkf	30.62 Rt C 72+70 to 33.28 Rt C 74+10			g
	h																																GO DI	33.28 Rt C 74+10			h
	i										160																						18"APC (A) w/ Conc Bkf	33.28 Rt C 74+10 to 32.30 Rt C 75+77			i
	j																																GO DI	28.81 Lt C 75+77			j
	k										27																						18" APC (A) w/ Conc Bkf	28.84 Lt C 75+77 to 0.45 Lt C 75+77			k
	l										30																						18" APC (A) w/ Conc Bkf	0.45 Lt C 75+77 to 32.30 Rt C 75+77			l
	m																																GO DI	32.30 Rt C 75+77			m
	n										320																						18" APC (A) w/ Conc Bkf	32.30 Rt C 75+77 to 29.50 Rt C 79+00			n
	o																																GO DI	29.50 Rt C 79+00	D-7		o
	p										307																						18" APC (A) w/ Conc Bkf	29.50 Rt C 79+00 to 31.27 Rt C 82+01			p
	q																																GO DI	31.27 Rt C 82+01			q
	r										276																						18" APC (A) w/ Conc Bkf	31.27 Rt C 82+01 to 51.24 Rt C 84+63			r
	s																																G2 DI	51.24 Rt C 84+63			s
	t																				84												36" CSP DD w/ TEE w/ ANCHOR ASSEMBLIES	51.24 Rt C 84+63 to 109.36 Rt C 84+95			t
	u																																RSP	109.36 Rt C 84+95			u
	v																																GO DI	33.89 Lt C 80+10			v
		3		182				223	25.95		1252										84				552								SHEET TOTAL				

2

2 REVISED PER ADDENDUM No. 2 DATED FEBRUARY 28, 2011

DRAINAGE QUANTITIES
DQ-25

STATE OF CALIFORNIA - DEPARTMENT OF TRANSPORTATION
Caltrans

CONSULTANT FUNCTIONAL SUPERVISOR: HAN-BIN LIANG
CALCULATED-DESIGNED BY: JENNIFER ABRAMS
CHECKED BY: CHRIS SEWELL
REVISED BY: J.ABRAMS
DATE REVISED: 06/09/10

LAST REVISION 06-09-10
DATE PLOTTED => 23-FEB-2011
TIME PLOTTED => 17:32

Dist	COUNTY	ROUTE	POST MILES TOTAL PROJECT	SHEET No.	TOTAL SHEETS
04	SCI	17	0.0/2.8	130	278

REGISTERED CIVIL ENGINEER 06/09/2010 DATE

9-7-10
PLANS APPROVAL DATE

REGISTERED PROFESSIONAL ENGINEER CHRISTOPHER SEWELL No. C 64807 Exp. 6/30/11 CIVIL STATE OF CALIFORNIA

THE STATE OF CALIFORNIA OR ITS OFFICERS OR AGENTS SHALL NOT BE RESPONSIBLE FOR THE ACCURACY OR COMPLETENESS OF SCANNED COPIES OF THIS PLAN SHEET.

WRECO
1243 ALPINE ROAD
SUITE 108
WALNUT CREEK, CA 94596

CALTRANS
111 GRAND AVENUE
OAKLAND, CA 94612

DRAINAGE QUANTITIES

DRAINAGE SYSTEM No.	DRAINAGE UNIT	CSP FES 12"	CSP FES 18"	CSP FES 24"	CSP FES 30"	CSP FES 36"	48" WSP	MINOR Conc: MINOR STRUCTURE	MINOR Conc: Misc CONSTRUCTION	Conc BACKFILL (RAPID STRENGTH Conc)	Misc IRON AND STEEL	PIPE ANCHOR ASSEMBLY	ROCK SLOPE PROTECTION (BACKING No. 3, METHOD B)	ROCK SLOPE PROTECTION (BACKING No. 2, METHOD B)	ROCK SLOPE PROTECTION (FACING, METHOD B)	ROCK SLOPE PROTECTION (LIGHT, METHOD B)	ROCK SLOPE PROTECTION FABRIC	CULVERT CONTACT GROUTING	~~CONTACT GROUT PORTS~~	CHECKERED PLATE (N)	BOLTDOWN COVER (N)	24" TO 18" ECCENTRIC REDUCER Conc COLLAR	FRAME & COVER OR FRAME & GRATE (N): G2 MH	FRAME & COVER OR FRAME & GRATE (N): Maint CLEANOUT (17½" Dia)	FRAME & COVER OR FRAME & GRATE (N): TYPE 24-12X	FRAME & COVER OR FRAME & GRATE (N): OS PLATE	PIPE JOINT CLASSIFICATION (N)	MAXIMUM COVER (N)	HEIGHT OF DI/MH (N)	DESCRIPTION	STATION	DRAINAGE PLAN No.	DRAINAGE SYSTEM No.	DRAINAGE UNIT
		EA	EA	EA	EA	EA	FT	CY	CY	CY	LB	EA	CY	CY	CY	CY	SQYD	CY	EA	EA	EA	EA	EA	EA	EA	EA		LF	LF					
60	b																												REMOVE Culv	47.69 Rt C 72+70 to 30.62 Rt C 72+70	D-6	60	b
61	a																												REMOVE DI	28.84 Lt C 75+77	D-6	61	a
	b																												REMOVE Culv	28.84 Lt C 75+77 to 56.96 Rt C 75+78			b
	c																												REMOVE DI	29.40 Lt C 80+94	D-7		c
	d																												ABANDON Culv	29.40 Lt C 80+94 to 116.12 Rt C 82+43			d
	e																												REMOVE DI	31.45 Lt C 80+10			e
	f																												REMOVE Culv	31.45 Lt C 80+10 to 29.40 Lt C 80.94			f
62	a							0.28		69										1			1					2.0	Maint CLEANOUT	1.03 Lt C 70+20	D-6	62	a
	b																										1.00		18" ASP	1.03 Lt C 70+20 to 0.88 Lt C 72+70			b
	c							0.28		69										1			1					2.0	Maint CLEANOUT	0.88 Lt C 72+70			c
	d																										1.00		18" ASP	0.88 Lt C 72+70 to 0.45 Lt C 75+77			d
	e							1.74		435										1		1						4.7	G2 MH w/ BOLTDOWN COVER	0.45 Lt C 75+77			e
	f							1.36		239														1				3.5	GO DI	30.62 Rt C 72+70			f
	g								49																	PJ	2.00		18" APC (A) w/ Conc Bkf	30.62 Rt C 72+70 to 33.28 Rt C 74+10			g
	h							1.31		239														1				3.6	GO DI	33.28 Rt C 74+10			h
	i								60																	PJ	2.00		18"APC (A) w/ Conc Bkf	33.28 Rt C 74+10 to 32.30 Rt C 75+77			i
	j							1.66		239														1				4.7	GO DI	28.81 Lt C 75+77			j
	k								13																	SJ	3.20		18" APC (A) w/ Conc Bkf	28.84 Lt C 75+77 to 0.45 Lt C 75+77			k
	l								13																	SJ	3.30		18" APC (A) w/ Conc Bkf	0.45 Lt C 75+77 to 32.30 Rt C 75+77			l
	m							1.49		239														1				4.0	GO DI	32.30 Rt C 75+77			m
	n								120																	PJ	2.60		18" APC (A) w/ Conc Bkf	32.30 Rt C 75+77 to 29.50 Rt C 79+00			n
	o							1.39		239														1				3.6	GO DI	29.50 Rt C 79+00	D-7		o
	p								115																	PJ	3.10		18" APC (A) w/ Conc Bkf	29.50 Rt C 79+00 to 31.27 Rt C 82+01			p
	q							1.39		239														1				3.6	GO DI	31.27 Rt C 82+01			q
	r								103																	PJ	2.88		18" APC (A) w/ Conc Bkf	31.27 Rt C 82+01 to 51.24 Rt C 84+63			r
	s							4.00		239														1				9.4	G2 DI	51.24 Rt C 84+63			s
	t											5 ~~2~~														DD	6.30		36" CSP DD w/ TEE w/ ANCHOR ASSEMBLIES	51.24 Rt C 84+63 to 109.36 Rt C 84+95			t
	u												10.23			45.2													RSP	109.36 Rt C 84+95			u
	v							1.49		239														1				4.0	GO DI	33.89 Lt C 80+10			v
								16.39		473	2485	5 ~~2~~	10.23			45.2				3		1	2	8					SHEET TOTAL				

2 REVISED PER ADDENDUM No. 2 DATED FEBRUARY 28, 2011

DRAINAGE QUANTITIES
DQ-26

STATE OF CALIFORNIA - DEPARTMENT OF TRANSPORTATION
Caltrans

CONSULTANT FUNCTIONAL SUPERVISOR: HAN-BIN LIANG
CALCULATED-DESIGNED BY: JENNIFER ABRAMS
CHECKED BY: CHRIS SEWELL
REVISED BY: J.ABRAMS
DATE REVISED: 06/09/10

LAST REVISION 06-09-10
DATE PLOTTED => 23-FEB-2011
TIME PLOTTED => 10:36

Dist	COUNTY	ROUTE	POST MILES TOTAL PROJECT	SHEET No.	TOTAL SHEETS
04	SCI	17	0.0/2.8	131	278

REGISTERED CIVIL ENGINEER 06/09/2010 DATE

9-7-10
PLANS APPROVAL DATE

REGISTERED PROFESSIONAL ENGINEER CHRISTOPHER SEWELL No. C 64807 Exp. 6/30/11 CIVIL STATE OF CALIFORNIA

THE STATE OF CALIFORNIA OR ITS OFFICERS OR AGENTS SHALL NOT BE RESPONSIBLE FOR THE ACCURACY OR COMPLETENESS OF SCANNED COPIES OF THIS PLAN SHEET.

WRECO
1243 ALPINE ROAD
SUITE 108
WALNUT CREEK, CA 94596

CALTRANS
111 GRAND AVENUE
OAKLAND, CA 94612

DRAINAGE QUANTITIES

DRAINAGE SYSTEM No.	DRAINAGE UNIT	REMOVE INLET	REMOVE MANHOLE	REMOVE CULVERT	REMOVE DD	REMOVE CONCRETE	REMOVE HEADWALL	ABANDON CULVERT	SAND BACKFILL	ALTERNATIVE PIPE CULVERT 12" (TYPE A)	18" (TYPE A)	18" (TYPE B)	24" (TYPE A)	24" (TYPE B)	30" (TYPE A)	30" (TYPE B)	CSP DD 12"	18"	24"	30"	36"	JACK 24" RCP	CSP 42"	48"	18" ASP	ALTERNATIVE PIPELINER 18"	24"	30"	36"	REHAB RISER METHOD A	METHOD B	METHOD C	DESCRIPTION	STATION	DRAINAGE PLAN No.	DRAINAGE SYSTEM No.	DRAINAGE UNIT
		EA	EA	FT	FT	CY	EA	LF	CY	FT	FT	FT	FT	FT	FT	FT	FT	FT	FT	FT	FT	FT	FT	FT	FT	FT	FT	FT	FT	FT	FT	FT					
62	w												77																				24" APC (A) w/ Conc Bkf	33.89 Lt C 80+10 to 29.40 Lt C 80+94		62	w
	x																																GO DI	29.40 Lt C 80+94			x
	y												99																				24" APC (A) w/ Conc Bkf	29.40 Lt C 80+94 to 28.82 Lt C 82+00			y
	z																																GO DI	28.82 Lt C 82+00			z
	aa												260																				24" APC (A) w/ Conc Bkf	28.82 Lt C 82+00 to 30.22 Lt C 84.63			aa
	bb																																GO DI	30.22 Lt C 84+63			bb
	cc																					78											JACK 24" RCP	30.22 Lt C 84+63 to 51.24 Rt C 84+63			cc
63	a																																Maint CLEANOUT	1.47 Rt C 78+35	D-6	63	a
	b																								163								18" ASP	1.47 Rt C 78+35 to 0.12 Rt C 80+00			b
	c																																Maint CLEANOUT	0.12 Rt C 80+00	D-7		c
	d																								198								18" ASP	0.12 Rt C 80+00 to 2.25 Rt C 82+00			d
	e																																Maint CLEANOUT	2.25 Rt C 82+00			e
	f																								276								18" ASP	2.25 Rt C 82+00 to 4.20 Rt C 84+77			f
	g																																G2 MH w/ BOLTDOWN COVER	4.20 Rt C 84+77			g
	h										34																						18" APC (A) w/ Conc Bkf	4.20 Rt C 84+77 to 31.71 Lt C 84+77			h
	i																																GO DI	31.71 Lt C 84+77			i
	j																									150							18" APL	31.71 Lt C 84+77 to 113.17 Rt C 85+07			j
	k																																18" CSP FES	113.17 Rt C 85+07			k
	l																																RSP	113.17 Rt C 85+07			l
64	a				52																												REMOVE DD	52.40 Rt C 87+02 to 96.77 Rt C 87+02	D-7	64	a
	b	1																															REMOVE DI	31.71 Lt C 84+77			b
65	a																																G2 DI	39.43 Rt C 86+68	D-7	65	a
	b										16																						18" APC (A)	39.43 Rt C 86+68 to 54.33 Rt C 86+77			b
	c																																G2 MH	54.33 Rt C 86+77			c
	d																59																12" CSP DD w/ TEE	54.33 Rt C 86+77 to 96.77 Rt C 87+02			d
	e																																RSP	96.77 Rt C 87+02			e
		1			52						50		436				59					78			637	150							SHEET TOTAL				

2

2 REVISED PER ADDENDUM No. 2 DATED FEBRUARY 28, 2011

DRAINAGE QUANTITIES
DQ-27

STATE OF CALIFORNIA - DEPARTMENT OF TRANSPORTATION
Caltrans

CONSULTANT FUNCTIONAL SUPERVISOR: HAN-BIN LIANG
CALCULATED-DESIGNED BY: JENNIFER ABRAMS
CHECKED BY: CHRIS SEWELL
REVISED BY: J.ABRAMS
DATE REVISED: 06/09/10

LAST REVISION 06-09-10 | DATE PLOTTED => 23-FEB-2011 | TIME PLOTTED => 17:32

Dist	COUNTY	ROUTE	POST MILES TOTAL PROJECT	SHEET No.	TOTAL SHEETS
04	SCI	17	0.0/2.8	132	278

REGISTERED CIVIL ENGINEER 06/09/2010 DATE

9-7-10
PLANS APPROVAL DATE

REGISTERED PROFESSIONAL ENGINEER CHRISTOPHER SEWELL No. C 64807 Exp. 6/30/11 CIVIL STATE OF CALIFORNIA

THE STATE OF CALIFORNIA OR ITS OFFICERS OR AGENTS SHALL NOT BE RESPONSIBLE FOR THE ACCURACY OR COMPLETENESS OF SCANNED COPIES OF THIS PLAN SHEET.

WRECO
1243 ALPINE ROAD
SUITE 108
WALNUT CREEK, CA 94596

CALTRANS
111 GRAND AVENUE
OAKLAND, CA 94612

DRAINAGE QUANTITIES

DRAINAGE SYSTEM No.	DRAINAGE UNIT	CSP FES 12"	CSP FES 18"	CSP FES 24"	CSP FES 30"	CSP FES 36"	48" WSP	MINOR Conc: MINOR STRUCTURE	MINOR Conc: Misc CONSTRUCTION	Conc BACKFILL (RAPID STRENGTH Conc)	Misc IRON AND STEEL	PIPE ANCHOR ASSEMBLY	ROCK SLOPE PROTECTION (BACKING No. 3, METHOD B)	ROCK SLOPE PROTECTION (BACKING No. 2, METHOD B)	ROCK SLOPE PROTECTION (FACING, METHOD B)	ROCK SLOPE PROTECTION (LIGHT, METHOD B)	ROCK SLOPE PROTECTION FABRIC	CULVERT CONTACT GROUTING	~~CONTACT GROUT PORTS~~	CHECKERED PLATE (N)	BOLTDOWN COVER (N)	24" TO 18" ECCENTRIC REDUCER Conc COLLAR	FRAME & COVER OR FRAME & GRATE (N): G2 MH	FRAME & COVER OR FRAME & GRATE (N): Maint CLEANOUT (17½" Dia)	FRAME & COVER OR FRAME & GRATE (N): TYPE 24-12X	FRAME & COVER OR FRAME & GRATE (N): OS PLATE	PIPE JOINT CLASSIFICATION (N)	MAXIMUM COVER (N)	HEIGHT OF DI/MH (N)	DESCRIPTION	STATION	DRAINAGE PLAN No.	DRAINAGE SYSTEM No.	DRAINAGE UNIT
		EA	EA	EA	EA	EA	FT	CY	CY	CY	LB	EA	CY	CY	CY	CY	SQYD	CY	EA	EA	EA	EA	EA	EA	EA	EA		LF	LF					
62	w									34																SJ	2.10		24" APC (A) w/ Conc Bkf	33.89 Lt C 80+10 to 29.40 Lt C 80+94		62	w
	x							1.51			239													1				4.1	GO DI	29.40 Lt C 80+94			x
	y									44																SJ	2.10		24" APC (A) w/ Conc Bkf	29.40 Lt C 80+94 to 28.82 Lt C 82+00			y
	z							1.51			239													1				4.1	GO DI	28.82 Lt C 82+00			z
	aa									116																PJ	2.10		24" APC (A) w/ Conc Bkf	28.82 Lt C 82+00 to 30.22 Lt C 84.63			aa
	bb							1.49			239													1				4.0	GO DI	30.22 Lt C 84+63			bb
	cc																									SJ	8.62		JACK 24" RCP	30.22 Lt C 84+63 to 51.24 Rt C 84+63			cc
63	a							0.28			69										1		1					2.0	Maint CLEANOUT	1.47 Rt C 78+35	D-6	63	a
	b																										0.21		18" ASP	1.47 Rt C 78+35 to 0.12 Rt C 80+00			b
	c							0.28			69										1		1					2.0	Maint CLEANOUT	0.12 Rt C 80+00	D-7		c
	d																										0.21		18" ASP	0.12 Rt C 80+00 to 2.25 Rt C 82+00			d
	e							0.28			69										1		1					2.0	Maint CLEANOUT	2.25 Rt C 82+00			e
	f																										1.00		18" ASP	2.25 Rt C 82+00 to 4.20 Rt C 84+77			f
	g							1.44			435										1	1						3.5	G2 MH w/ BOLTDOWN COVER	4.20 Rt C 84+77			g
	h									14																DD	2.30		18" APC (A) w/ Conc Bkf	4.20 Rt C 84+77 to 31.71 Lt C 84+77			h
	i							1.66			239													1				4.7	GO DI	31.71 Lt C 84+77			i
	j																	1.91 ~~100~~												18" APL	31.71 Lt C 84+77 to 113.17 Rt C 85+07			j
	k		1																											18" CSP FES	113.17 Rt C 85+07			k
	l												1.14			8.0														RSP	113.17 Rt C 85+07			l
64	a																													REMOVE DD	52.40 Rt C 87+02 to 96.77 Rt C 87+02	D-7	64	a
	b																													REMOVE DI	31.71 Lt C 84+77			b
65	a							1.44			239													1				3.5	G2 DI	39.43 Rt C 86+68	D-7	65	a
	b																									DD	2.00		18" APC (A)	39.43 Rt C 86+68 to 54.33 Rt C 86+77			b
	c							1.81			435											1						3.3	G2 MH	54.33 Rt C 86+77			c
	d											3																		12" CSP DD w/ TEE	54.33 Rt C 86+77 to 96.77 Rt C 87+02			d
	e														4.1	9.0														RSP	96.77 Rt C 87+02			e
			1					11.70		208	2272	3	1.14		4.1	17.0		1.91 ~~100~~			4		2	3	5					SHEET TOTAL				

2 2

2 **REVISED PER ADDENDUM No. 2 DATED FEBRUARY 28, 2011**

DRAINAGE QUANTITIES

DQ-28

STATE OF CALIFORNIA - DEPARTMENT OF TRANSPORTATION
Caltrans

CONSULTANT FUNCTIONAL SUPERVISOR: HAN-BIN LIANG

CALCULATED-DESIGNED BY: JENNIFER ABRAMS
CHECKED BY: CHRIS SEWELL

REVISED BY: J.ABRAMS
DATE REVISED: 06/09/10

LAST REVISION 06-09-10
DATE PLOTTED => 23-FEB-2011
TIME PLOTTED => 10:36

Dist	COUNTY	ROUTE	POST MILES TOTAL PROJECT	SHEET No.	TOTAL SHEETS
04	SCI	17	0.0/2.8	133	278

REGISTERED CIVIL ENGINEER 06/09/2010 DATE

9-7-10
PLANS APPROVAL DATE

REGISTERED PROFESSIONAL ENGINEER CHRISTOPHER SEWELL No. C 64807 Exp. 6/30/11 CIVIL STATE OF CALIFORNIA

THE STATE OF CALIFORNIA OR ITS OFFICERS OR AGENTS SHALL NOT BE RESPONSIBLE FOR THE ACCURACY OR COMPLETENESS OF SCANNED COPIES OF THIS PLAN SHEET.

WRECO
1243 ALPINE ROAD
SUITE 108
WALNUT CREEK, CA 94596

CALTRANS
111 GRAND AVENUE
OAKLAND, CA 94612

DRAINAGE QUANTITIES

DRAINAGE SYSTEM No.	DRAINAGE UNIT	REMOVE INLET (EA)	REMOVE MANHOLE (EA)	REMOVE CULVERT (FT)	REMOVE DD (FT)	REMOVE CONCRETE (CY)	REMOVE HEADWALL (EA)	ABANDON CULVERT (LF)	SAND BACKFILL (CY)	ALTERNATIVE PIPE CULVERT: 12" (TYPE A) (FT)	18" (TYPE A) (FT)	18" (TYPE B) (FT)	24" (TYPE A) (FT)	24" (TYPE B) (FT)	30" (TYPE A) (FT)	30" (TYPE B) (FT)	CSP DD: 12" (FT)	18" (FT)	24" (FT)	30" (FT)	36" (FT)	JACK 24" RCP (FT)	CSP: 42" (FT)	48" (FT)	18" ASP (FT)	ALTERNATIVE PIPELINER: 18" (FT)	24" (FT)	30" (FT)	36" (FT)	REHAB RISER: METHOD A (FT)	METHOD B (FT)	METHOD C (FT)	DESCRIPTION	STATION	DRAINAGE PLAN No.	DRAINAGE SYSTEM No.	DRAINAGE UNIT
66	a	1																															REMOVE DI	33.18 Lt C 90+32	D-7	66	a
	b			290																													REMOVE Culv	33.18 Lt C 90+32 to 31.78 Lt C 93+25			b
	c			40																													REMOVE Culv	31.78 Lt C 93+25 to 50.67 Lt C 93+60	D-8		c
	d			113																													REMOVE Culv	50.67 Lt C 93+60 to 50.34 Lt C 94+65			d
	e			21																													REMOVE Culv	50.34 Lt C 94+65 to 56.36 Lt C 94+85			e
67	a																								272								18" ASP	4.21 Rt C 84+77 to 2.35 Rt C 87+50	D-7	67	a
	b																																Maint CLEANOUT	2.35 Rt C 87+50			b
	c																								282								18" ASP	2.35 Rt C 87+50 to 1.24 Rt C 90+33			c
	d																																G2 MH w/ BOLTDOWN COVER	1.24 Rt C 90+33			d
	e										44																						18" APC (A) w/ Conc Bkf	1.24 Rt C 90+33 to 33.18 Lt C 90+32			e
	f																																GO DI	33.18 Lt C 90+32			f
	g										290																						18" APC (A)	33.18 Lt C 90+32 to 31.78 Lt C 93+25	D-8		g
	h												40																				24" APC (A) w/ Conc Bkf	31.78 Lt C 93+25 to 50.67 Lt C 93+60			h
	i													113																			24" APC (B)	50.67 Lt C 93+60 to 50.34 Lt C 94+65			i
	j												21																				24" APC (A)	50.34 Lt C 94+65 to 56.36 Lt C 94+85			j
68	a																																Maint CLEANOUT	2.81 Lt C 90+40	D-7	68	a
	b																								218								18" ASP	2.81 Lt C 90+40 to 3.59 Lt C 92+60	D-8		b
	c																																Maint CLEANOUT	3.59 Lt C 92+60			c
	d																								298								18" ASP	3.59 Lt C 92+60 to 0.75 Lt C 95+60			d
	e																																G2 MH w/ BOLTDOWN COVER	0.75 Lt C 95+60			e
	f										34																						18" APC (A) w/ Conc Bkf	0.75 Lt C 95+60 to 35.86 Rt C 95+62			f
	g																																GO DI	35.86 Rt C 95+62			g
	h																	274															18" CSP DD w/ TEE w/ ANCHOR ASSEMBLIES	35.86 Rt C 95+62 to 263.09 Rt C 95+97			h
	i																																GO DI	36.04 Rt C 92+20			i
	j										316																						18" APC(A) w/ Conc Bkf	36.04 Rt C 92+20 to 35.86 Rt C 95+62			j
		1		464							684		61	113				274							1070							SHEET TOTAL				

2

2 **REVISED PER ADDENDUM No. 2 DATED FEBRUARY 28, 2011**

DRAINAGE QUANTITIES
DQ-29

STATE OF CALIFORNIA - DEPARTMENT OF TRANSPORTATION
Caltrans

CONSULTANT FUNCTIONAL SUPERVISOR: HAN-BIN LIANG
CALCULATED-DESIGNED BY: JENNIFER ABRAMS
CHECKED BY: CHRIS SEWELL
REVISED BY: J.ABRAMS
DATE REVISED: 06/09/10

LAST REVISION 06-09-10 | DATE PLOTTED => 23-FEB-2011 | TIME PLOTTED => 17:32

Dist	COUNTY	ROUTE	POST MILES TOTAL PROJECT	SHEET No.	TOTAL SHEETS
04	SCI	17	0.0/2.8	134	278

REGISTERED CIVIL ENGINEER 06/09/2010 DATE

9-7-10
PLANS APPROVAL DATE

REGISTERED PROFESSIONAL ENGINEER CHRISTOPHER SEWELL No. C 64807 Exp. 6/30/11 CIVIL STATE OF CALIFORNIA

THE STATE OF CALIFORNIA OR ITS OFFICERS OR AGENTS SHALL NOT BE RESPONSIBLE FOR THE ACCURACY OR COMPLETENESS OF SCANNED COPIES OF THIS PLAN SHEET.

WRECO
1243 ALPINE ROAD
SUITE 108
WALNUT CREEK, CA 94596

CALTRANS
111 GRAND AVENUE
OAKLAND, CA 94612

DRAINAGE QUANTITIES

DRAINAGE SYSTEM No.	DRAINAGE UNIT	CSP FES 12" EA	CSP FES 18" EA	CSP FES 24" EA	CSP FES 30" EA	CSP FES 36" EA	48" WSP FT	MINOR Conc MINOR STRUCTURE CY	MINOR Conc Misc CONSTRUCTION CY	Conc BACKFILL (RAPID STRENGTH Conc) CY	Misc IRON AND STEEL LB	PIPE ANCHOR ASSEMBLY EA	ROCK SLOPE PROTECTION (BACKING No. 3, METHOD B) CY	ROCK SLOPE PROTECTION (BACKING No. 2, METHOD B) CY	ROCK SLOPE PROTECTION (FACING, METHOD B) CY	ROCK SLOPE PROTECTION (LIGHT, METHOD B) CY	ROCK SLOPE PROTECTION FABRIC SQYD	CULVERT CONTACT GROUTING CY	~~CONTACT GROUT PORTS EA~~	CHECKERED PLATE (N) EA	BOLTDOWN COVER (N) EA	24" TO 18" ECCENTRIC REDUCER Conc COLLAR EA	FRAME & COVER OR FRAME & GRATE (N) G2 MH EA	FRAME & COVER OR FRAME & GRATE (N) Maint CLEANOUT (17½" Dia) EA	FRAME & COVER OR FRAME & GRATE (N) TYPE 24-12X EA	FRAME & COVER OR FRAME & GRATE (N) OS PLATE EA	PIPE JOINT CLASSIFICATION (N)	MAXIMUM COVER (N) LF	HEIGHT OF DI/MH (N) LF	DESCRIPTION	STATION	DRAINAGE PLAN No.	DRAINAGE SYSTEM No.	DRAINAGE UNIT
66	a																													REMOVE DI	33.18 Lt C 90+32	D-7	66	a
	b																													REMOVE Culv	33.18 Lt C 90+32 to 31.78 Lt C 93+25			b
	c																													REMOVE Culv	31.78 Lt C 93+25 to 50.67 Lt C 93+60	D-8		c
	d																													REMOVE Culv	50.67 Lt C 93+60 to 50.34 Lt C 94+65			d
	e																													REMOVE Culv	50.34 Lt C 94+65 to 56.36 Lt C 94+85			e
67	a																											0.20		18" ASP	4.21 Rt C 84+77 to 2.35 Rt C 87+50	D-7	67	a
	b							0.28			69																		2.0	Maint CLEANOUT	2.35 Rt C 87+50			b
	c																											1.00		18" ASP	2.35 Rt C 87+50 to 1.24 Rt C 90+33			c
	d							1.44			435										1		1						3.5	G2 MH w/ BOLTDOWN COVER	1.24 Rt C 90+33			d
	e									16																	DD	2.00		18" APC (A) w/ Conc Bkf	1.24 Rt C 90+33 to 33.18 Lt C 90+32			e
	f							1.39			239														1				3.6	GO DI	33.18 Lt C 90+32			f
	g																										SJ	2.10		18" APC (A)	33.18 Lt C 90+32 to 31.78 Lt C 93+25	D-8		g
	h									19																	PJ	2.80		24" APC (A) w/ Conc Bkf	31.78 Lt C 93+25 to 50.67 Lt C 93+60			h
	i																										PJ	3.00		24" APC (B)	50.67 Lt C 93+60 to 50.34 Lt C 94+65			i
	j																										DD	3.20		24" APC (A)	50.34 Lt C 94+65 to 56.36 Lt C 94+85			j
68	a							0.28			69										1			1					2.0	Maint CLEANOUT	2.81 Lt C 90+40	D-7	68	a
	b																											0.21		18" ASP	2.81 Lt C 90+40 to 3.59 Lt C 92+60	D-8		b
	c							0.28			69										1			1					2.0	Maint CLEANOUT	3.59 Lt C 92+60			c
	d																											1.00		18" ASP	3.59 Lt C 92+60 to 0.75 Lt C 95+60			d
	e							1.44			435										1		1						3.5	G2 MH w/ BOLTDOWN COVER	0.75 Lt C 95+60			e
	f									117																	DD	2.00		18" APC (A) w/ Conc Bkf	0.75 Lt C 95+60 to 35.86 Rt C 95+62			f
	g							1.39			239														1				3.6	GO DI	35.86 Rt C 95+62			g
	h											9 ~~2~~															DD	3.10		18" CSP DD w/ TEE w/ ANCHOR ASSEMBLIES	35.86 Rt C 95+62 to 263.09 Rt C 95+97			h
	i							1.36			239														1				3.5	GO DI				i
	j									13																				18" APC(A) w/ Conc Bkf				j
								7.86		165	1794	9 ~~2~~									4		2	2	3					SHEET TOTAL				

2 2

2 REVISED PER ADDENDUM No. 2 DATED FEBRUARY 28, 2011

DRAINAGE QUANTITIES

DQ-30

JENNIFER ABRAMS	REVISED BY	J.ABRAMS	
CHRIS SEWELL	DATE REVISED	06/09/10	
CALCULATED-DESIGNED BY			
CHECKED BY			
CONSULTANT FUNCTIONAL SUPERVISOR			
HAN-BIN LIANG			

STATE OF CALIFORNIA - DEPARTMENT OF TRANSPORTATION

Caltrans

LAST REVISION 06-09-10 DATE PLOTTED => 23-FEB-2011 TIME PLOTTED => 10:36

Dist	COUNTY	ROUTE	POST MILES TOTAL PROJECT	SHEET No.	TOTAL SHEETS
04	SCI	17	0.0/2.8	135	278

REGISTERED CIVIL ENGINEER 06/09/2010 DATE

9-7-10
PLANS APPROVAL DATE

REGISTERED PROFESSIONAL ENGINEER CHRISTOPHER SEWELL No. C 64807 Exp. 6/30/11 CIVIL STATE OF CALIFORNIA

THE STATE OF CALIFORNIA OR ITS OFFICERS OR AGENTS SHALL NOT BE RESPONSIBLE FOR THE ACCURACY OR COMPLETENESS OF SCANNED COPIES OF THIS PLAN SHEET.

WRECO
1243 ALPINE ROAD
SUITE 108
WALNUT CREEK, CA 94596

CALTRANS
111 GRAND AVENUE
OAKLAND, CA 94612

DRAINAGE QUANTITIES

DRAINAGE SYSTEM No.	DRAINAGE UNIT	REMOVE INLET (EA)	REMOVE MANHOLE (EA)	REMOVE CULVERT (FT)	REMOVE DD (FT)	REMOVE CONCRETE (CY)	REMOVE HEADWALL (EA)	ABANDON CULVERT (LF)	SAND BACKFILL (CY)	ALTERNATIVE PIPE CULVERT 12" (TYPE A) (FT)	18" (TYPE A) (FT)	18" (TYPE B) (FT)	24" (TYPE A) (FT)	24" (TYPE B) (FT)	30" (TYPE A) (FT)	30" (TYPE B) (FT)	CSP DD 12" (FT)	18" (FT)	24" (FT)	30" (FT)	36" (FT)	JACK 24" RCP (FT)	CSP 42" (FT)	48" (FT)	18" ASP (FT)	ALTERNATIVE PIPELINER 18" (FT)	24" (FT)	30" (FT)	36" (FT)	REHAB RISER METHOD A (FT)	METHOD B (FT)	METHOD C (FT)	DESCRIPTION	STATION	DRAINAGE PLAN No.	DRAINAGE SYSTEM No.	DRAINAGE UNIT
69	a	1																															REMOVE DI	35.86 Rt C 95+62	D-8	69	a
	b				269																												REMOVE DD	35.86 Rt C 95+62 to 263.09 Rt C 95+97			b
70	a	1																															REMOVE DI	31.50 Rt C 98+06	D-8	70	a
71	a																								244								18" ASP	0.75 Lt C 95+60 to 1.17 Rt C 98+06	D-8	71	a
	b																																G2 MH w/ BOLTDOWN COVER	1.17 Rt C 98+06			b
	c										27																						18" APC (A) w/ Conc Bkf	1.17 Rt C 98+06 to 31.50 Rt C 98+06			c
	d																																GO DI	31.50 Rt C 98+06			d
	e																101																12" CSP DD w/ TEE w/ ANCHOR ASSEMBLIES	31.50 Rt C 98+06 to 114.55 Rt C 98+03			e
	f																																RSP	114.55 Rt C 98+03			f
	g																																GO DI	32.20 Rt C 97+40			g
	h										59																						18" APC (A) w/ Conc Bkf	32.20 Rt C 97+40 to 31.50 Rt C 98+06			h
	i																																GO DI	33.75 Rt C 98+60			i
	j										48																						18" APC (A) w/ Conc Bkf	31.50 Rt C 98+06 to 33.75 Rt C 98+60			j
	k																								241								18" ASP	1.17 Rt C 98+06 to 0.93 Rt C 100+50			k
	l																																Main† CLEANOUT	0.93 Rt C 100+50			l
	m																								298								18" ASP	0.93 Rt C 100+50 to 0.85 C Lt 103+50			m
	n																																Main† CLEANOUT	0.85 Lt C 103+50	D-9		n
	o																								275								18" ASP	1.39 Lt C 106+26 to 0.85 Lt C 103+50			o
72	a				23																												REMOVE DD	90.35 Lt C 98+24 to 100.55 Lt C 98+10	D-8	72	a
	b	1																															REMOVE DI	59.28 Lt C 98+76			b
73	a																																G2 DI	59.28 Lt C 98+76	D-8	73	a
	b										65																						18" APC (A)	59.28 Lt C 98+76 to 90.35 Lt C 98+24			b
	c																																G2 MH	90.35 Lt C 98+24			c
	d																23																12" CSP DD w/ TEE w/ ANCHOR ASSEMBLIES	90.35 Lt C 98+24 to 100.55 Lt C 98+10			d
	e																																RSP	100.55 Lt C 98+10			e
		3			292						199						124								1058								SHEET TOTAL				

2

2 REVISED PER ADDENDUM No. 2 DATED FEBRUARY 28, 2011

DRAINAGE QUANTITIES
DQ-31

STATE OF CALIFORNIA - DEPARTMENT OF TRANSPORTATION
Caltrans

CONSULTANT FUNCTIONAL SUPERVISOR: HAN-BIN LIANG
CALCULATED-DESIGNED BY: JENNIFER ABRAMS
CHECKED BY: CHRIS SEWELL
REVISED BY: J.ABRAMS
DATE REVISED: 06/09/10

LAST REVISION 08-19-10
DATE PLOTTED => 23-FEB-2011
TIME PLOTTED => 17:32

Dist	COUNTY	ROUTE	POST MILES TOTAL PROJECT	SHEET No.	TOTAL SHEETS
04	SCI	17	0.0/2.8	136	278

REGISTERED CIVIL ENGINEER 06/09/2010 DATE

9-7-10
PLANS APPROVAL DATE

REGISTERED PROFESSIONAL ENGINEER CHRISTOPHER SEWELL No. C 64807 Exp. 6/30/11 CIVIL STATE OF CALIFORNIA

THE STATE OF CALIFORNIA OR ITS OFFICERS OR AGENTS SHALL NOT BE RESPONSIBLE FOR THE ACCURACY OR COMPLETENESS OF SCANNED COPIES OF THIS PLAN SHEET.

WRECO
1243 ALPINE ROAD
SUITE 108
WALNUT CREEK, CA 94596

CALTRANS
111 GRAND AVENUE
OAKLAND, CA 94612

DRAINAGE QUANTITIES

DRAINAGE SYSTEM No.	DRAINAGE UNIT	CSP FES 12" (EA)	CSP FES 18" (EA)	CSP FES 24" (EA)	CSP FES 30" (EA)	CSP FES 36" (EA)	48" WSP (FT)	MINOR Conc: MINOR STRUCTURE (CY)	MINOR Conc: Misc CONSTRUCTION (CY)	Conc BACKFILL (RAPID STRENGTH Conc) (CY)	Misc IRON AND STEEL (LB)	PIPE ANCHOR ASSEMBLY (EA)	ROCK SLOPE PROTECTION (BACKING No. 3, METHOD B) (CY)	ROCK SLOPE PROTECTION (BACKING No. 2, METHOD B) (CY)	ROCK SLOPE PROTECTION (FACING, METHOD B) (CY)	ROCK SLOPE PROTECTION (LIGHT, METHOD B) (CY)	ROCK SLOPE PROTECTION FABRIC (SQYD)	CULVERT CONTACT GROUTING (CY)	~~CONTACT GROUT PORTS (EA)~~	CHECKERED PLATE (N) (EA)	BOLTDOWN COVER (N) (EA)	24" TO 18" ECCENTRIC REDUCER Conc COLLAR (EA)	FRAME & COVER OR FRAME & GRATE (N): G2 MH (EA)	FRAME & COVER OR FRAME & GRATE (N): Maint CLEANOUT (17½" Dia) (EA)	FRAME & COVER OR FRAME & GRATE (N): TYPE 24-12X (EA)	FRAME & COVER OR FRAME & GRATE (N): OS PLATE (EA)	PIPE JOINT CLASSIFICATION (N)	MAXIMUM COVER (N) (LF)	HEIGHT OF DI/MH (N) (LF)	DESCRIPTION	STATION	DRAINAGE PLAN No.	DRAINAGE SYSTEM No.	DRAINAGE UNIT
69	a																													REMOVE DI	35.86 Rt C 95+62	D-8	69	a
	b																													REMOVE DD	35.86 Rt C 95+62 to 263.09 Rt C 95+97			b
70	a																													REMOVE DI	31.50 Rt C 98+06	D-8	70	a
71	a																												1.00	18" ASP	0.75 Lt C 95+60 to 1.17 Rt C 98+06	D-8	71	a
	b							1.44			435											1		1					3.5	G2 MH w/ BOLTDOWN COVER	1.17 Rt C 98+06			b
	c									10																	DD	2.00		18" APC (A) w/ Conc Bkf	1.17 Rt C 98+06 to 31.50 Rt C 98+06			c
	d							1.61			239														1				4.5	GO DI	31.50 Rt C 98+06			d
	e											~~6~~ 2															DD	3.67		12" CSP DD w/ TEE w/ ANCHOR ASSEMBLIES	31.50 Rt C 98+06 to 114.55 Rt C 98+03			e
	f														1.76		7.0													RSP	114.55 Rt C 98+03			f
	g							1.36			239														1				3.5	GO DI	32.20 Rt C 97+40			g
	h									23																	SJ	2.60		18" APC (A) w/ Conc Bkf	32.20 Rt C 97+40 to 31.50 Rt C 98+06			h
	i							1.36			239														1				3.5	GO DI	33.75 Rt C 98+60			i
	j									19																	SJ	2.50		18" APC (A) w/ Conc Bkf	31.50 Rt C 98+06 to 33.75 Rt C 98+60			j
	k																												1.00	18" ASP	1.17 Rt C 98+06 to 0.93 Rt C 100+50			k
	l							0.28			69											1			1				2.0	Maint CLEANOUT	0.93 Rt C 100+50			l
	m																												0.21	18" ASP	0.93 Rt C 100+50 to 0.85 C Lt 103+50			m
	n							0.28			69											1			1				2.0	Maint CLEANOUT	0.85 Lt C 103+50	D-9		n
	o																												21.00	18" ASP	1.39 Lt C 106+26 to 0.85 Lt C 103+50			o
72	a																													REMOVE DD	90.35 Lt C 98+24 to 100.55 Lt C 98+10	D-8	72	a
	b																													REMOVE DI	59.28 Lt C 98+76			b
73	a							1.44			239														1				3.5	G2 DI	59.28 Lt C 98+76	D-8	73	a
	b																										SJ	2.00		18" APC (A)	59.28 Lt C 98+76 to 90.35 Lt C 98+24			b
	c							1.77			435													1					3.2	G2 MH	90.35 Lt C 98+24			c
	d											~~4~~ 2															DD	0.00		12" CSP DD w/ TEE w/ ANCHOR ASSEMBLIES	90.35 Lt C 98+24 to 100.55 Lt C 98+10			d
	e												0.70				6.0													RSP	100.55 Lt C 98+10			e
								9.54		52	1964	~~10~~ 4	0.70		1.76		13.0					3		2	2	4					SHEET TOTAL				

2 2

2 **REVISED PER ADDENDUM No. 2 DATED FEBRUARY 28, 2011**

DRAINAGE QUANTITIES
DQ-32

STATE OF CALIFORNIA - DEPARTMENT OF TRANSPORTATION
Caltrans

CONSULTANT FUNCTIONAL SUPERVISOR: HAN-BIN LIANG
CALCULATED-DESIGNED BY: JENNIFER ABRAMS
CHECKED BY: CHRIS SEWELL
REVISED BY: J.ABRAMS
DATE REVISED: 06/09/10

LAST REVISION 08-19-10
DATE PLOTTED => 23-FEB-2011
TIME PLOTTED => 10:36

Dist	COUNTY	ROUTE	POST MILES TOTAL PROJECT	SHEET No.	TOTAL SHEETS
04	SCI	17	0.0/2.8	137	278

REGISTERED CIVIL ENGINEER 06/09/2010 DATE

9-7-10
PLANS APPROVAL DATE

REGISTERED PROFESSIONAL ENGINEER CHRISTOPHER SEWELL No. C 64807 Exp. 6/30/11 CIVIL STATE OF CALIFORNIA

THE STATE OF CALIFORNIA OR ITS OFFICERS OR AGENTS SHALL NOT BE RESPONSIBLE FOR THE ACCURACY OR COMPLETENESS OF SCANNED COPIES OF THIS PLAN SHEET.

WRECO
1243 ALPINE ROAD
SUITE 108
WALNUT CREEK, CA 94596

CALTRANS
111 GRAND AVENUE
OAKLAND, CA 94612

DRAINAGE QUANTITIES

DRAINAGE SYSTEM No.	DRAINAGE UNIT	REMOVE INLET (EA)	REMOVE MANHOLE (EA)	REMOVE CULVERT (FT)	REMOVE DD (FT)	REMOVE CONCRETE (CY)	REMOVE HEADWALL (EA)	ABANDON CULVERT (LF)	SAND BACKFILL (CY)	ALTERNATIVE PIPE CULVERT 12" (TYPE A) (FT)	18" (TYPE A) (FT)	18" (TYPE B) (FT)	24" (TYPE A) (FT)	24" (TYPE B) (FT)	30" (TYPE A) (FT)	30" (TYPE B) (FT)	CSP DD 12" (FT)	18" (FT)	24" (FT)	30" (FT)	36" (FT)	JACK 24" RCP (FT)	CSP 42" (FT)	48" (FT)	18" ASP (FT)	ALTERNATIVE PIPELINER 18" (FT)	24" (FT)	30" (FT)	36" (FT)	REHAB RISER METHOD A (FT)	METHOD B (FT)	METHOD C (FT)	DESCRIPTION	STATION	DRAINAGE PLAN No.	DRAINAGE SYSTEM No.	DRAINAGE UNIT
74	a																																GO DI	35.43 Rt C 104+90	D-9	74	a
	b										165																						18" APC(A) w/ Conc Bkf	35.43 Rt C 104+90 to 37.00 Rt C 103+10			b
	c																																GO DI	37.00 Rt C 103+10			c
	d										21																						18" APC(A)	37.00 Rt C 103+10 to 52.10 Rt C 103+26			d
	e																																18" CSP FES	52.10 Rt C 103+26			e
	f																																RSP	52.10 Rt C 103+26			f
75	a																													27			REHAB RISER, METHOD A	137.82 Lt C 103+70	D-9	75	a
	b																											452					36" APL	137.82 Lt 103+70 to 277.36 Rt C 105+84			b
	c																				21												36" CSP DD w/ TEE w/ ANCHOR ASSEMBLIES	277.36 Rt C 105+84 to 289.09 Rt C 106+70			c
	d																																RSP	289.09 Rt C 106+70			d
76	a	1																															REMOVE DI	35.81 Rt C 106+26	D-9	76	a
	b				273																												REMOVE DD	35.81 Rt C 106+26 to 270.49 Rt C 105+92			b
77	a																																Maint CLEANOUT	3.00 Lt C 109+00	D-9	77	a
	b																								275								18" ASP	3.00 Lt C 109+00 to 1.39 Lt C 106+26			b
	c																																G2 MH w/ BOLTDOWN COVER	1.39 Lt C 106+26			c
	d										34																						18" APC (A) w/ Conc Bkf	1.39 Lt C 106+26 to 35.81 Rt C 106+26			d
	e																																GO DI	35.81 Rt C 106+26			e
	f																273																12" CSP DD w/ TEE w/ ANCHOR ASSEMBLIES	35.81 Rt C 106+26 to 270.49 Rt C 105+92			f
	g																																RSP	270.49 Rt C 105+92			g
	h										142																						18" APC (A) w/ Conc Bkf	33.82 Rt C 107+80 to 35.81 Rt C 106+26			h
	i																																GO DI	33.82 Rt C 107+80			i
78	a																													21			REHAB RISER, METHOD A	110.87 Lt C 107+64	D-9	78	a
	b																										318						24" APL	110.87 Lt C 107+64 to 178.48 Rt C 108+76			b
	c																		9														24" CSP DD w/ TEE w/ ANCHOR ASSEMBLIES	178.48 Rt C 108+76 to 181.40 Rt C 108+77			c
	d																																RSP	181.40 Rt C 108+77			d
		1			273						362						273		9		21				275		318		452	48			SHEET TOTAL				

2

2 REVISED PER ADDENDUM No. 2 DATED FEBRUARY 28, 2011

DRAINAGE QUANTITIES
DQ-33

STATE OF CALIFORNIA - DEPARTMENT OF TRANSPORTATION
Caltrans

JENNIFER ABRAMS | CHRIS SEWELL | HAN-BIN LIANG | J.ABRAMS | 06/09/10

CALCULATED-DESIGNED BY | CHECKED BY | CONSULTANT FUNCTIONAL SUPERVISOR | REVISED BY | DATE REVISED

LAST REVISION 06-09-10 | DATE PLOTTED => 23-FEB-2011 | TIME PLOTTED => 17:32

Dist	COUNTY	ROUTE	POST MILES TOTAL PROJECT	SHEET No.	TOTAL SHEETS
04	SCI	17	0.0/2.8	138	278

REGISTERED CIVIL ENGINEER 06/09/2010 DATE

9-7-10
PLANS APPROVAL DATE

REGISTERED PROFESSIONAL ENGINEER CHRISTOPHER SEWELL No. C 64807 Exp. 6/30/11 CIVIL STATE OF CALIFORNIA

THE STATE OF CALIFORNIA OR ITS OFFICERS OR AGENTS SHALL NOT BE RESPONSIBLE FOR THE ACCURACY OR COMPLETENESS OF SCANNED COPIES OF THIS PLAN SHEET.

WRECO
1243 ALPINE ROAD
SUITE 108
WALNUT CREEK, CA 94596

CALTRANS
111 GRAND AVENUE
OAKLAND, CA 94612

DRAINAGE QUANTITIES

DRAINAGE SYSTEM No.	DRAINAGE UNIT	CSP FES 12" (EA)	CSP FES 18" (EA)	CSP FES 24" (EA)	CSP FES 30" (EA)	CSP FES 36" (EA)	48" WSP (FT)	MINOR Conc: MINOR STRUCTURE (CY)	MINOR Conc: Misc CONSTRUCTION (CY)	Conc BACKFILL (RAPID STRENGTH Conc) (CY)	Misc IRON AND STEEL (LB)	PIPE ANCHOR ASSEMBLY (EA)	ROCK SLOPE PROTECTION (BACKING No. 3, METHOD B) (CY)	ROCK SLOPE PROTECTION (BACKING No. 2, METHOD B) (CY)	ROCK SLOPE PROTECTION (FACING, METHOD B) (CY)	ROCK SLOPE PROTECTION (LIGHT, METHOD B) (CY)	ROCK SLOPE PROTECTION FABRIC (SQYD)	CULVERT CONTACT GROUTING (CY)	CONTACT GROUT PORTS (EA)	CHECKERED PLATE (N) (EA)	BOLTDOWN COVER (N) (EA)	24" TO 18" ECCENTRIC REDUCER Conc COLLAR (EA)	FRAME & COVER OR FRAME & GRATE (N): G2 MH (EA)	FRAME & COVER OR FRAME & GRATE (N): Maint CLEANOUT (17½" Dia) (EA)	FRAME & COVER OR FRAME & GRATE (N): TYPE 24-12X (EA)	FRAME & COVER OR FRAME & GRATE (N): OS PLATE (EA)	PIPE JOINT CLASSIFICATION (N)	MAXIMUM COVER (N) (LF)	HEIGHT OF DI/MH (N) (LF)	DESCRIPTION	STATION	DRAINAGE PLAN No.	DRAINAGE SYSTEM No.	DRAINAGE UNIT
74	a							1.36			239														1			3.5	GO DI	35.43 Rt C 104+90	D-9	74	a
	b									61																	SJ	2.00		18" APC(A) w/ Conc Bkf	35.43 Rt C 104+90 to 37.00 Rt C 103+10			b
	c							1.39			239														1			3.6	GO DI	37.00 Rt C 103+10			c
	d																										PJ	2.10		18" APC(A)	37.00 Rt C 103+10 to 52.10 Rt C 103+26			d
	e		1																											18" CSP FES	52.10 Rt C 103+26			e
	f												1.14				8.0													RSP	52.10 Rt C 103+26			f
75	a																													REHAB RISER, METHOD A	137.82 Lt C 103+70	D-9	75	a
	b																	10.68	~~300~~											36" APL	137.82 Lt 103+70 to 277.36 Rt C 105+84			b
	c											4 ~~2~~															DD	0.00		36" CSP DD w/ TEE w/ ANCHOR ASSEMBLIES	277.36 Rt C 105+84 to 289.09 Rt C 106+70			c
	d														14.99		53.2													RSP	289.09 Rt C 106+70			d
76	a																													REMOVE DI	35.81 Rt C 106+26	D-9	76	a
	b																													REMOVE DD	35.81 Rt C 106+26 to 270.49 Rt C 105+92			b
77	a							0.28			69										1			1					2.0	Maint CLEANOUT	3.00 Lt C 109+00	D-9	77	a
	b																											1.00		18" ASP	3.00 Lt C 109+00 to 1.39 Lt C 106+26			b
	c							1.44			435										1		1						3.5	G2 MH w/ BOLTDOWN COVER	1.39 Lt C 106+26			c
	d									13																	DD	2.60		18" APC (A) w/ Conc Bkf	1.39 Lt C 106+26 to 35.81 Rt C 106+26			d
	e							1.39			239														1				3.6	GO DI	35.81 Rt C 106+26			e
	f											9 ~~2~~															DD	2.60		12" CSP DD w/ TEE w/ ANCHOR ASSEMBLIES	35.81 Rt C 106+26 to 270.49 Rt C 105+92			f
	g												0.70				6.0													RSP	270.49 Rt C 105+92			g
	h									53																	PJ	2.00		18" APC (A) w/ Conc Bkf	33.82 Rt C 107+80 to 35.81 Rt C 106+26			h
	i							1.36			239														1				3.5	GO DI	33.82 Rt C 107+80			i
78	a																													REHAB RISER, METHOD A	110.87 Lt C 107+64	D-9	78	a
	b																	5.20	~~2~~ ~~2~~											24" APL	110.87 Lt C 107+64 to 178.48 Rt C 108+76			b
	c											4 ~~2~~															DD	0.00		24" CSP DD w/ TEE w/ ANCHOR ASSEMBLIES	178.48 Rt C 108+76 to 181.40 Rt C 108+77			c
	d														5.49		19.6													RSP	181.40 Rt C 108+77			d
			1					7.22		127	1460	17 ~~6~~	1.84		20.48		86.8	15.88	~~5~~ ~~2~~		2		1	1	4					SHEET TOTAL				

2 2

2 **REVISED PER ADDENDUM No. 2 DATED FEBRUARY 28, 2011**

DRAINAGE QUANTITIES

DQ-34

JENNIFER ABRAMS	J.ABRAMS	CALCULATED-DESIGNED BY	CONSULTANT FUNCTIONAL SUPERVISOR
CHRIS SEWELL	06/09/10	CHECKED BY	HAN-BIN LIANG
REVISED BY	DATE REVISED		

STATE OF CALIFORNIA - DEPARTMENT OF TRANSPORTATION

Caltrans

LAST REVISION 06-09-10 | DATE PLOTTED => 23-FEB-2011 | TIME PLOTTED => 10:27

Dist	COUNTY	ROUTE	POST MILES TOTAL PROJECT	SHEET No.	TOTAL SHEETS
04	SCI	17	0.0/2.8	139	278

REGISTERED CIVIL ENGINEER 06/09/2010 DATE

PLANS APPROVAL DATE 9-7-10

REGISTERED PROFESSIONAL ENGINEER CHRISTOPHER SEWELL No. C 64807 Exp. 6/30/11 CIVIL STATE OF CALIFORNIA

THE STATE OF CALIFORNIA OR ITS OFFICERS OR AGENTS SHALL NOT BE RESPONSIBLE FOR THE ACCURACY OR COMPLETENESS OF SCANNED COPIES OF THIS PLAN SHEET.

WRECO
1243 ALPINE ROAD
SUITE 108
WALNUT CREEK, CA 94596

CALTRANS
111 GRAND AVENUE
OAKLAND, CA 94612

DRAINAGE QUANTITIES

DRAINAGE SYSTEM No.	DRAINAGE UNIT	REMOVE INLET (EA)	REMOVE MANHOLE (EA)	REMOVE CULVERT (FT)	REMOVE DD (FT)	REMOVE CONCRETE (CY)	REMOVE HEADWALL (EA)	ABANDON CULVERT (LF)	SAND BACKFILL (CY)	ALTERNATIVE PIPE CULVERT 12" (TYPE A) (FT)	18" (TYPE A) (FT)	18" (TYPE B) (FT)	24" (TYPE A) (FT)	24" (TYPE B) (FT)	30" (TYPE A) (FT)	30" (TYPE B) (FT)	CSP DD 12" (FT)	18" (FT)	24" (FT)	30" (FT)	36" (FT)	JACK 24" RCP (FT)	CSP 42" (FT)	48" (FT)	18" CURED-IN-PLACE PIPELINER (CIPP) (FT)	18" ASP (FT)	ALTERNATIVE PIPELINER 18" (FT)	24" (FT)	30" (FT)	36" (FT)	REHAB RISER METHOD A (FT)	METHOD B (FT)	METHOD C (FT)	DESCRIPTION	STATION	DRAINAGE PLAN No.	DRAINAGE SYSTEM No.	DRAINAGE UNIT
79	a																																	Maint CLEANOUT	0.60 Lt C 109+90	D-9	79	a
	b																									302								18" ASP	0.60 Lt C 109+90 to 0.91 Lt C 112+90			b
	c																																	Maint CLEANOUT	0.91 Lt C 112+90			c
	d																									298								18" ASP	0.91 Lt C 112+90 to 1.41 Rt C 115+90			d
	e																																	Maint CLEANOUT	1.41 Rt C 115+90	D-10		e
	f																									296								18" ASP	1.41 Rt C 115+90 to 5.49 Rt C 118+86			f
	g																																	G2 MH w/ BOLTDOWN COVER	5.49 Rt C 118+86			g
	h										31																							18" APC (A) w/ Conc Bkf	5.49 Rt C 118+86 to 34.26 Rt C 118+86			h
	i																																	GDO DI	34.26 Rt C 118+86			i
	j												61																					24" APC (A) w/ Conc Bkf	34.26 Rt C 118+86 to 29.14 Lt C 119+50			j
	k																																	GO DI	29.14 Lt C 119+50			k
	l												48																					24" APC (A) w/ Conc Bkf	29.14 Lt C 119+50 to 28.59 Lt C 120+00			l
	m																																	GO DI	28.59 Lt C 120+00			m
	n												89																					24" APC (A) w/ Conc Bkf	28.59 Lt C 120+00 to 34.14 Lt C 120+90			n
	o																																	GO DI	34.14 Lt C 120+90			o
	p												77																					24" APC (A) w/ Conc Bkf	34.14 Lt C 120+90 to 32.91 Lt C 121+67			p
	q																																	GO DI	32.91 Lt C 121+67			q
	r													71																				24" APC (B) w/ Conc Bkf	32.91 Lt C 121+67 to 26.42 Rt C 122+08			r
	s																																	GO DI	29.41 Lt C 116+00			s
	t										145																							18" APC (A) w/ Conc Bkf	29.41 Lt C 116+00 to 30.82 Lt C 117+57			t
	u																																	GO DI	30.82 Lt C 117+57			u
	v										125																							18" APC (A) w/ Conc Bkf	30.82 Lt C 117+57 to 34.26 Lt C 118+86			v
	w																																	GO DI	28.38 Rt C 120+40			w
	x										162																							18" APC (A) w/ Conc Bkf	28.38 Rt C 120+40 to 26.42 Rt C 122+08			x
	y																																	GO DI	26.42 Rt C 122+08			y
	z																		84															24" CSP DD w/ TEE w/ ANCHOR ASSEMBLIES	26.42 Rt C 122+08 to 85.37 Rt C 122+53			z
	aa																																	RSP	85.37 Rt C 122+53			aa
											463		275	71					84							896								SHEET TOTAL				

2

2 REVISED PER ADDENDUM No. 2 DATED FEBRUARY 28, 2011

DRAINAGE QUANTITIES

DQ-35

STATE OF CALIFORNIA - DEPARTMENT OF TRANSPORTATION

Caltrans

CONSULTANT FUNCTIONAL SUPERVISOR: HAN-BIN LIANG

CALCULATED-DESIGNED BY: JENNIFER ABRAMS

CHECKED BY: CHRIS SEWELL

REVISED BY: J.ABRAMS

DATE REVISED: 06/09/10

LAST REVISION 06-09-10 | DATE PLOTTED => 23-FEB-2011 | TIME PLOTTED => 17:33

Dist	COUNTY	ROUTE	POST MILES TOTAL PROJECT	SHEET No.	TOTAL SHEETS
04	SCI	17	0.0/2.8	140	278

REGISTERED CIVIL ENGINEER 06/09/2010 DATE

9-7-10
PLANS APPROVAL DATE

REGISTERED PROFESSIONAL ENGINEER CHRISTOPHER SEWELL No. C 64807 Exp. 6/30/11 CIVIL STATE OF CALIFORNIA

THE STATE OF CALIFORNIA OR ITS OFFICERS OR AGENTS SHALL NOT BE RESPONSIBLE FOR THE ACCURACY OR COMPLETENESS OF SCANNED COPIES OF THIS PLAN SHEET.

WRECO
1243 ALPINE ROAD
SUITE 108
WALNUT CREEK, CA 94596

CALTRANS
111 GRAND AVENUE
OAKLAND, CA 94612

DRAINAGE QUANTITIES

DRAINAGE SYSTEM No.	DRAINAGE UNIT	CSP FES 12"	CSP FES 18"	CSP FES 24"	CSP FES 30"	CSP FES 36"	48" WSP	MINOR Conc: MINOR STRUCTURE	MINOR Conc: Misc CONSTRUCTION	Conc BACKFILL (RAPID STRENGTH Conc)	Misc IRON AND STEEL	PIPE ANCHOR ASSEMBLY	ROCK SLOPE PROTECTION (BACKING No. 3, METHOD B)	ROCK SLOPE PROTECTION (BACKING No. 2, METHOD B)	ROCK SLOPE PROTECTION (FACING, METHOD B)	ROCK SLOPE PROTECTION (LIGHT, METHOD B)	ROCK SLOPE PROTECTION FABRIC	CULVERT CONTACT GROUTING	CONTACT GROUT PORTS	CHECKERED PLATE (N)	BOLTDOWN COVER (N)	24" TO 18" ECCENTRIC REDUCER Conc COLLAR	FRAME & COVER OR FRAME & GRATE (N): G2 MH	FRAME & COVER OR FRAME & GRATE (N): Maint CLEANOUT (17½" Dia)	FRAME & COVER OR FRAME & GRATE (N): TYPE 24-12X	FRAME & COVER OR FRAME & GRATE (N): OS PLATE	PIPE JOINT CLASSIFICATION (N)	MAXIMUM COVER (N)	HEIGHT OF DI/MH (N)	DESCRIPTION	STATION	DRAINAGE PLAN No.	DRAINAGE SYSTEM No.	DRAINAGE UNIT
		EA	EA	EA	EA	EA	FT	CY	CY	CY	LB	EA	CY	CY	CY	CY	SQYD	CY	EA	EA	EA	EA	EA	EA	EA	EA		LF	LF					
79	a							0.28			69										1			1				2.0	Maint CLEANOUT	0.60 Lt C 109+90	D-9	79	a
	b																										0.21		18" ASP	0.60 Lt C 109+90 to 0.91 Lt C 112+90			b
	c							0.28			69										1			1				2.0	Maint CLEANOUT	0.91 Lt C 112+90			c
	d																										0.21		18" ASP	0.91 Lt C 112+90 to 1.41 Rt C 115+90			d
	e							0.28			69										1			1				2.0	Maint CLEANOUT	1.41 Rt C 115+90	D-10		e
	f																										1.00		18" ASP	1.41 Rt C 115+90 to 5.49 Rt C 118+86			f
	g							1.44			435										1		1					3.5	G2 MH w/ BOLTDOWN COVER	5.49 Rt C 118+86			g
	h								11																	PJ	2.00		18" APC (A) w/ Conc Bkf	5.49 Rt C 118+86 to 34.26 Rt C 118+86			h
	i							1.97			473														2			4.1	GDO DI	34.26 Rt C 118+86			i
	j								27																	PJ	2.00		24" APC (A) w/ Conc Bkf	34.26 Rt C 118+86 to 29.14 Lt C 119+50			j
	k							1.46			239														1			3.9	GO DI	29.14 Lt C 119+50			k
	l								21																	PJ	2.10		24" APC (A) w/ Conc Bkf	29.14 Lt C 119+50 to 28.59 Lt C 120+00			l
	m							1.51			239														1			4.1	GO DI	28.59 Lt C 120+00			m
	n								40																	PJ	2.10		24" APC (A) w/ Conc Bkf	28.59 Lt C 120+00 to 34.14 Lt C 120+90			n
	o							1.51			239														1			4.1	GO DI	34.14 Lt C 120+90			o
	p								34																	PJ	2.10		24" APC (A) w/ Conc Bkf	34.14 Lt C 120+90 to 32.91 Lt C 121+67			p
	q							2.07			239														1			6.4	GO DI	32.91 Lt C 121+67			q
	r								41																	PJ	4.90		24" APC (B) w/ Conc Bkf	32.91 Lt C 121+67 to 26.42 Rt C 122+08			r
	s							1.36			239														1			3.5	GO DI	29.41 Lt C 116+00			s
	t								54																	PJ	2.00		18" APC (A) w/ Conc Bkf	29.41 Lt C 116+00 to 30.82 Lt C 117+57			t
	u							1.39			239														1			3.6	GO DI	30.82 Lt C 117+57			u
	v								47																	PJ	2.10		18" APC (A) w/ Conc Bkf	30.82 Lt C 117+57 to 34.26 Lt C 118+86			v
	w							1.36			239														1			3.5	GO DI	28.38 Rt C 120+40			w
	x								60																	PJ	2.00		18" APC (A) w/ Conc Bkf	28.38 Rt C 120+40 to 26.42 Rt C 122+08			x
	y							1.51			239														1			4.1	GO DI	26.42 Rt C 122+08			y
	z											5 ~~2~~														DD	2.10		24" CSP DD w/ TEE w/ ANCHOR ASSEMBLIES	26.42 Rt C 122+08 to 85.37 Rt C 122+53			z
	aa													7.06		25.6													RSP	85.37 Rt C 122+53			aa
								16.42		335	3027	5 ~~2~~		7.06		25.6					4		1	3	10				SHEET TOTAL				

2 2

2 **REVISED PER ADDENDUM No. 2 DATED FEBRUARY 28, 2011**

DRAINAGE QUANTITIES

DQ-36

STATE OF CALIFORNIA - DEPARTMENT OF TRANSPORTATION
Caltrans

CONSULTANT FUNCTIONAL SUPERVISOR: HAN-BIN LIANG
CALCULATED-DESIGNED BY: JENNIFER ABRAMS
CHECKED BY: CHRIS SEWELL
REVISED BY: J.ABRAMS
DATE REVISED: 06/09/10

LAST REVISION 06-09-10 | DATE PLOTTED => 23-FEB-2011 | TIME PLOTTED => 10:27

Dist	COUNTY	ROUTE	POST MILES TOTAL PROJECT	SHEET No.	TOTAL SHEETS
04	SCI	17	0.0/2.8	141	278

REGISTERED CIVIL ENGINEER 06/09/2010 DATE

9-7-10
PLANS APPROVAL DATE

REGISTERED PROFESSIONAL ENGINEER CHRISTOPHER SEWELL No. C 64807 Exp. 6/30/11 CIVIL STATE OF CALIFORNIA

THE STATE OF CALIFORNIA OR ITS OFFICERS OR AGENTS SHALL NOT BE RESPONSIBLE FOR THE ACCURACY OR COMPLETENESS OF SCANNED COPIES OF THIS PLAN SHEET.

WRECO
1243 ALPINE ROAD
SUITE 108
WALNUT CREEK, CA 94596

CALTRANS
111 GRAND AVENUE
OAKLAND, CA 94612

DRAINAGE QUANTITIES

DRAINAGE SYSTEM No.	DRAINAGE UNIT	REMOVE INLET	REMOVE MANHOLE	REMOVE CULVERT	REMOVE DD	REMOVE CONCRETE	REMOVE HEADWALL	ABANDON CULVERT	SAND BACKFILL	ALTERNATIVE PIPE CULVERT 12" (TYPE A)	18" (TYPE A)	18" (TYPE B)	24" (TYPE A)	24" (TYPE B)	30" (TYPE A)	30" (TYPE B)	CSP DD 12"	18"	24"	30"	36"	JACK 24" RCP	CSP 42"	48"	18" CURED-IN-PLACE PIPELINER (CIPP)	18" ASP	ALTERNATIVE PIPELINER 18"	24"	30"	36"	REHAB RISER METHOD A	METHOD B	METHOD C	DESCRIPTION	STATION	DRAINAGE PLAN No.	DRAINAGE SYSTEM No.	DRAINAGE UNIT
		EA	EA	FT	FT	CY	EA	LF	CY	FT	FT	FT	FT	FT	FT	FT	FT	FT	FT	FT	FT	FT	FT	FT	FT	FT	FT	FT	FT	FT	FT	FT	FT					
80	a	1																																REMOVE DI	34.26 R+ C 118+86	D-10	80	a
	b							284	33.04																									ABANDON Culv	28.80 L+ C 118+86 to 26.70 L+ C 121+67			b
	c	1																																REMOVE DI	32.91 L+ C 121+67			c
	d			35																														REMOVE Culv (PORTION)	26.70 L+ C 121+67 to 0.79 L+ C 121+84			d
	e							115	7.53																									ABANDON Culv	0.79 L+ C 121+84 to 85.37 R+ C 122+53			e
	f				57																													REMOVE DD	26.92 R+ C 122+08 to 77.71 R+ C 122+11			f
	g	1																																REMOVE DI	26.42 R+ C 122+08			g
81	a				29																													REMOVE DD	47.19 R+ C 115+71 to 66.45 R+ C 115+89	D-10	81	a
82	a																																	G2 DI	47.19 R+ C 115+71	D-10	82	a
	b																32																	12" CSP DD w/ TEE w/ ANCHOR ASSEMBLIES	47.19 R+ C 115+71 to 66.45 R+ C 115+89			b
	c																																	RSP	66.45 R+ C 115+89			c
83	a																																	DEBRIS RACK	34.88 L+ C 132+74	D-10	83	a
	b																											153						24" APL	34.88 L+ C 132+74 to 108.69 R+ C 132+94			b
	c																																	24" CSP FES	108.69 R+ C 132+94			c
	d																																	RSP	108.69 R+ C 132+94			d
84	a	1																																REMOVE DI	27.27 R+ C 124+80	D-10	84	a
	b				107																													REMOVE DD	27.27 R+ C 124+80 to 120.10 R+ C 124+76			b
	c			24																														REMOVE Culv	110.67 R+ C 124+56 to 120.10 R+ C 124+76			c
	d			95																														REMOVE Culv	120.10 R+ C 124+76 to 150.34 R+ C 125+41			d
	e	1																																REMOVE DI	150.34 R+ C 125+41			e
		5		154	193			399	40.57								32											153						SHEET TOTAL				

2

2 REVISED PER ADDENDUM No. 2 DATED FEBRUARY 28, 2011

DRAINAGE QUANTITIES

DQ-37

STATE OF CALIFORNIA - DEPARTMENT OF TRANSPORTATION
Caltrans

JENNIFER ABRAMS | REVISED BY | J.ABRAMS
CHRIS SEWELL | DATE REVISED | 06/09/10
CALCULATED-DESIGNED BY
CHECKED BY
CONSULTANT FUNCTIONAL SUPERVISOR
HAN-BIN LIANG

LAST REVISION 06-09-10 | DATE PLOTTED => 23-FEB-2011 | TIME PLOTTED => 17:33

Dist	COUNTY	ROUTE	POST MILES TOTAL PROJECT	SHEET No.	TOTAL SHEETS
04	SCI	17	0.0/2.8	142	278

REGISTERED CIVIL ENGINEER 06/09/2010 DATE

9-7-10
PLANS APPROVAL DATE

REGISTERED PROFESSIONAL ENGINEER CHRISTOPHER SEWELL No. C 64807 Exp. 6/30/11 CIVIL STATE OF CALIFORNIA

THE STATE OF CALIFORNIA OR ITS OFFICERS OR AGENTS SHALL NOT BE RESPONSIBLE FOR THE ACCURACY OR COMPLETENESS OF SCANNED COPIES OF THIS PLAN SHEET.

WRECO
1243 ALPINE ROAD
SUITE 108
WALNUT CREEK, CA 94596

CALTRANS
111 GRAND AVENUE
OAKLAND, CA 94612

DRAINAGE QUANTITIES

DRAINAGE SYSTEM No.	DRAINAGE UNIT	CSP FES 12" (EA)	CSP FES 18" (EA)	CSP FES 24" (EA)	CSP FES 30" (EA)	CSP FES 36" (EA)	48" WSP (FT)	MINOR Conc: MINOR STRUCTURE (CY)	MINOR Conc: Misc CONSTRUCTION (CY)	Conc BACKFILL (RAPID STRENGTH Conc) (CY)	Misc IRON AND STEEL (LB)	PIPE ANCHOR ASSEMBLY (EA)	ROCK SLOPE PROTECTION (BACKING No. 3, METHOD B) (CY)	ROCK SLOPE PROTECTION (BACKING No. 2, METHOD B) (CY)	ROCK SLOPE PROTECTION (FACING, METHOD B) (CY)	ROCK SLOPE PROTECTION (LIGHT, METHOD B) (CY)	ROCK SLOPE PROTECTION FABRIC (SQYD)	CULVERT CONTACT GROUTING (CY)	CONTACT GROUT PORTS (EA)	CHECKERED PLATE (N) (EA)	BOLTDOWN COVER (N) (EA)	24" TO 18" ECCENTRIC REDUCER Conc COLLAR (EA)	FRAME & COVER OR FRAME & GRATE (N): G2 MH (EA)	FRAME & COVER OR FRAME & GRATE (N): Maint CLEANOUT (11½" Dia) (EA)	FRAME & COVER OR FRAME & GRATE (N): TYPE 24-12X (EA)	FRAME & COVER OR FRAME & GRATE (N): OS PLATE (EA)	PIPE JOINT CLASSIFICATION (N)	MAXIMUM COVER (N) (LF)	HEIGHT OF DI/MH (N) (LF)	DESCRIPTION	STATION	DRAINAGE PLAN No.	DRAINAGE SYSTEM No.	DRAINAGE UNIT
80	a																													REMOVE DI	34.26 Rt C 118+86	D-10	80	a
	b																													ABANDON Culv	28.80 Lt C 118+86 to 26.70 Lt C 121+67			b
	c																													REMOVE DI	32.91 Lt C 121+67			c
	d																													REMOVE Culv (PORTION)	26.70 Lt C 121+67 to 0.79 Lt C 121+84			d
	e																													ABANDON Culv	0.79 Lt C 121+84 to 85.37 Rt C 122+53			e
	f																													REMOVE DD	26.92 Rt C 122+08 to 77.71 Rt C 122+11			f
	g																													REMOVE DI	26.42 Rt C 122+08			g
81	a																													REMOVE DD	47.19 Rt C 115+71 to 66.45 Rt C 115+89	D-10	81	a
82	a							1.31			239														1				3.0	G2 DI	47.19 Rt C 115+71	D-10	82	a
	b								4			2															DD	2.00		12" CSP DD w/ TEE w/ ANCHOR ASSEMBLIES	47.19 Rt C 115+71 to 66.45 Rt C 115+89			b
	c												0.70				6.0													RSP	66.45 Rt C 115+89			c
83	a							0.75			502																			DEBRIS RACK	34.88 Lt C 132+74	D-10	83	a
	b																	2.50 ~~100~~												24" APL	34.88 Lt C 132+74 to 108.69 Rt C 132+94			b
	c			1																										24" CSP FES	108.69 Rt C 132+94			c
	d												2.03				12.6													RSP	108.69 Rt C 132+94			d
84	a																													REMOVE DI	27.27 Rt C 124+80	D-10	84	a
	b																													REMOVE DD	27.27 Rt C 124+80 to 120.10 Rt C 124+76			b
	c																													REMOVE Culv	110.67 Rt C 124+56 to 120.10 Rt C 124+76			c
	d																													REMOVE Culv	120.10 Rt C 124+76 to 150.34 Rt C 125+41			d
	e																													REMOVE DI	150.34 Rt C 125+41			e
				1				2.06	4		741	2	2.73				18.6	2.50 ~~100~~							1					SHEET TOTAL				

2 2

2 **REVISED PER ADDENDUM No. 2 DATED FEBRUARY 28, 2011**

DRAINAGE QUANTITIES
DQ-38

STATE OF CALIFORNIA - DEPARTMENT OF TRANSPORTATION
Caltrans

CONSULTANT FUNCTIONAL SUPERVISOR: HAN-BIN LIANG

CALCULATED-DESIGNED BY: JENNIFER ABRAMS
CHECKED BY: CHRIS SEWELL

REVISED BY: J.ABRAMS
DATE REVISED: 06/09/10

LAST REVISION 06-09-10 | DATE PLOTTED => 23-FEB-2011 | TIME PLOTTED => 10:27

Dist	COUNTY	ROUTE	POST MILES TOTAL PROJECT	SHEET No.	TOTAL SHEETS
04	SCI	17	0.0/2.8	143	278

REGISTERED CIVIL ENGINEER 06/09/2010 DATE

9-7-10
PLANS APPROVAL DATE

REGISTERED PROFESSIONAL ENGINEER CHRISTOPHER SEWELL No. C 64807 Exp. 6/30/11 CIVIL STATE OF CALIFORNIA

THE STATE OF CALIFORNIA OR ITS OFFICERS OR AGENTS SHALL NOT BE RESPONSIBLE FOR THE ACCURACY OR COMPLETENESS OF SCANNED COPIES OF THIS PLAN SHEET.

WRECO
1243 ALPINE ROAD
SUITE 108
WALNUT CREEK, CA 94596

CALTRANS
111 GRAND AVENUE
OAKLAND, CA 94612

DRAINAGE QUANTITIES

DRAINAGE SYSTEM No.	DRAINAGE UNIT	REMOVE INLET (EA)	REMOVE MANHOLE (EA)	REMOVE CULVERT (FT)	REMOVE DD (FT)	REMOVE CONCRETE (CY)	REMOVE HEADWALL (EA)	ABANDON CULVERT (LF)	SAND BACKFILL (CY)	ALTERNATIVE PIPE CULVERT: 12" (TYPE A) (FT)	18" (TYPE A) (FT)	18" (TYPE B) (FT)	24" (TYPE A) (FT)	24" (TYPE B) (FT)	30" (TYPE A) (FT)	30" (TYPE B) (FT)	CSP DD: 12" (FT)	18" (FT)	24" (FT)	30" (FT)	36" (FT)	JACK 24" RCP (FT)	CSP: 42" (FT)	48" (FT)	18" CURED-IN-PLACE PIPELINER (CIPP) (FT)	18" ASP (FT)	ALTERNATIVE PIPELINER: 18" (FT)	24" (FT)	30" (FT)	36" (FT)	REHAB RISER: METHOD A (FT)	METHOD B (FT)	METHOD C (FT)	DESCRIPTION	STATION	DRAINAGE PLAN No.	DRAINAGE SYSTEM No.	DRAINAGE UNIT
85	a																																	Maint CLEANOUT	1.92 Lt C 119+63	D-10	85	a
	b																									235								18" ASP	1.92 Lt C 119+63 to 1.92 Lt C 122+00			b
	c																																	Maint CLEANOUT	1.92 Lt C 122+00			c
	d																									299								18" ASP	1.92 Lt C 122+00 to 3.84 Lt C 125+00			d
	e																																	G2 MH w/ BOLTDOWN COVER	3.84 Lt C 125+00			e
	f										53																							18" APC (A) w/ Conc Bkf	3.84 Lt C 125+00 to 40.64 Lt C 125+40			f
	g																										200							18" APL	40.64 Lt C 125+40 to 150.34 Rt C 125+41			g
	h																																	OS DI w/ 2 SIDE OPENINGS	150.34 Rt C 125+41			h
	i																																	GO DI	27.27 Rt C 124+80			i
	j																107																	12" CSP DD	27.27 Rt C 124+80 to 120.10 Rt C 124+76			j
	k																		24															24" CSP	110.67 Rt C 124+56 to 120.10 Rt C 124+76			k
	l																																	G2 MH	120.10 Rt C 124+76			l
	m													95																				24" APC (B)	120.10 Rt C 124+76 to 150.34 Rt C 125+41			m
86	a	1																																REMOVE DI	30.03 Rt C 126+51	D-11	86	a
	b				47																													REMOVE DD	30.03 Rt C 126+51 to 61.13 Rt C 126+85			b
87	a																																	GO DI	30.03 Rt C 126+51	D-11	87	a
	b																50																	12" CSP DD w/ TEE w/ ANCHOR ASSEMBLIES	30.03 Rt C 126+51 to 61.13 Rt C 126+85			b
88	a			119																														REMOVE Culv	34.35 Lt C 128+48 to 79.94 Rt C 128+15	D-11	88	a
	b	1																																REMOVE DI	34.35 Lt C 128+48			b
89	a	1																																REMOVE DI	61.09 Lt C 132+34	D-11	89	a
	b			181																														REMOVE Culv	61.09 Lt C 132+34 to 60.21 Rt C 132+89			b
	c				59																													REMOVE DD	60.21 Rt C 132+89 to 103.07 Rt C 132+97			c
		3		300	106						53			95			157		24							534	200							SHEET TOTAL				

2

2 REVISED PER ADDENDUM No. 2 DATED FEBRUARY 28, 2011

DRAINAGE QUANTITIES

DQ-39

STATE OF CALIFORNIA - DEPARTMENT OF TRANSPORTATION
Caltrans

JENNIFER ABRAMS | REVISED BY | J.ABRAMS
CHRIS SEWELL | DATE REVISED | 06/09/10
CALCULATED-DESIGNED BY
CHECKED BY
CONSULTANT FUNCTIONAL SUPERVISOR
HAN-BIN LIANG

LAST REVISION 06-09-10 | DATE PLOTTED => 23-FEB-2011 | TIME PLOTTED => 17:33

Dist	COUNTY	ROUTE	POST MILES TOTAL PROJECT	SHEET No.	TOTAL SHEETS
04	SCI	17	0.0/2.8	144	278

REGISTERED CIVIL ENGINEER 06/09/2010 DATE

9-7-10
PLANS APPROVAL DATE

REGISTERED PROFESSIONAL ENGINEER CHRISTOPHER SEWELL No. C 64807 Exp. 6/30/11 CIVIL STATE OF CALIFORNIA

THE STATE OF CALIFORNIA OR ITS OFFICERS OR AGENTS SHALL NOT BE RESPONSIBLE FOR THE ACCURACY OR COMPLETENESS OF SCANNED COPIES OF THIS PLAN SHEET.

WRECO
1243 ALPINE ROAD
SUITE 108
WALNUT CREEK, CA 94596

CALTRANS
111 GRAND AVENUE
OAKLAND, CA 94612

DRAINAGE QUANTITIES

DRAINAGE SYSTEM No.	DRAINAGE UNIT	CSP FES 12"	CSP FES 18"	CSP FES 24"	CSP FES 30"	CSP FES 36"	48" WSP	MINOR Conc MINOR STRUCTURE	MINOR Conc Misc CONSTRUCTION	Conc BACKFILL (RAPID STRENGTH Conc)	Misc IRON AND STEEL	PIPE ANCHOR ASSEMBLY	ROCK SLOPE PROTECTION (BACKING No. 3, METHOD B)	ROCK SLOPE PROTECTION (BACKING No. 2, METHOD B)	ROCK SLOPE PROTECTION (FACING, METHOD B)	ROCK SLOPE PROTECTION (LIGHT, METHOD B)	ROCK SLOPE PROTECTION FABRIC	CULVERT CONTACT GROUTING	CONTACT GROUT PORTS	CHECKERED PLATE (N)	BOLTDOWN COVER (N)	24" TO 18" ECCENTRIC REDUCER Conc COLLAR	FRAME & COVER OR FRAME & GRATE (N) G2 MH	FRAME & COVER OR FRAME & GRATE (N) Maint. CLEANOUT (17½" Dia)	FRAME & COVER OR FRAME & GRATE (N) TYPE 24-12X	FRAME & COVER OR FRAME & GRATE (N) OS PLATE	PIPE JOINT CLASSIFICATION (N)	MAXIMUM COVER (N)	HEIGHT OF DI/MH (N)	DESCRIPTION	STATION	DRAINAGE PLAN No.	DRAINAGE SYSTEM No.	DRAINAGE UNIT
		EA	EA	EA	EA	EA	FT	CY	CY	CY	LB	EA	CY	CY	CY	CY	SQYD	CY	EA	EA	EA	EA	EA	EA	EA	EA		LF	LF					
85	a							0.28			69										1			1					2.0	Maint CLEANOUT	1.92 Lt C 119+63	D-10	85	a
	b																											0.21		18" ASP	1.92 Lt C 119+63 to 1.92 Lt C 122+00			b
	c							0.28			69										1			1					2.0	Maint CLEANOUT	1.92 Lt C 122+00			c
	d																											1.00		18" ASP	1.92 Lt C 122+00 to 3.84 Lt C 125+00			d
	e							1.44			435										1		1						3.5	G2 MH w/ BOLTDOWN COVER	3.84 Lt C 125+00			e
	f																										PJ	2.00		18" APC (A) w/ Conc Bkf	3.84 Lt C 125+00 to 40.64 Lt C 125+40			f
	g																	2.55 ~~1.32~~												18" APL	40.64 Lt C 125+40 to 150.34 Rt C 125+41			g
	h							2.13			174															1			5.6	OS DI w/ 2 SIDE OPENINGS	150.34 Rt C 125+41			h
	i							1.24			239														1				3.0	GO DI	27.27 Rt C 124+80			i
	j								4																		DD	2.00		12" CSP DD	27.27 Rt C 124+80 to 120.10 Rt C 124+76			j
	k								2																		DD	2.00		24" CSP	110.67 Rt C 124+56 to 120.10 Rt C 124+76			k
	l							2.46			435												1						5.1	G2 MH	120.10 Rt C 124+76			l
	m																										DD	2.10		24" APC (B)	120.10 Rt C 124+76 to 150.34 Rt C 125+41			m
86	a																													REMOVE DI	30.03 Rt C 126+51	D-11	86	a
	b																													REMOVE DD	30.03 Rt C 126+51 to 61.13 Rt C 126+85			b
87	a							1.24			239														1				3.0	GO DI	30.03 Rt C 126+51	D-11	87	a
	b								4			2															DD	2.00		12" CSP DD w/ TEE w/ ANCHOR ASSEMBLIES	30.03 Rt C 126+51 to 61.13 Rt C 126+85			b
88	a																													REMOVE Culv	34.35 Lt C 128+48 to 79.94 Rt C 128+15	D-11	88	a
	b																													REMOVE DI	34.35 Lt C 128+48			b
89	a																													REMOVE DI	61.09 Lt C 132+34	D-11	89	a
	b																													REMOVE Culv	61.09 Lt C 132+34 to 60.21 Rt C 132+89			b
	c																													REMOVE DD	60.21 Rt C 132+89 to 103.07 Rt C 132+97			c
								9.07			1660	2						2.55 ~~1.32~~			3		2	2	2	1				SHEET TOTAL				
									10																									

2 2

2 REVISED PER ADDENDUM No. 2 DATED FEBRUARY 28, 2011

DRAINAGE QUANTITIES
DQ-40

STATE OF CALIFORNIA - DEPARTMENT OF TRANSPORTATION
Caltrans

CONSULTANT FUNCTIONAL SUPERVISOR	CALCULATED-DESIGNED BY	REVISED BY	DATE REVISED
HAN-BIN LIANG	JENNIFER ABRAMS	J.ABRAMS	06/09/10
	CHRIS SEWELL		
	CHECKED BY		

LAST REVISION 06-09-10 | DATE PLOTTED => 23-FEB-2011 | TIME PLOTTED => 10:27

Dist	COUNTY	ROUTE	POST MILES TOTAL PROJECT	SHEET No.	TOTAL SHEETS
04	SCI	17	0.0/2.8	145	278

REGISTERED CIVIL ENGINEER 06/09/2010 DATE

9-7-10
PLANS APPROVAL DATE

REGISTERED PROFESSIONAL ENGINEER CHRISTOPHER SEWELL No. C 64807 Exp. 6/30/11 CIVIL STATE OF CALIFORNIA

THE STATE OF CALIFORNIA OR ITS OFFICERS OR AGENTS SHALL NOT BE RESPONSIBLE FOR THE ACCURACY OR COMPLETENESS OF SCANNED COPIES OF THIS PLAN SHEET.

WRECO
1243 ALPINE ROAD
SUITE 108
WALNUT CREEK, CA 94596

CALTRANS
111 GRAND AVENUE
OAKLAND, CA 94612

DRAINAGE QUANTITIES

DRAINAGE SYSTEM No.	DRAINAGE UNIT	REMOVE INLET	REMOVE MANHOLE	REMOVE CULVERT	REMOVE DD	REMOVE CONCRETE	REMOVE HEADWALL	ABANDON CULVERT	SAND BACKFILL	ALTERNATIVE PIPE CULVERT 12" (TYPE A)	18" (TYPE A)	18" (TYPE B)	24" (TYPE A)	24" (TYPE B)	30" (TYPE A)	30" (TYPE B)	CSP DD 12"	18"	24"	30"	36"	JACK 24" RCP	CSP 42"	48"	18" CURED-IN-PLACE PIPELINER (CIPP)	18" ASP	ALTERNATIVE PIPELINER 18"	24"	30"	36"	REHAB RISER METHOD A	METHOD B	METHOD C	DESCRIPTION	STATION	DRAINAGE PLAN No.	DRAINAGE SYSTEM No.	DRAINAGE UNIT
		EA	EA	FT	FT	CY	EA	LF	CY	FT	FT	FT	FT	FT	FT	FT	FT	FT	FT	FT	FT	FT	FT	FT	FT	FT	FT	FT	FT	FT	FT	FT	FT					
90	a																																	Maint CLEANOUT	1.96 Lt C 126+80	D-11	90	a
	b																									218								18" ASP	1.96 Lt C 126+80 to 1.00 Rt C 129+00			b
	c																																	G2 MH w/ BOLTDOWN COVER	1.00 Rt C 129+00			c
	d										62																							18" APC (A) w/ Conc Bkf	1.00 Rt C 129+00 to 39.14 Lt C 129+50			d
	e																																	GO DI	39.14 Lt C 129+50			e
	f												276																					24" APC (A) w/ Conc Bkf	39.14 Lt C 129+50 to 61.09 Lt C 132+34			f
	g																																	GO DI	61.09 Lt C 132+34			g
	h															131																		30" APC (B) w/ Conc Bkf	61.09 Lt C 132+34 to 60.21 Rt C 132+89			h
	i																																	G2 MH	60.21 Rt C 132+89			i
	j																		56															24" CSP DD w/ TEE w/ ANCHOR ASSEMBLIES	60.21 Rt C 132+89 to 101.24 Rt C 132+97			j
	k																																	RSP	101.24 Rt C 132+97			k
	l																																	GO DI	34.35 Lt C 128+48			l
	m										49																							18" APC (A) w/ Conc Bkf	34.35 Lt C 128+48 to 36.91 Lt C 129+00			m
	n																																	GO DI	36.91 Lt C 129+00			n
	o										47																							18" APC(A) w/ Conc Bkf	36.91 Lt C 129+00 to 39.14 Lt C 129+50			o
91	a					1.0																												REMOVE ACOD	39.49 Lt C 136+33 to 58.21 Lt C 136+90	D-11	91	a
92	a																																	G2 DI w/ PCC APRON	55.14 Lt C 135+00	D-11	92	a
	b											128																						18" APC (B) w/ Conc Bkf	55.14 Lt C 135+00 to 41.75 Lt C 136+38			b
	c																																	GO DI	41.75 Lt C 136+38			c
	d																		66															24" CSP DD w/ TEE w/ ANCHOR ASSEMBLIES	41.75 Lt C 136+38 to 58.21 Lt C 136+90			d
	e																																	RSP	58.21 Lt C 136+90			e
93	a				20																													REMOVE DD	34.04 Rt C 138+89 to 66.67 Rt C 138+76	D-11	93	a
	b				32																													REMOVE DD	67.74 Rt C 138+76 to 83.67 Rt C 138+75			b
					52	1					158	128	276			131			122							218								SHEET TOTAL				

2

2 REVISED PER ADDENDUM No. 2 DATED FEBRUARY 28, 2011

DRAINAGE QUANTITIES

DQ-41

STATE OF CALIFORNIA - DEPARTMENT OF TRANSPORTATION
Caltrans

CONSULTANT FUNCTIONAL SUPERVISOR: HAN-BIN LIANG
CALCULATED-DESIGNED BY: JENNIFER ABRAMS
CHECKED BY: CHRIS SEWELL
REVISED BY: J.ABRAMS
DATE REVISED: 06/09/10

LAST REVISION 06-09-10
DATE PLOTTED => 23-FEB-2011
TIME PLOTTED => 17:33

Dist	COUNTY	ROUTE	POST MILES TOTAL PROJECT	SHEET No.	TOTAL SHEETS
04	SCI	17	0.0/2.8	146	278

REGISTERED CIVIL ENGINEER 06/09/2010 DATE

9-7-10
PLANS APPROVAL DATE

REGISTERED PROFESSIONAL ENGINEER CHRISTOPHER SEWELL No. C 64807 Exp. 6/30/11 CIVIL STATE OF CALIFORNIA

THE STATE OF CALIFORNIA OR ITS OFFICERS OR AGENTS SHALL NOT BE RESPONSIBLE FOR THE ACCURACY OR COMPLETENESS OF SCANNED COPIES OF THIS PLAN SHEET.

WRECO
1243 ALPINE ROAD
SUITE 108
WALNUT CREEK, CA 94596

CALTRANS
111 GRAND AVENUE
OAKLAND, CA 94612

DRAINAGE QUANTITIES

DRAINAGE SYSTEM No.	DRAINAGE UNIT	CSP FES 12"	CSP FES 18"	CSP FES 24"	CSP FES 30"	CSP FES 36"	48" WSP	MINOR Conc: MINOR STRUCTURE	MINOR Conc: Misc CONSTRUCTION	Conc BACKFILL (RAPID STRENGTH Conc)	Misc IRON AND STEEL	PIPE ANCHOR ASSEMBLY	ROCK SLOPE PROTECTION (BACKING No. 3, METHOD B)	ROCK SLOPE PROTECTION (BACKING No. 2, METHOD B)	ROCK SLOPE PROTECTION (FACING, METHOD B)	ROCK SLOPE PROTECTION (LIGHT, METHOD B)	ROCK SLOPE PROTECTION FABRIC	CULVERT CONTACT GROUTING	~~CONTACT GROUT PORTS~~	CHECKERED PLATE (N)	BOLTDOWN COVER (N)	24" TO 18" ECCENTRIC REDUCER Conc COLLAR	FRAME & COVER OR FRAME & GRATE (N): G2 MH	FRAME & COVER OR FRAME & GRATE (N): Maint CLEANOUT (17½" Dia)	FRAME & COVER OR FRAME & GRATE (N): TYPE 24-12X	FRAME & COVER OR FRAME & GRATE (N): OS PLATE	PIPE JOINT CLASSIFICATION (N)	MAXIMUM COVER (N)	HEIGHT OF DI/MH (N)	DESCRIPTION	STATION	DRAINAGE PLAN No.	DRAINAGE SYSTEM No.	DRAINAGE UNIT
		EA	EA	EA	EA	EA	FT	CY	CY	CY	LB	EA	CY	CY	CY	CY	SQYD	CY	EA	EA	EA	EA	EA	EA	EA	EA		LF	LF					
90	a							0.28			69										1			1				2.0	Maint CLEANOUT	1.96 Lt C 126+80	D-11	90	a
	b																										1.00		18" ASP	1.96 Lt C 126+80 to 1.00 Rt C 129+00			b
	c							1.44			435										1		1					3.5	G2 MH w/ BOLTDOWN COVER	1.00 Rt C 129+00			c
	d									23																PJ	2.00		18" APC (A) w/ Conc Bkf	1.00 Rt C 129+00 to 39.14 Lt C 129+50			d
	e							1.51			239														1			4.1	GO DI	39.14 Lt C 129+50			e
	f									127																PJ	2.10		24" APC (A) w/ Conc Bkf	39.14 Lt C 129+50 to 61.09 Lt C 132+34			f
	g							1.61			239														1			4.5	GO DI	61.09 Lt C 132+34			g
	h									69																SJ	3.90		30" APC (B) w/ Conc Bkf	61.09 Lt C 132+34 to 60.21 Rt C 132+89			h
	i							2.32			435												1					4.7	G2 MH	60.21 Rt C 132+89			i
	j											5 ~~2~~														DD	0.00		24" CSP DD w/ TEE w/ ANCHOR ASSEMBLIES	60.21 Rt C 132+89 to 101.24 Rt C 132+97			j
	k														7.06		25.6												RSP	101.24 Rt C 132+97			k
	l							1.36			239														1			3.5	GO DI	34.35 Lt C 128+48			l
	m									18																PJ	2.00		18" APC (A) w/ Conc Bkf	34.35 Lt C 128+48 to 36.91 Lt C 129+00			m
	n							1.39			239														1			3.6	GO DI	36.91 Lt C 129+00			n
	o									18																PJ	2.10		18" APC(A) w/ Conc Bkf	36.91 Lt C 129+00 to 39.14 Lt C 129+50			o
91	a																												REMOVE ACOD	39.49 Lt C 136+33 to 58.21 Lt C 136+90	D-11	91	a
92	a							1.57	1.19		239														1			4.0	G2 DI w/ PCC APRON	55.14 Lt C 135+00	D-11	92	a
	b									53																PJ	2.00		18" APC (B) w/ Conc Bkf	55.14 Lt C 135+00 to 41.75 Lt C 136+38			b
	c							1.51			239														1			4.1	GO DI	41.75 Lt C 136+38			c
	d											5 ~~2~~														DD	2.10		24" CSP DD w/ TEE w/ ANCHOR ASSEMBLIES	41.75 Lt C 136+38 to 58.21 Lt C 136+90			d
	e														7.06		25.6												RSP	58.21 Lt C 136+90			e
93	a																												REMOVE DD	34.04 Rt C 138+89 to 66.67 Rt C 138+76	D-11	93	a
	b																												REMOVE DD	67.74 Rt C 138+76 to 83.67 Rt C 138+75			b
								12.99	1.19	308	2373	10 ~~4~~			14.12		51.2				2		2	1	6				SHEET TOTAL				

2 2

2 REVISED PER ADDENDUM No. 2 DATED FEBRUARY 28, 2011

DRAINAGE QUANTITIES

DQ-42

STATE OF CALIFORNIA - DEPARTMENT OF TRANSPORTATION
Caltrans

CONSULTANT FUNCTIONAL SUPERVISOR: HAN-BIN LIANG

CALCULATED-DESIGNED BY: JENNIFER ABRAMS
CHECKED BY: CHRIS SEWELL

REVISED BY: J.ABRAMS
DATE REVISED: 06/09/10

LAST REVISION 06-09-10
DATE PLOTTED => 23-FEB-2011
TIME PLOTTED => 10:27

Dist	COUNTY	ROUTE	POST MILES TOTAL PROJECT	SHEET No.	TOTAL SHEETS
04	SCI	17	0.0/2.8	147	278

REGISTERED CIVIL ENGINEER DATE 06/09/2010

PLANS APPROVAL DATE 9-7-10

REGISTERED PROFESSIONAL ENGINEER CHRISTOPHER SEWELL No. C 64807 Exp. 6/30/11 CIVIL STATE OF CALIFORNIA

THE STATE OF CALIFORNIA OR ITS OFFICERS OR AGENTS SHALL NOT BE RESPONSIBLE FOR THE ACCURACY OR COMPLETENESS OF SCANNED COPIES OF THIS PLAN SHEET.

WRECO
1243 ALPINE ROAD
SUITE 108
WALNUT CREEK, CA 94596

CALTRANS
111 GRAND AVENUE
OAKLAND, CA 94612

DRAINAGE QUANTITIES

DRAINAGE SYSTEM No.	DRAINAGE UNIT	REMOVE INLET	REMOVE MANHOLE	REMOVE CULVERT	REMOVE DD	REMOVE CONCRETE	REMOVE HEADWALL	ABANDON CULVERT	SAND BACKFILL	ALTERNATIVE PIPE CULVERT 12" (TYPE A)	18" (TYPE A)	18" (TYPE B)	24" (TYPE A)	24" (TYPE B)	30" (TYPE A)	30" (TYPE B)	CSP DD 12"	18"	24"	30"	36"	JACK 24" RCP	CSP 42"	48"	18" CURED-IN-PLACE PIPELINER (CIPP)	18" ASP	ALTERNATIVE PIPELINER 18"	24"	30"	36"	REHAB RISER METHOD A	METHOD B	METHOD C	DESCRIPTION	STATION	DRAINAGE PLAN No.	DRAINAGE SYSTEM No.	DRAINAGE UNIT
		EA	EA	FT	FT	CY	EA	LF	CY	FT	FT	FT	FT	FT	FT	FT	FT	FT	FT	FT	FT	FT	FT	FT	FT	FT	FT	FT	FT	FT	FT	FT	FT					
94	a																																	GO DI	33.27 Lt C 138+78	D-11	94	a
	b																54																	12" CSP DD	33.27 Lt C 138+78 to 83.66 Lt C 138+64			b
	c																																14	REHAB RISER, METHOD C	83.66 Lt C 138+64			c
95	a				102																													REMOVE DD	87.07 Rt C 138+21 to 173.22 Rt C 138+02	D-11	95	a
96	a																				111													36" CSP DD w/ TEE w/ ANCHOR ASSEMBLIES	87.07 Rt C 138+21 to 173.22 Rt C 138+02	D-11	96	a
	b																																	RSP	173.22 Rt C 138+02			b
97	a	1																																REMOVE DI	34.60 Lt C 142+17	D-12	97	a
	b			44																														REMOVE Culv (PORTION)	34.60 Lt C 142+17 to 4.83 Rt C 142+40			b
	c							57	3.73																									ABANDON Culv	4.83 Rt C 142+40 to 66.41 Rt C 142+77			c
	d			31																														REMOVE Culv (PORTION)	39.81 Rt C 142+60 to 66.41 Rt C 142+76			d
	e	1																																REMOVE DI	66.41 Rt C 142+77			e
	f				102																													REMOVE DD	66.41 Rt C 142+77 to 130.06 Rt C 143+47			f
	g	1																																REMOVE DI	130.06 Rt C 143+47			g
	h			20																														REMOVE Culv	130.06 Rt C 143+47 to 147.27 Rt C 143+59			h
98	a																																	G2 DI w/ PCC APRON	58.09 Lt C 142+17	D-12	98	a
	b												23																					24" APC (A)	58.09 Lt C 142+17 to 34.60 Lt C 142+17			b
	c																																	GO DI	34.60 Lt C 142+17			c
	d															83																		30" APC (B) w/ Conc Bkf	34.60 Lt C 142+17 to 39.81 Rt C 142+61			d
	e																																	G2 MH	39.81 Rt C 142+61			e
	f														32																			30" APC (A)	39.81 Rt C 142+61 to 66.41 Rt C 142+77			f
	g																																	G2 MH	66.41 Rt C 142+77			g
	h																			102														30" CSP DD	66.41 Rt C 142+77 to 130.06 Rt C 143+47			h
	i																																	OS DI w/ 2 SIDE OPENINGS	130.06 Rt C 143+47			i
	j														20																			30" APC (A)	130.06 Rt C 143+47 to 147.27 Rt C 143+59			j
	k																																	30" CSP FES	147.27 Rt C 143+59			k
	l																																	RSP	147.27 Rt C 143+59			l
		3		95	204			57	3.73				23		52	83	54			102	111												14	SHEET TOTAL				

2

2 REVISED PER ADDENDUM No. 2 DATED FEBRUARY 28, 2011

DRAINAGE QUANTITIES

DQ-43

STATE OF CALIFORNIA - DEPARTMENT OF TRANSPORTATION
Caltrans

CONSULTANT FUNCTIONAL SUPERVISOR: HAN-BIN LIANG
CALCULATED-DESIGNED BY: JENNIFER ABRAMS
CHECKED BY: CHRIS SEWELL
REVISED BY: J.ABRAMS
DATE REVISED: 06/09/10

LAST REVISION 06-09-10
DATE PLOTTED => 23-FEB-2011
TIME PLOTTED => 17:33

Dist	COUNTY	ROUTE	POST MILES TOTAL PROJECT	SHEET No.	TOTAL SHEETS
04	SCI	17	0.0/2.8	148	278

REGISTERED CIVIL ENGINEER 06/09/2010 DATE

9-7-10
PLANS APPROVAL DATE

REGISTERED PROFESSIONAL ENGINEER CHRISTOPHER SEWELL No. C 64807 Exp. 6/30/11 CIVIL STATE OF CALIFORNIA

THE STATE OF CALIFORNIA OR ITS OFFICERS OR AGENTS SHALL NOT BE RESPONSIBLE FOR THE ACCURACY OR COMPLETENESS OF SCANNED COPIES OF THIS PLAN SHEET.

WRECO
1243 ALPINE ROAD
SUITE 108
WALNUT CREEK, CA 94596

CALTRANS
111 GRAND AVENUE
OAKLAND, CA 94612

DRAINAGE QUANTITIES

DRAINAGE SYSTEM No.	DRAINAGE UNIT	CSP FES 12" EA	CSP FES 18" EA	CSP FES 24" EA	CSP FES 30" EA	CSP FES 36" EA	48" WSP FT	MINOR CONC. MINOR STRUCTURE CY	MINOR CONC. MISC. CONSTRUCTION CY	CONC. BACKFILL (RAPID STRENGTH CONC.) CY	MISC. IRON AND STEEL LB	PIPE ANCHOR ASSEMBLY EA	ROCK SLOPE PROTECTION (BACKING NO. 3, METHOD B) CY	ROCK SLOPE PROTECTION (BACKING NO. 2, METHOD B) CY	ROCK SLOPE PROTECTION (FACING, METHOD B) CY	ROCK SLOPE PROTECTION (LIGHT, METHOD B) CY	ROCK SLOPE PROTECTION FABRIC YD²	CULVERT CONTACT GROUTING CY	CONTACT GROUT PORTS EA	CHECKERED PLATE (N) EA	BOLTDOWN COVER (N) EA	24" TO 18" ECCENTRIC REDUCER Conc COLLAR EA	FRAME & COVER OR FRAME & GRATE (N) G2 MH EA	FRAME & COVER OR FRAME & GRATE (N) Maint. CLEANOUT (17½" Dia.) EA	FRAME & COVER OR FRAME & GRATE (N) TYPE 24-12X EA	FRAME & COVER OR FRAME & GRATE (N) OS PLATE EA	PIPE JOINT CLASSIFICATION (N)	MAXIMUM COVER (N) LF	HEIGHT OF DI/MH (N) LF	DESCRIPTION	STATION	DRAINAGE PLAN No.	DRAINAGE SYSTEM No.	DRAINAGE UNIT
94	a							1.24			239														1				3.0	GO DI	33.27 Lt C 138+78	D-11	94	a
	b											3															DD	2.00		12" CSP DD	33.27 Lt C 138+78 to 83.66 Lt C 138+64			b
	c																													REHAB RISER, METHOD C	83.66 Lt C 138+64			c
95	a																													REMOVE DD	87.07 Rt C 138+21 to 173.22 Rt C 138+02	D-11	95	a
96	a											~~6~~ 2															DD	0.00		36" CSP DD w/ TEE w/ ANCHOR ASSEMBLIES	87.07 Rt C 138+21 to 173.22 Rt C 138+02	D-11	96	a
	b														23.79		61.2													RSP	173.22 Rt C 138+02			b
97	a																													REMOVE DI	34.60 Lt C 142+17	D-12	97	a
	b																													REMOVE Culv (PORTION)	34.60 Lt C 142+17 to 4.83 Rt C 142+40			b
	c																													ABANDON Culv	4.83 Rt C 142+40 to 66.41 Rt C 142+77			c
	d																													REMOVE Culv (PORTION)	39.81 Rt C 142+60 to 66.41 Rt C 142+76			d
	e																													REMOVE DI	66.41 Rt C 142+77			e
	f																													REMOVE DD	66.41 Rt C 142+77 to 130.06 Rt C 143+47			f
	g																													REMOVE DI	130.06 Rt C 143+47			g
	h																													REMOVE Culv	130.06 Rt C 143+47 to 147.27 Rt C 143+59			h
98	a							1.44	1.19		239														1				3.5	G2 DI w/ PCC APRON	58.09 Lt C 142+17	D-12	98	a
	b																										DD	2.00		24" APC (A)	58.09 Lt C 142+17 to 34.60 Lt C 142+17			b
	c							2.24			239														1				7.1	GO DI	34.60 Lt C 142+17			c
	d									75																	SJ	5.40		30" APC (B) w/ Conc Bkf	34.60 Lt C 142+17 to 39.81 Rt C 142+61			d
	e							2.75			435												1						5.9	G2 MH	39.81 Rt C 142+61			e
	f																										DD	1.10		30" APC (A)	39.81 Rt C 142+61 to 66.41 Rt C 142+77			f
	g							2.29			435												1						4.6	G2 MH	66.41 Rt C 142+77			g
	h											4															DD	2.00		30" CSP DD	66.41 Rt C 142+77 to 130.06 Rt C 143+47			h
	i							1.83			174															1			4.5	OS DI w/ 2 SIDE OPENINGS	130.06 Rt C 143+47			i
	j																												2.3	30" APC (A)	130.06 Rt C 143+47 to 147.27 Rt C 143+59			j
	k				1																									30" CSP FES	147.27 Rt C 143+59			k
	l														8.57		27.7													RSP	147.27 Rt C 143+59			l
					1			11.79	1.19	75	1761	~~13~~ 2			32.36		88.9						2		3	1				SHEET TOTAL				

2 2

2 REVISED PER ADDENDUM No. 2 DATED FEBRUARY 28, 2011

DRAINAGE QUANTITIES

DQ-44

STATE OF CALIFORNIA - DEPARTMENT OF TRANSPORTATION
Caltrans

CONSULTANT FUNCTIONAL SUPERVISOR: HAN-BIN LIANG
CALCULATED-DESIGNED BY: JENNIFER ABRAMS
CHECKED BY: CHRIS SEWELL
REVISED BY: J.ABRAMS
DATE REVISED: 06/09/10

LAST REVISION 06-09-10
DATE PLOTTED => 23-FEB-2011
TIME PLOTTED => 12:57

Dist	COUNTY	ROUTE	POST MILES TOTAL PROJECT	SHEET No.	TOTAL SHEETS
04	SCI	17	0.0/2.8	149	278

REGISTERED CIVIL ENGINEER DATE 06/09/2010

PLANS APPROVAL DATE 9-7-10

REGISTERED PROFESSIONAL ENGINEER CHRISTOPHER SEWELL No. C 64807 Exp. 6/30/11 CIVIL STATE OF CALIFORNIA

THE STATE OF CALIFORNIA OR ITS OFFICERS OR AGENTS SHALL NOT BE RESPONSIBLE FOR THE ACCURACY OR COMPLETENESS OF SCANNED COPIES OF THIS PLAN SHEET.

WRECO
1243 ALPINE ROAD
SUITE 108
WALNUT CREEK, CA 94596

CALTRANS
111 GRAND AVENUE
OAKLAND, CA 94612

DRAINAGE QUANTITIES

DRAINAGE SYSTEM No.	DRAINAGE UNIT	REMOVE INLET	REMOVE MANHOLE	REMOVE CULVERT	REMOVE DD	REMOVE CONCRETE	REMOVE HEADWALL	ABANDON CULVERT	SAND BACKFILL	ALTERNATIVE PIPE CULVERT 12" (TYPE A)	18" (TYPE A)	18" (TYPE B)	24" (TYPE A)	24" (TYPE B)	30" (TYPE A)	30" (TYPE B)	CSP DD 12"	18"	24"	30"	36"	JACK 24" RCP	CSP 42"	48"	18" ASP	ALTERNATIVE PIPELINER 18"	24"	30"	36"	REHAB RISER METHOD A	METHOD B	METHOD C	DESCRIPTION	STATION	DRAINAGE PLAN No.	DRAINAGE SYSTEM No.	DRAINAGE UNIT
		EA	EA	FT	FT	CY	EA	LF	CY	FT	FT	FT	FT	FT	FT	FT	FT	FT	FT	FT	FT	FT	FT	FT	FT	FT	FT	FT	FT	FT	FT	FT					
99	a			17																													REMOVE Culv	45.14 Lt C 146+25 to 32.93 Lt C 146+25	D-12	99	a
	b			90																													REMOVE Culv	32.93 Lt C 146+25 to 57.54 Rt C 146+47			b
100	a																																GO DI	42.12 Lt C 144+95	D-12	100	a
	b										128																						18" APC (A) w/ Conc Bkf	42.12 Lt C 144+95 to 32.93 Lt C 146+25			b
	c																																18" CSP FES	45.14 Lt C 146+25			c
	d																	17															18" CSP DD	45.14 Lt C 146+25 to 32.93 Lt C 146+25			d
	e										72																						18" APC (A) w/ Conc Bkf	32.93 Lt C 146+25 to 39.50 Rt C 146+42			e
	f																																G2 MH	39.50 Rt C 146+42			f
	g																	23															18" CSP DD w/ TEE w/ ANCHOR ASSEMBLIES	39.50 Rt C 146+42 to 57+54 Rt C 146+47			g
	h																																RSP	57.54 Rt C 146+47			h
101	a			8																													REMOVE Culv	56.94 Lt C 149+64	D-12	101	a
	b			35																													REMOVE Culv	31.89 Lt C 149+41 to 56.94 Lt C 149+64			b
102	a																																GO DI	31.89 Lt C 149+41	D-12	102	a
	b																35																12" CSP DD	31.89 Lt C 149+41 to 56.94 Lt C 149+64			b
	c																						4 ~~5~~										48" RISER	56.94 Lt C 149+64			c
	d																									185							24" APL	56.94 Lt C 149+64 to 127.14 Rt C 149+69			d
	e																																24" CSP FES	127.14 Rt C 149+69			e
	f																																RSP	127.14 Rt C 149+69			f
				150							200						35	40						~~5~~		185							SHEET TOTAL				
		49	3	3715	2021	1.0	1	1225	117.51	38	5479	270	1947	325	52	290	1738	539	323	102	216	197	3	4 ~~6~~	9760	837	1287	402	736	62	31	34	GRAND TOTAL				

2

2 REVISED PER ADDENDUM No. 2 DATED FEBRUARY 28, 2011

DRAINAGE QUANTITIES

DQ-45

STATE OF CALIFORNIA - DEPARTMENT OF TRANSPORTATION

Caltrans

CONSULTANT FUNCTIONAL SUPERVISOR: HAN-BIN LIANG

CALCULATED-DESIGNED BY: JENNIFER ABRAMS

CHECKED BY: CHRIS SEWELL

REVISED BY: J.ABRAMS

DATE REVISED: 06/09/10

LAST REVISION 08-19-10

DATE PLOTTED => 23-FEB-2011
TIME PLOTTED => 17:33

Dist	COUNTY	ROUTE	POST MILES TOTAL PROJECT	SHEET No.	TOTAL SHEETS
04	SCI	17	0.0/2.8	150	278

REGISTERED CIVIL ENGINEER 06/09/2010 DATE

9-7-10
PLANS APPROVAL DATE

REGISTERED PROFESSIONAL ENGINEER CHRISTOPHER SEWELL No. C 64807 Exp. 6/30/11 CIVIL STATE OF CALIFORNIA

THE STATE OF CALIFORNIA OR ITS OFFICERS OR AGENTS SHALL NOT BE RESPONSIBLE FOR THE ACCURACY OR COMPLETENESS OF SCANNED COPIES OF THIS PLAN SHEET.

WRECO
1243 ALPINE ROAD
SUITE 108
WALNUT CREEK, CA 94596

CALTRANS
111 GRAND AVENUE
OAKLAND, CA 94612

DRAINAGE QUANTITIES

DRAINAGE SYSTEM No.	DRAINAGE UNIT	CSP FES 12" EA	CSP FES 18" EA	CSP FES 24" EA	CSP FES 30" EA	CSP FES 36" EA	48" WSP FT	MINOR Conc MINOR STRUCTURE CY	MINOR Conc Misc CONSTRUCTION CY	Conc BACKFILL (RAPID STRENGTH Conc) CY	Misc IRON AND STEEL LB	PIPE ANCHOR ASSEMBLY EA	ROCK SLOPE PROTECTION (BACKING No. 3, METHOD B) CY	ROCK SLOPE PROTECTION (BACKING No. 2, METHOD B) CY	ROCK SLOPE PROTECTION (FACING, METHOD B) CY	ROCK SLOPE PROTECTION (LIGHT, METHOD B) CY	ROCK SLOPE PROTECTION FABRIC SQYD	CULVERT CONTACT GROUTING CY	~~CONTACT GROUT PORTS EA~~	CHECKERED PLATE (N) EA	BOLTDOWN COVER (N) EA	24" TO 18" ECCENTRIC REDUCER Conc COLLAR EA	FRAME & COVER OR FRAME & GRATE (N) G2 MH EA	FRAME & COVER OR FRAME & GRATE (N) Maint. CLEANOUT (17½" Dia) EA	FRAME & COVER OR FRAME & GRATE (N) TYPE 24-12X EA	FRAME & COVER OR FRAME & GRATE (N) OS PLATE EA	PIPE JOINT CLASSIFICATION (N)	MAXIMUM COVER (N) LF	HEIGHT OF DI/MH (N) LF	DESCRIPTION	STATION	DRAINAGE PLAN No.	DRAINAGE SYSTEM No.	DRAINAGE UNIT
99	a																													REMOVE Culv	45.14 Lt C 146+25 to 32.93 Lt C 146+25	D-12	99	a
	b																													REMOVE Culv	32.93 Lt C 146+25 to 57.54 Rt C 146+47			b
100	a							1.36			239														1				3.5	GO DI	42.12 Lt C 144+95	D-12	100	a
	b									47																	PJ	2.00		18" APC (A) w/ Conc Bkf	42.12 Lt C 144+95 to 32.93 Lt C 146+25			b
	c		1																											18" CSP FES	45.14 Lt C 146+25			c
	d											2															DD	1.90		18" CSP DD	45.14 Lt C 146+25 to 32.93 Lt C 146+25			d
	e									30																	SJ	2.87		18" APC (A) w/ Conc Bkf	32.93 Lt C 146+25 to 39.50 Rt C 146+42			e
	f							2.18			435												1						4.3	G2 MH	39.50 Rt C 146+42			f
	g											4 ~~2~~															DD	0.00		18" CSP DD w/ TEE w/ ANCHOR ASSEMBLIES	39.50 Rt C 146+42 to 57+54 Rt C 146+47			g
	h													2.71			12.7													RSP	57.54 Rt C 146+47			h
101	a																													REMOVE Culv	56.94 Lt C 149+64	D-12	101	a
	b																													REMOVE Culv	31.89 Lt C 149+41 to 56.94 Lt C 149+64			b
102	a							1.24			239														1				3.0	GO DI	31.89 Lt C 149+41	D-12	102	a
	b										413	2															DD	2.00		12" CSP DD	31.89 Lt C 149+41 to 56.94 Lt C 149+64			b
	c										~~383~~																			48" RISER	56.94 Lt C 149+64			c
	d																	3.03 ~~120~~												24" APL	56.94 Lt C 149+64 to 127.14 Rt C 149+69			d
	e			1																										24" CSP FES	127.14 Rt C 149+69			e
	f										1326				5.49		19.6													RSP	127.14 Rt C 149+69			f
			1	1				4.78		77	~~129~~	8 ~~2~~		2.7	5.49		32.3	3.03 ~~120~~					1		2					SHEET TOTAL				
		1	11	4	2	1	31	216.13	2.38	2576	~~40709~~ 40739	175 ~~56~~	18.43	25.78	125.99	26.98	724.6	57.15 ~~2152~~	2	51	1	32	31	86	10					GRAND TOTAL				

2 2 2

2 REVISED PER ADDENDUM No. 2 DATED FEBRUARY 28, 2011

DRAINAGE QUANTITIES

DQ-46

STATE OF CALIFORNIA - DEPARTMENT OF TRANSPORTATION
Caltrans

CONSULTANT FUNCTIONAL SUPERVISOR: HAN-BIN LIANG
CALCULATED-DESIGNED BY: JENNIFER ABRAMS
CHECKED BY: CHRIS SEWELL
REVISED BY: J.ABRAMS J.ABRAMS
DATE REVISED: 06/09/10 02/11/11

LAST REVISION 06-09-10 | DATE PLOTTED => 23-FEB-2011 | TIME PLOTTED => 12:59

Dist	COUNTY	ROUTE	POST MILES TOTAL PROJECT	SHEET No.	TOTAL SHEETS
04	SCI	17	0.0/2.8	161	278

REGISTERED CIVIL ENGINEER 3-26-10 DATE

9-7-10
PLANS APPROVAL DATE

REGISTERED PROFESSIONAL ENGINEER James Chuang No. 74690 Exp. 12-31-11 CIVIL STATE OF CALIFORNIA

THE STATE OF CALIFORNIA OR ITS OFFICERS OR AGENTS SHALL NOT BE RESPONSIBLE FOR THE ACCURACY OR COMPLETENESS OF SCANNED COPIES OF THIS PLAN SHEET.

FOR ACCURATE RIGHT OF WAY AND ACCESS DATA, CONTACT RIGHT OF WAY ENGINEERING AT THE DISTRICT OFFICE.

NOTES:

1. FOR EXACT LOCATIONS TO REMOVE Exist Conc BARRIER RAMP OR ACCESS CLOSURE, SEE DETOUR PLANS.
2. SEE STANDARD SPECIFICATION FOR LANE CLOSURE CHARTS AND TRANSITION REQUIREMENTS.
3. FOR CONSTRUCTION ACTIVITIES WHICH REQUIRE RAMP OR ACCESS CLOSURE, SEE DETOUR PLANS.

2

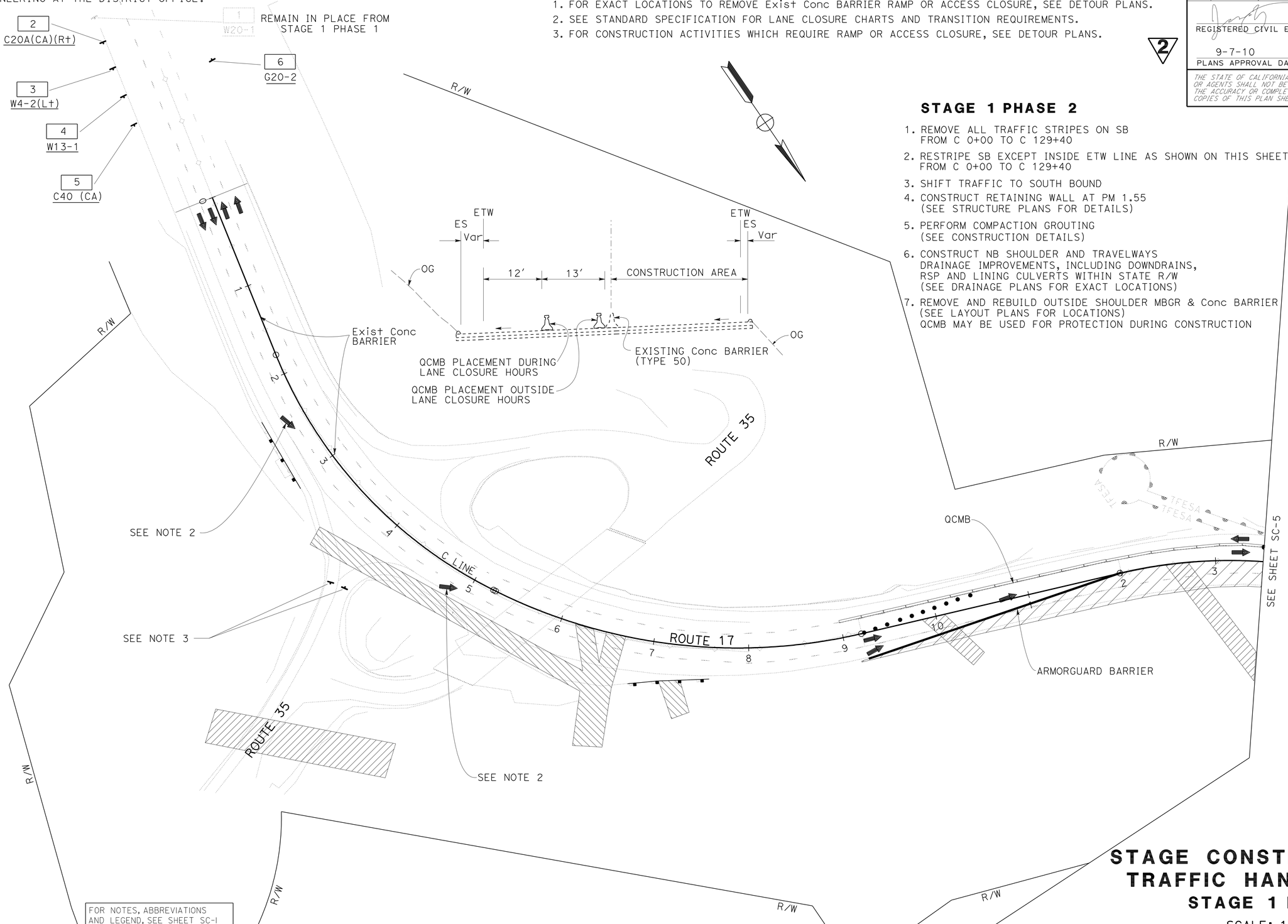

STAGE 1 PHASE 2

1. REMOVE ALL TRAFFIC STRIPES ON SB FROM C 0+00 TO C 129+40
2. RESTRIPE SB EXCEPT INSIDE ETW LINE AS SHOWN ON THIS SHEET FROM C 0+00 TO C 129+40
3. SHIFT TRAFFIC TO SOUTH BOUND
4. CONSTRUCT RETAINING WALL AT PM 1.55 (SEE STRUCTURE PLANS FOR DETAILS)
5. PERFORM COMPACTION GROUTING (SEE CONSTRUCTION DETAILS)
6. CONSTRUCT NB SHOULDER AND TRAVELWAYS DRAINAGE IMPROVEMENTS, INCLUDING DOWNDRAINS, RSP AND LINING CULVERTS WITHIN STATE R/W (SEE DRAINAGE PLANS FOR EXACT LOCATIONS)
7. REMOVE AND REBUILD OUTSIDE SHOULDER MBGR & Conc BARRIER (SEE LAYOUT PLANS FOR LOCATIONS) QCMB MAY BE USED FOR PROTECTION DURING CONSTRUCTION

FOR NOTES, ABBREVIATIONS AND LEGEND, SEE SHEET SC-1

THIS PLAN ACCURATE FOR STAGE CONSTRUCTION AND TRAFFIC HANDLING WORK ONLY

2 **REVISED PER ADDENDUM No. 2 DATED FEBRUARY 28, 2011**

STAGE CONSTRUCTION AND TRAFFIC HANDLING PLAN

STAGE 1 PHASE 2

SCALE: 1" = 50'

SC-4

REVISED BY	DATE REVISED
GIANG KHUU	3/15/10
JAMES CHUANG	3/15/10

CALCULATED-DESIGNED BY
CHECKED BY
FUNCTIONAL SUPERVISOR: SHAWN ENJILY

STATE OF CALIFORNIA - DEPARTMENT OF TRANSPORTATION
Caltrans
DESIGN

LAST REVISION 06-14-10
DATE PLOTTED => 23-FEB-2011
TIME PLOTTED => 11:12

Dist	COUNTY	ROUTE	POST MILES TOTAL PROJECT	SHEET No.	TOTAL SHEETS
04	SCI	17	0.0/2.8	173	278

REGISTERED CIVIL ENGINEER 3-26-10 DATE

9-7-10
PLANS APPROVAL DATE

REGISTERED PROFESSIONAL ENGINEER James Chuang No. 74690 Exp. 12-31-11 CIVIL STATE OF CALIFORNIA

THE STATE OF CALIFORNIA OR ITS OFFICERS OR AGENTS SHALL NOT BE RESPONSIBLE FOR THE ACCURACY OR COMPLETENESS OF SCANNED COPIES OF THIS PLAN SHEET.

FOR ACCURATE RIGHT OF WAY AND ACCESS DATA, CONTACT RIGHT OF WAY ENGINEERING AT THE DISTRICT OFFICE.

NOTES:

1. FOR EXACT LOCATIONS TO REMOVE Exist Conc BARRIER RAMP OR ACCESS CLOSURE, SEE DETOUR PLANS.
2. SEE STANDARD SPECIFICATION FOR LANE CLOSURE CHARTS AND TRANSITION REQUIREMENTS.
3. FOR CONSTRUCTION ACTIVITIES WHICH REQUIRE RAMP OR ACCESS CLOSURE, SEE DETOUR PLANS.

STAGE 2

1. REMOVE ALL TRAFFIC STRIPES ON SB FROM C 0+00 TO C 129+40
2. RESTRIPE NB EXCEPT INSIDE ETW LINE AS SHOWN ON THIS SHEET FROM C 0+00 TO C 129+40
3. SHIFT TRAFFIC TO NORTH BOUND
4. PERFORM COMPACTION GROUTING (SEE CONSTRUCTION DETAILS)
5. CONSTRUCT SB SHOULDER AND TRAVELWAYS DRAINAGE IMPROVEMENTS, INCLUDING DOWNDRAINS, RSP AND LINING CULVERTS WITHIN STATE R/W (SEE DRAINAGE PLANS FOR EXACT LOCATIONS)
6. REMOVE AND REBUILD OUTSIDE SHOULDER MBGR (SEE LAYOUT PLANS FOR LOCATIONS)

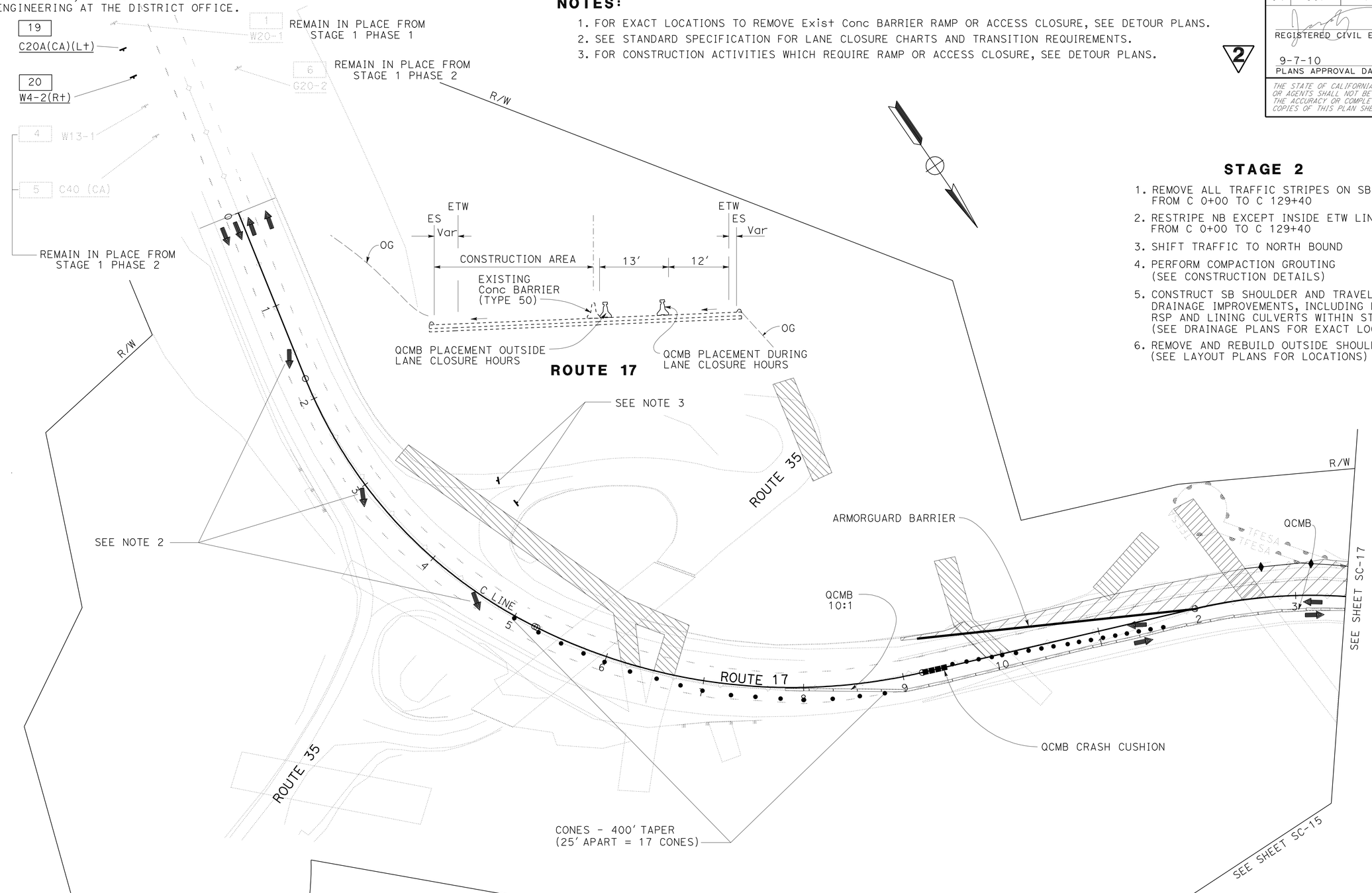

STAGE CONSTRUCTION AND TRAFFIC HANDLING PLAN
STAGE 2

SCALE: 1" = 50'

2 REVISED PER ADDENDUM No. 2 DATED FEBRUARY 28, 2011

FOR NOTES, ABBREVIATIONS AND LEGEND, SEE SHEET SC-I

THIS PLAN ACCURATE FOR STAGE CONSTRUCTION AND TRAFFIC HANDLING WORK ONLY

SC-16

STATE OF CALIFORNIA - DEPARTMENT OF TRANSPORTATION
Caltrans DESIGN

FUNCTIONAL SUPERVISOR: SHAWN ENJILY
CALCULATED-DESIGNED BY: GIANG KHUU
CHECKED BY: JAMES CHUANG
REVISED BY: 3/15/10
DATE REVISED: 3/15/10

LAST REVISION 03-29-10
DATE PLOTTED => 24-FEB-2011
TIME PLOTTED => 15:37

Dist	COUNTY	ROUTE	POST MILES TOTAL PROJECT	SHEET No.	TOTAL SHEETS
04	SCI	17	0.0/2.8	185	278

REGISTERED CIVIL ENGINEER 3-26-10 DATE

9-7-10
PLANS APPROVAL DATE

REGISTERED PROFESSIONAL ENGINEER James Chuang No. 74690 Exp. 12-31-11 CIVIL STATE OF CALIFORNIA

THE STATE OF CALIFORNIA OR ITS OFFICERS OR AGENTS SHALL NOT BE RESPONSIBLE FOR THE ACCURACY OR COMPLETENESS OF SCANNED COPIES OF THIS PLAN SHEET.

2

NOTE:

FOR ACCURATE RIGHT OF WAY AND ACCESS DATA,
CONTACT RIGHT OF WAY ENGINEERING AT THE DISTRICT OFFICE.

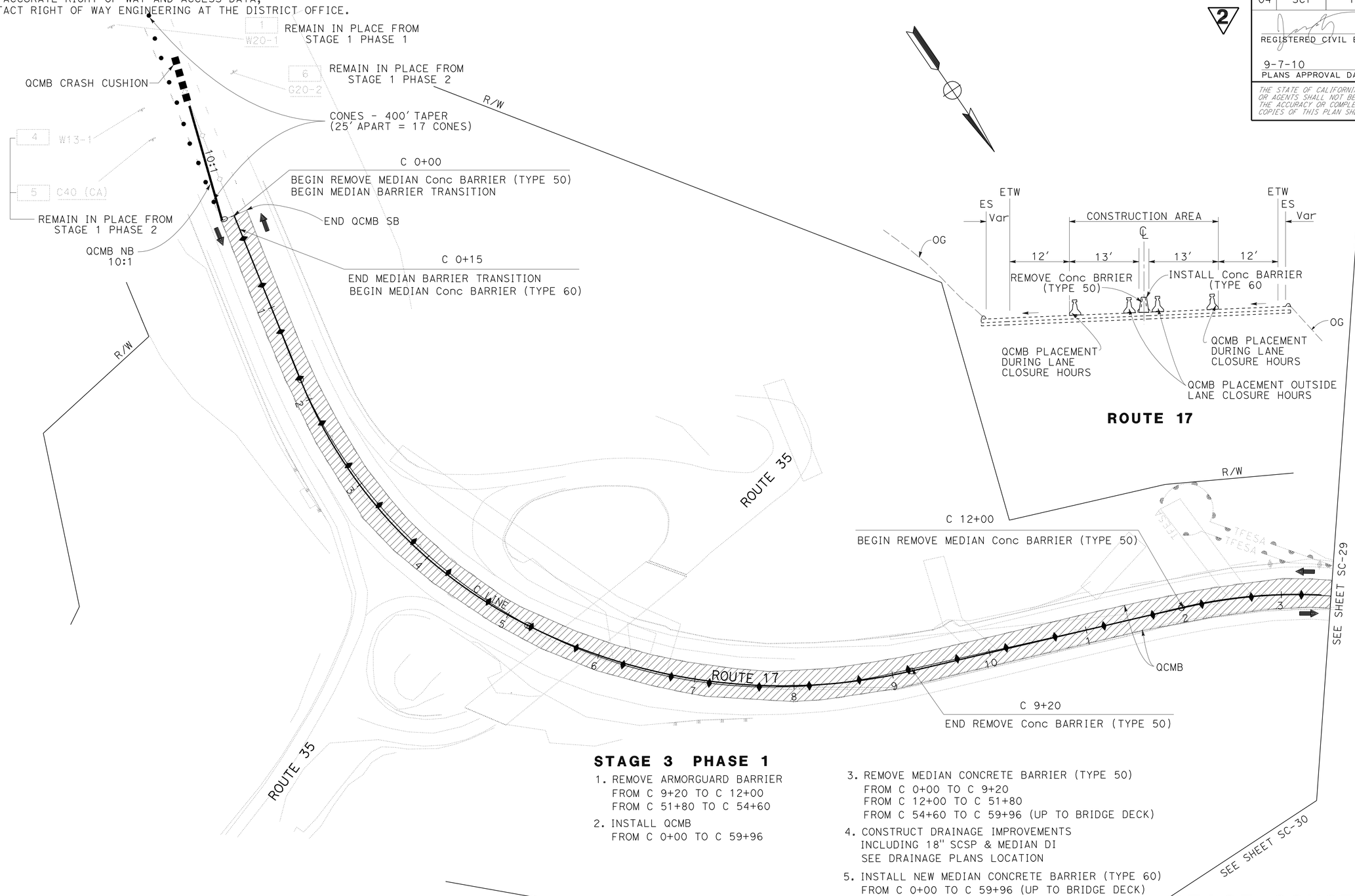

STAGE 3 PHASE 1

1. REMOVE ARMORGUARD BARRIER
   FROM C 9+20 TO C 12+00
   FROM C 51+80 TO C 54+60
2. INSTALL QCMB
   FROM C 0+00 TO C 59+96
3. REMOVE MEDIAN CONCRETE BARRIER (TYPE 50)
   FROM C 0+00 TO C 9+20
   FROM C 12+00 TO C 51+80
   FROM C 54+60 TO C 59+96 (UP TO BRIDGE DECK)
4. CONSTRUCT DRAINAGE IMPROVEMENTS
   INCLUDING 18" SCSP & MEDIAN DI
   SEE DRAINAGE PLANS LOCATION
5. INSTALL NEW MEDIAN CONCRETE BARRIER (TYPE 60)
   FROM C 0+00 TO C 59+96 (UP TO BRIDGE DECK)
6. POINT POST MILE ON MEDIAN Conc BARRIER
   (SEE CONSTRUCTION DETAIL C-4)

STAGE CONSTRUCTION AND TRAFFIC HANDLING PLAN

STAGE 3 PHASE 1

SCALE: 1" = 50'

2 **REVISED PER ADDENDUM No. 2 DATED FEBRUARY 28, 2011**

FOR NOTES, ABBREVIATIONS AND LEGEND, SEE SHEET SC-2

THIS PLAN ACCURATE FOR STAGE CONSTRUCTION AND TRAFFIC HANDLING WORK ONLY

SC-28

REVISED BY	DATE REVISED
GIANG KHUU	3/15/10
JAMES CHUANG	3/15/10

CALCULATED-DESIGNED BY
CHECKED BY
FUNCTIONAL SUPERVISOR: SHAWN ENJILY

STATE OF CALIFORNIA - DEPARTMENT OF TRANSPORTATION
Caltrans
DESIGN

LAST REVISION 03-23-10
DATE PLOTTED => 23-FEB-2011
TIME PLOTTED => 11:26

Dist	COUNTY	ROUTE	POST MILES TOTAL PROJECT	SHEET No.	TOTAL SHEETS
04	SCI	17	0.0/2.8	189	278

REGISTERED CIVIL ENGINEER 3-26-10 DATE

9-7-10
PLANS APPROVAL DATE

REGISTERED PROFESSIONAL ENGINEER James Chuang No. 74690 Exp. 12-31-11 CIVIL STATE OF CALIFORNIA

THE STATE OF CALIFORNIA OR ITS OFFICERS OR AGENTS SHALL NOT BE RESPONSIBLE FOR THE ACCURACY OR COMPLETENESS OF SCANNED COPIES OF THIS PLAN SHEET.

NOTE:

FOR ACCURATE RIGHT OF WAY AND ACCESS DATA,
CONTACT RIGHT OF WAY ENGINEERING AT THE DISTRICT OFFICE.

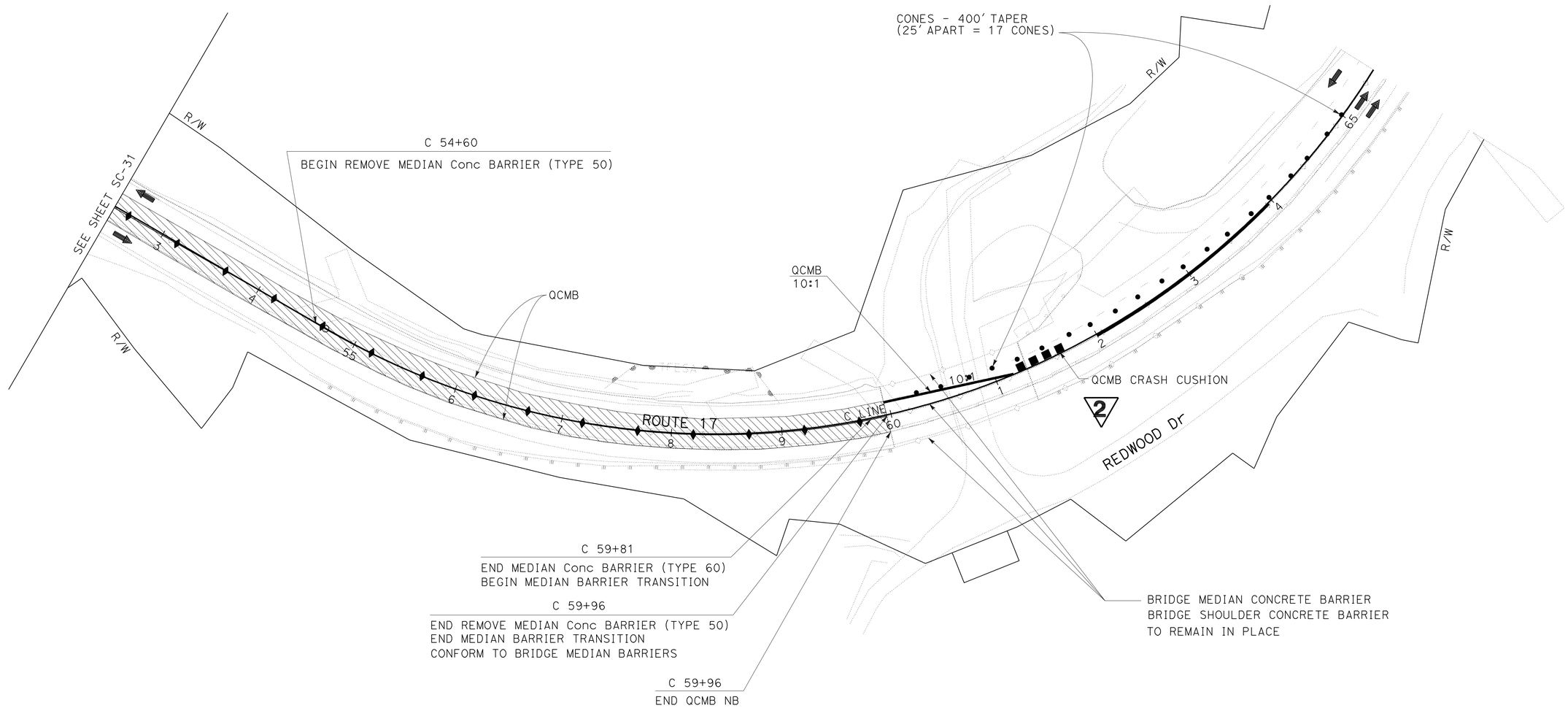

2 **REVISED PER ADDENDUM No. 2 DATED FEBRUARY 28, 2011**

STAGE CONSTRUCTION AND TRAFFIC HANDLING PLAN

STAGE 3 PHASE 1

SCALE: 1" = 50'

FOR NOTES, ABBREVIATIONS AND LEGEND, SEE SHEET SC-33

THIS PLAN ACCURATE FOR STAGE CONSTRUCTION AND TRAFFIC HANDLING WORK ONLY

SC-32

REVISED BY	GIANG KHUU
DATE REVISED	3/15/10
CALCULATED-DESIGNED BY	JAMES CHUANG
CHECKED BY	3/15/10
FUNCTIONAL SUPERVISOR	SHAWN ENJILY

STATE OF CALIFORNIA - DEPARTMENT OF TRANSPORTATION
Caltrans
DESIGN

LAST REVISION 03-23-10 | DATE PLOTTED => 23-FEB-2011 | TIME PLOTTED => 10:27

Dist	COUNTY	ROUTE	POST MILES TOTAL PROJECT	SHEET No.	TOTAL SHEETS
04	SCI	17	0.0/2.8	190	278

REGISTERED CIVIL ENGINEER 3-26-10 DATE

9-7-10
PLANS APPROVAL DATE

REGISTERED PROFESSIONAL ENGINEER James Chuang No. 74690 Exp. 12-31-11 CIVIL STATE OF CALIFORNIA

THE STATE OF CALIFORNIA OR ITS OFFICERS OR AGENTS SHALL NOT BE RESPONSIBLE FOR THE ACCURACY OR COMPLETENESS OF SCANNED COPIES OF THIS PLAN SHEET.

2

NOTE:

FOR ACCURATE RIGHT OF WAY AND ACCESS DATA,
CONTACT RIGHT OF WAY ENGINEERING AT THE DISTRICT OFFICE.

STAGE 3 PHASE 2

1. REMOVE ARMORGUARD BARRIER
   FROM C 106+00 TO C 107+96
2. INSTALL QCMB
   FROM C 61+30 TO C 129+40
3. REMOVE MEDIAN CONCRETE BARRIER (TYPE 50)
   FROM C 61+50 TO C 106+00
   FROM C 107+96 TO C 129+09
4. REMOVE EXISTING CRASH CUSHION AT C 129+09
5. CONSTRUCT DRAINAGE IMPROVEMENTS
   INCLUDING 18" SCSP & MEDIAN DI
   SEE DRAINAGE PLANS LOCATION
6. INSTALL NEW MEDIAN CONCRETE BARRIER (TYPE 60)
   FROM C 61+30 TO C 129+09
7. INSTALL CRASH CUSHION (TYPE CAT) AT C 129+09

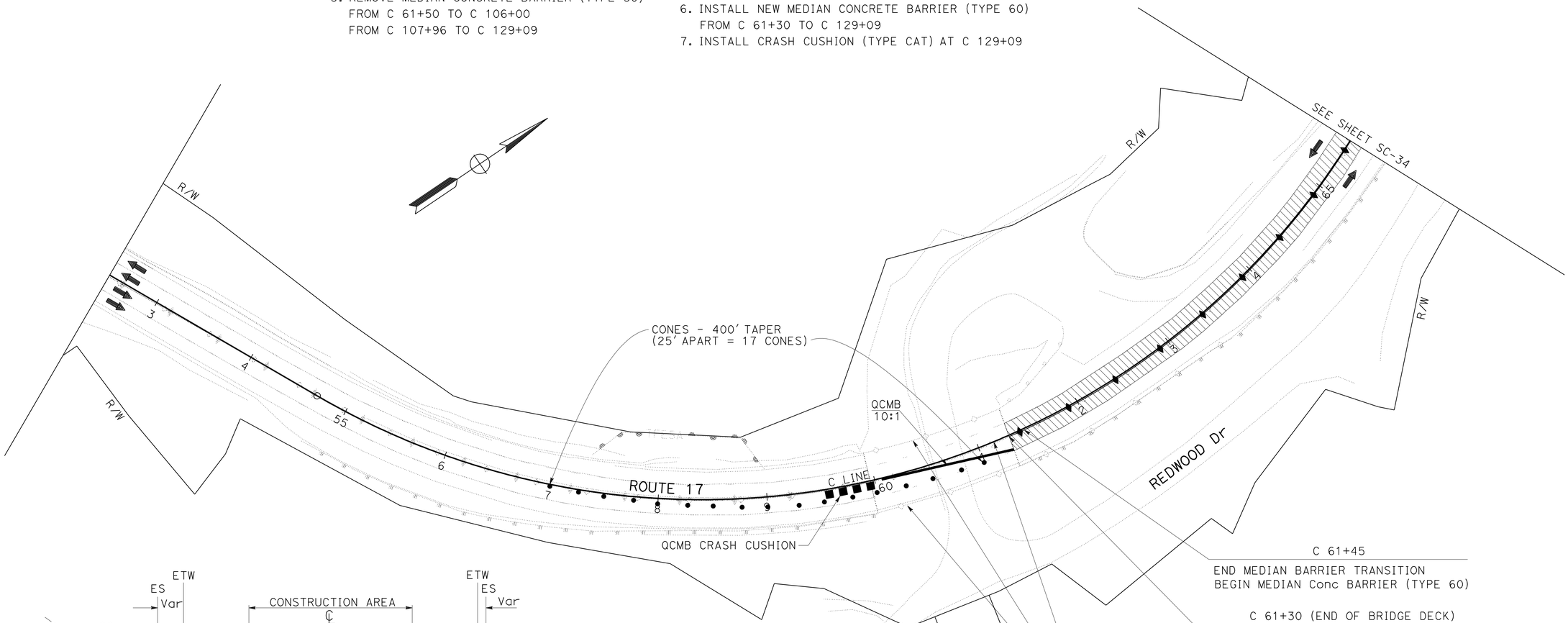

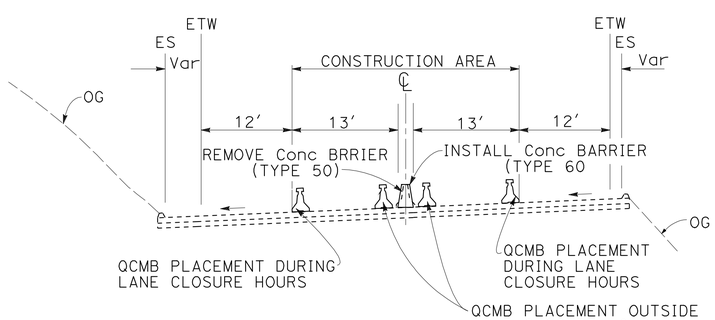

ROUTE 17

STAGE CONSTRUCTION AND TRAFFIC HANDLING PLAN

STAGE 3 PHASE 2

SCALE: 1" = 50'

2 **REVISED PER ADDENDUM No. 2 DATED FEBRUARY 28, 2011**

FOR NOTES, ABBREVIATIONS AND LEGEND, SEE SHEET SC-33

THIS PLAN ACCURATE FOR STAGE CONSTRUCTION AND TRAFFIC HANDLING WORK ONLY

SC-33

STATE OF CALIFORNIA - DEPARTMENT OF TRANSPORTATION
Caltrans
DESIGN

FUNCTIONAL SUPERVISOR: SHAWN ENJILY
CALCULATED-DESIGNED BY: GIANG KHUU
CHECKED BY: JAMES CHUANG
REVISED BY: 3/15/10
DATE REVISED: 3/15/10

LAST REVISION 03-24-10
DATE PLOTTED => 23-FEB-2011
TIME PLOTTED => 11:22

Dist	COUNTY	ROUTE	POST MILES TOTAL PROJECT	SHEET No.	TOTAL SHEETS
04	SCI	17	0.0/2.8	196	278

REGISTERED CIVIL ENGINEER 3-26-10 DATE

9-7-10
PLANS APPROVAL DATE

REGISTERED PROFESSIONAL ENGINEER James Chuang No. 74690 Exp. 12-31-11 CIVIL STATE OF CALIFORNIA

THE STATE OF CALIFORNIA OR ITS OFFICERS OR AGENTS SHALL NOT BE RESPONSIBLE FOR THE ACCURACY OR COMPLETENESS OF SCANNED COPIES OF THIS PLAN SHEET.

NOTE:

FOR ACCURATE RIGHT OF WAY AND ACCESS DATA,
CONTACT RIGHT OF WAY ENGINEERING AT THE DISTRICT OFFICE.

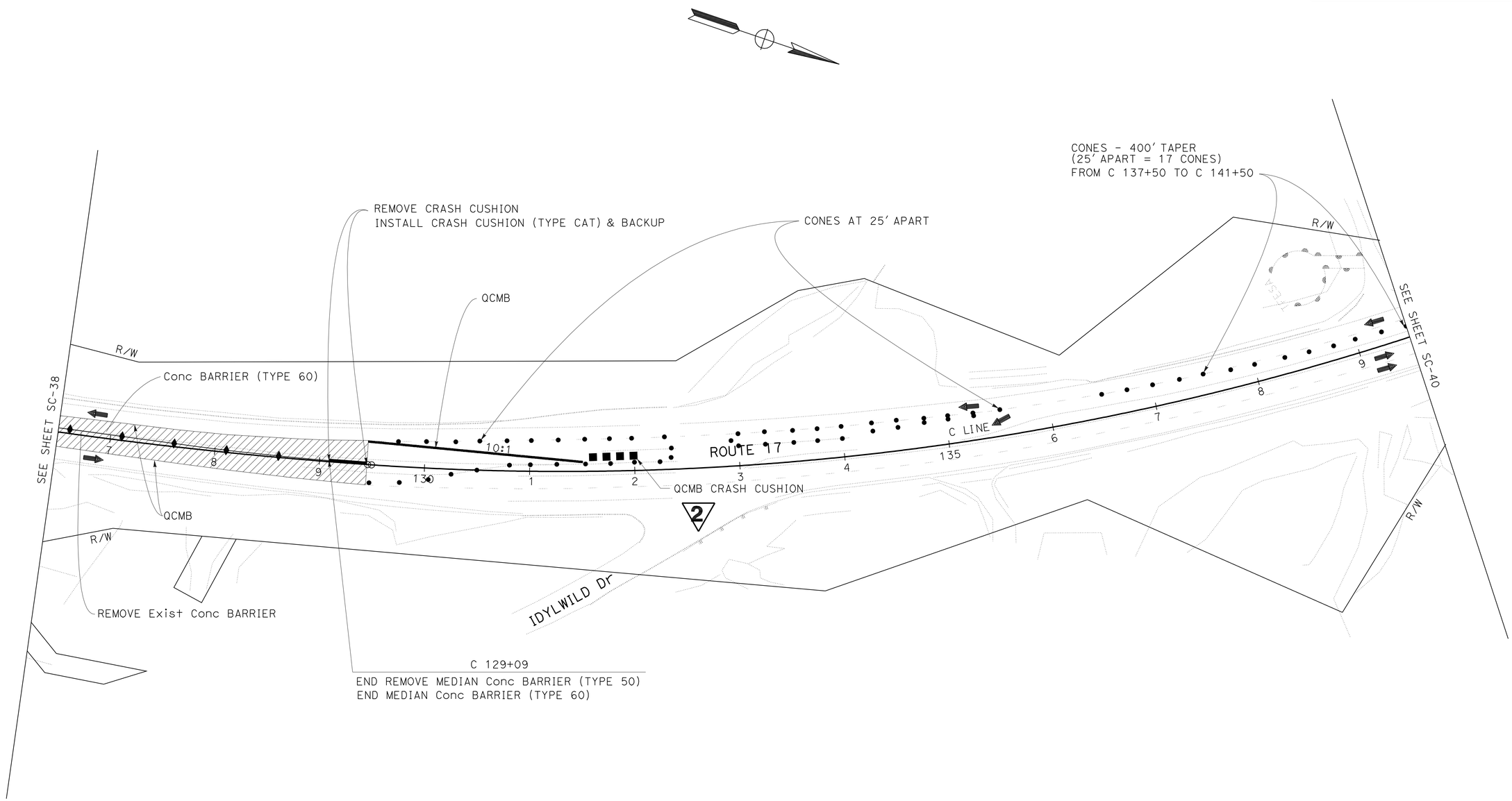

2 **REVISED PER ADDENDUM No. 2 DATED FEBRUARY 28, 2011**

STAGE CONSTRUCTION AND TRAFFIC HANDLING PLAN

STAGE 3 PHASE 2

SCALE: 1" = 50'

FOR NOTES, ABBREVIATIONS AND LEGEND, SEE SHEET SC-1

THIS PLAN ACCURATE FOR STAGE CONSTRUCTION AND TRAFFIC HANDLING WORK ONLY

SC-39

STATE OF CALIFORNIA - DEPARTMENT OF TRANSPORTATION
Caltrans® DESIGN
FUNCTIONAL SUPERVISOR: SHAWN ENJILY
CALCULATED-DESIGNED BY: GIANG KHUU
CHECKED BY: JAMES CHUANG
REVISED BY: 3/15/10
DATE REVISED: 3/15/10

LAST REVISION 03-24-10 | DATE PLOTTED => 23-FEB-2011 | TIME PLOTTED => 10:27

Dist	COUNTY	ROUTE	POST MILES TOTAL PROJECT	SHEET No.	TOTAL SHEETS
04	SCI	17	0.0/2.8	198	278

REGISTERED CIVIL ENGINEER 3-26-10 DATE

9-7-10
PLANS APPROVAL DATE

REGISTERED PROFESSIONAL ENGINEER James Chuang No. 74690 Exp. 12-31-11 CIVIL STATE OF CALIFORNIA

THE STATE OF CALIFORNIA OR ITS OFFICERS OR AGENTS SHALL NOT BE RESPONSIBLE FOR THE ACCURACY OR COMPLETENESS OF SCANNED COPIES OF THIS PLAN SHEET.

NOTE:

FOR ACCURATE RIGHT OF WAY AND ACCESS DATA, CONTACT RIGHT OF WAY ENGINEERING AT THE DISTRICT OFFICE.

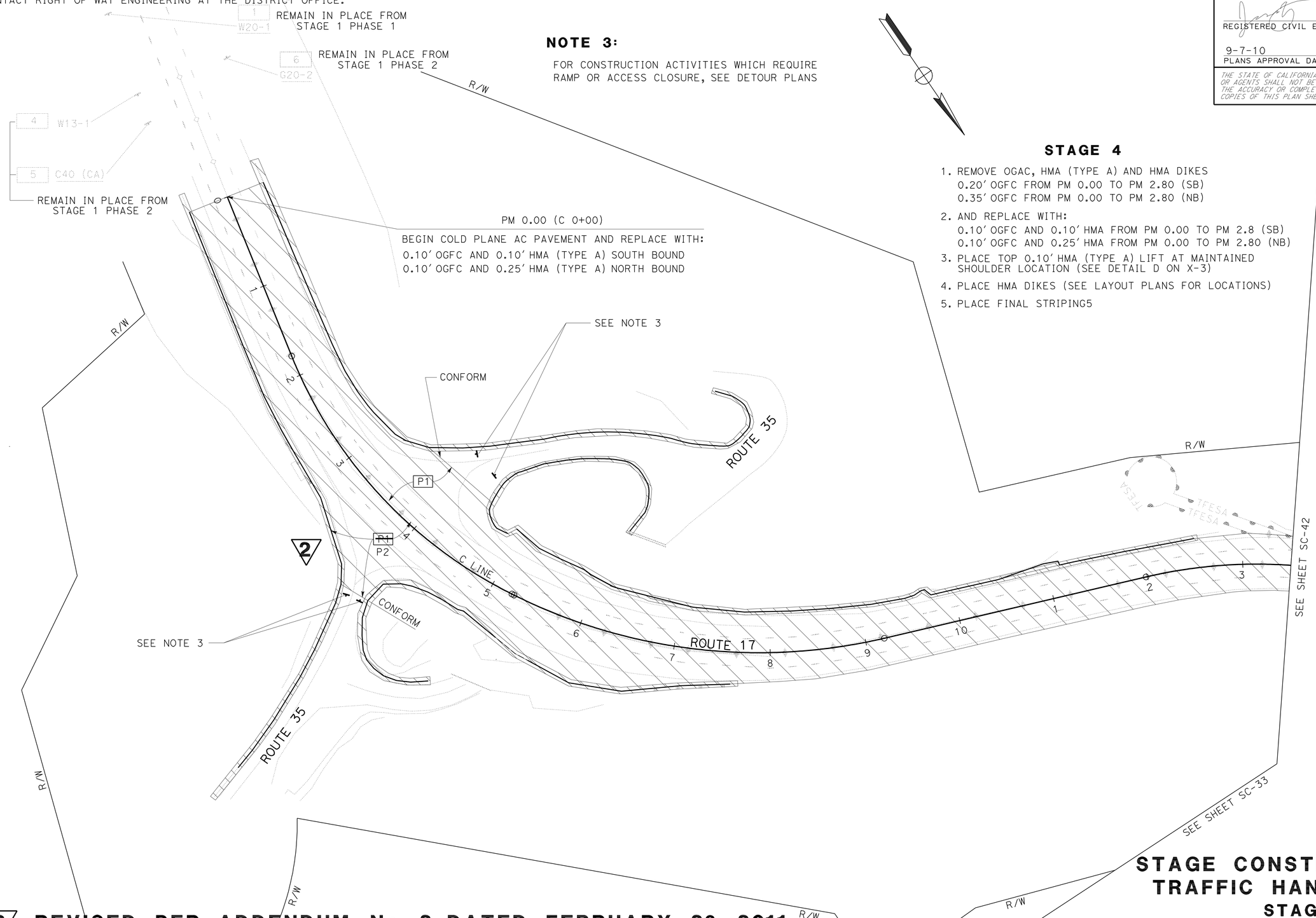

NOTE 3:

FOR CONSTRUCTION ACTIVITIES WHICH REQUIRE RAMP OR ACCESS CLOSURE, SEE DETOUR PLANS

STAGE 4

1. REMOVE OGAC, HMA (TYPE A) AND HMA DIKES
   0.20' OGFC FROM PM 0.00 TO PM 2.80 (SB)
   0.35' OGFC FROM PM 0.00 TO PM 2.80 (NB)
2. AND REPLACE WITH:
   0.10' OGFC AND 0.10' HMA FROM PM 0.00 TO PM 2.8 (SB)
   0.10' OGFC AND 0.25' HMA FROM PM 0.00 TO PM 2.80 (NB)
3. PLACE TOP 0.10' HMA (TYPE A) LIFT AT MAINTAINED SHOULDER LOCATION (SEE DETAIL D ON X-3)
4. PLACE HMA DIKES (SEE LAYOUT PLANS FOR LOCATIONS)
5. PLACE FINAL STRIPING5

2 **REVISED PER ADDENDUM No. 2 DATED FEBRUARY 28, 2011**

FOR NOTES, ABBREVIATIONS AND LEGEND, SEE SHEET SC-1

THIS PLAN ACCURATE FOR STAGE CONSTRUCTION AND TRAFFIC HANDLING WORK ONLY

STAGE CONSTRUCTION AND TRAFFIC HANDLING PLAN

STAGE 4

SCALE: 1'' = 50'

SC-41

REVISED BY	DATE REVISED	CALCULATED-DESIGNED BY	CHECKED BY	FUNCTIONAL SUPERVISOR
GIANG KHUU	3/15/10	JAMES CHUANG		SHAWN ENJILY

STATE OF CALIFORNIA - DEPARTMENT OF TRANSPORTATION
Caltrans® DESIGN

LAST REVISION 03-29-10 | DATE PLOTTED => 23-FEB-2011 | TIME PLOTTED => 10:28

Dist	COUNTY	ROUTE	POST MILES TOTAL PROJECT	SHEET No.	TOTAL SHEETS
04	SCI	17	0.0/2.8	199	278

REGISTERED CIVIL ENGINEER 3-26-10 DATE

9-7-10
PLANS APPROVAL DATE

REGISTERED PROFESSIONAL ENGINEER James Chuang No. 74690 Exp. 12-31-11 CIVIL STATE OF CALIFORNIA

THE STATE OF CALIFORNIA OR ITS OFFICERS OR AGENTS SHALL NOT BE RESPONSIBLE FOR THE ACCURACY OR COMPLETENESS OF SCANNED COPIES OF THIS PLAN SHEET.

NOTE:

FOR ACCURATE RIGHT OF WAY AND ACCESS DATA,
CONTACT RIGHT OF WAY ENGINEERING AT THE DISTRICT OFFICE.

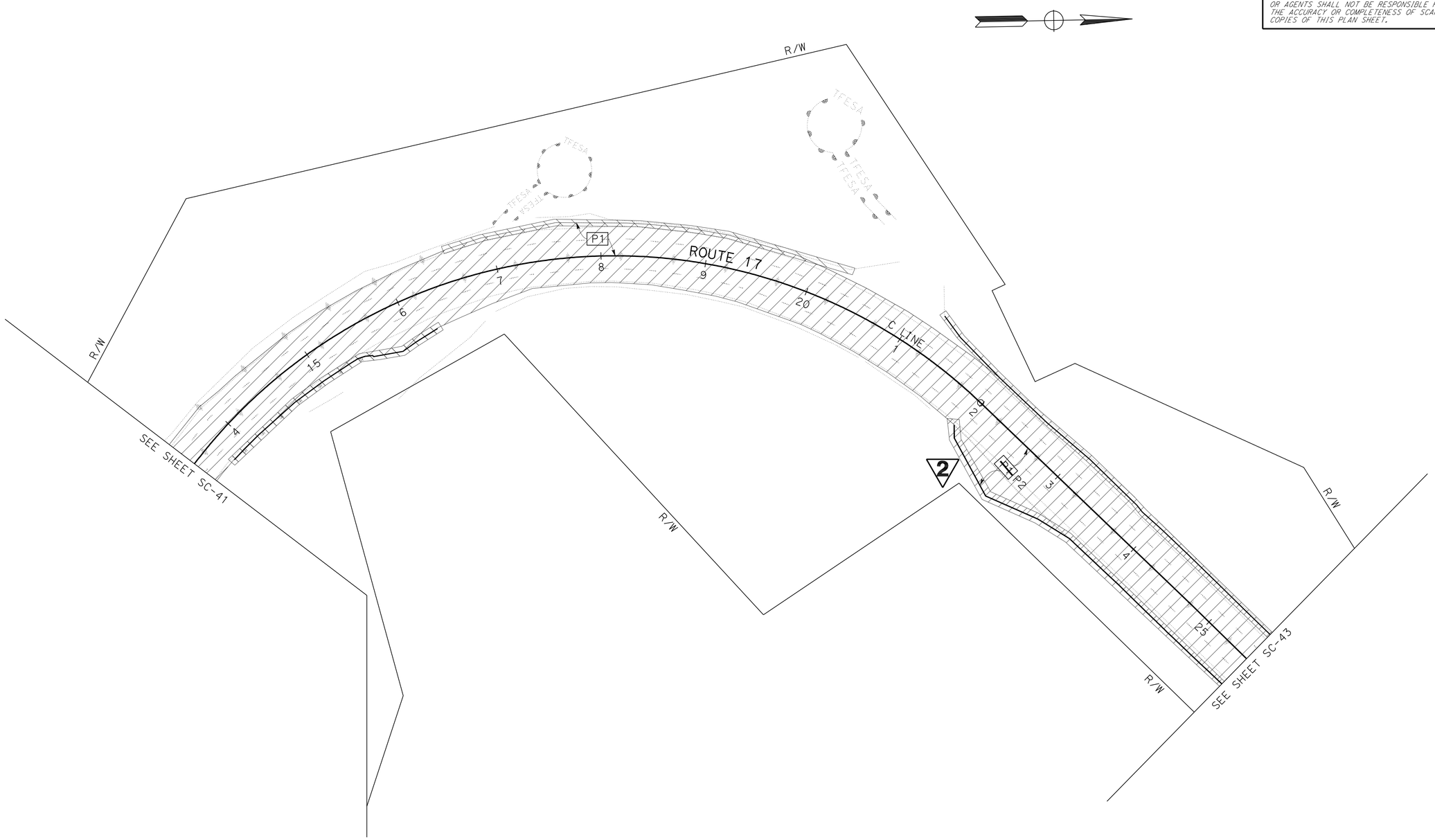

2 **REVISED PER ADDENDUM No. 2 DATED FEBRUARY 28, 2011**

STAGE CONSTRUCTION AND TRAFFIC HANDLING PLAN

STAGE 4

SCALE: 1'' = 50'

FOR NOTES, ABBREVIATIONS AND LEGEND, SEE SHEET SC-1

THIS PLAN ACCURATE FOR STAGE CONSTRUCTION AND TRAFFIC HANDLING WORK ONLY

SC-42

REVISED BY	GIANG KHUU
DATE REVISED	3/15/10
CALCULATED-DESIGNED BY	JAMES CHUANG
CHECKED BY	3/15/10
FUNCTIONAL SUPERVISOR	SHAWN ENJILY

STATE OF CALIFORNIA - DEPARTMENT OF TRANSPORTATION
Caltrans
DESIGN

LAST REVISION 03-24-09 | DATE PLOTTED => 23-FEB-2011 | TIME PLOTTED => 10:32

Dist	COUNTY	ROUTE	POST MILES TOTAL PROJECT	SHEET No.	TOTAL SHEETS
04	SCI	17	0.0/2.8	200	278

REGISTERED CIVIL ENGINEER 3-26-10 DATE

9-7-10
PLANS APPROVAL DATE

REGISTERED PROFESSIONAL ENGINEER James Chuang No. 74690 Exp. 12-31-11 CIVIL STATE OF CALIFORNIA

THE STATE OF CALIFORNIA OR ITS OFFICERS OR AGENTS SHALL NOT BE RESPONSIBLE FOR THE ACCURACY OR COMPLETENESS OF SCANNED COPIES OF THIS PLAN SHEET.

NOTE:

FOR ACCURATE RIGHT OF WAY AND ACCESS DATA,
CONTACT RIGHT OF WAY ENGINEERING AT THE DISTRICT OFFICE.

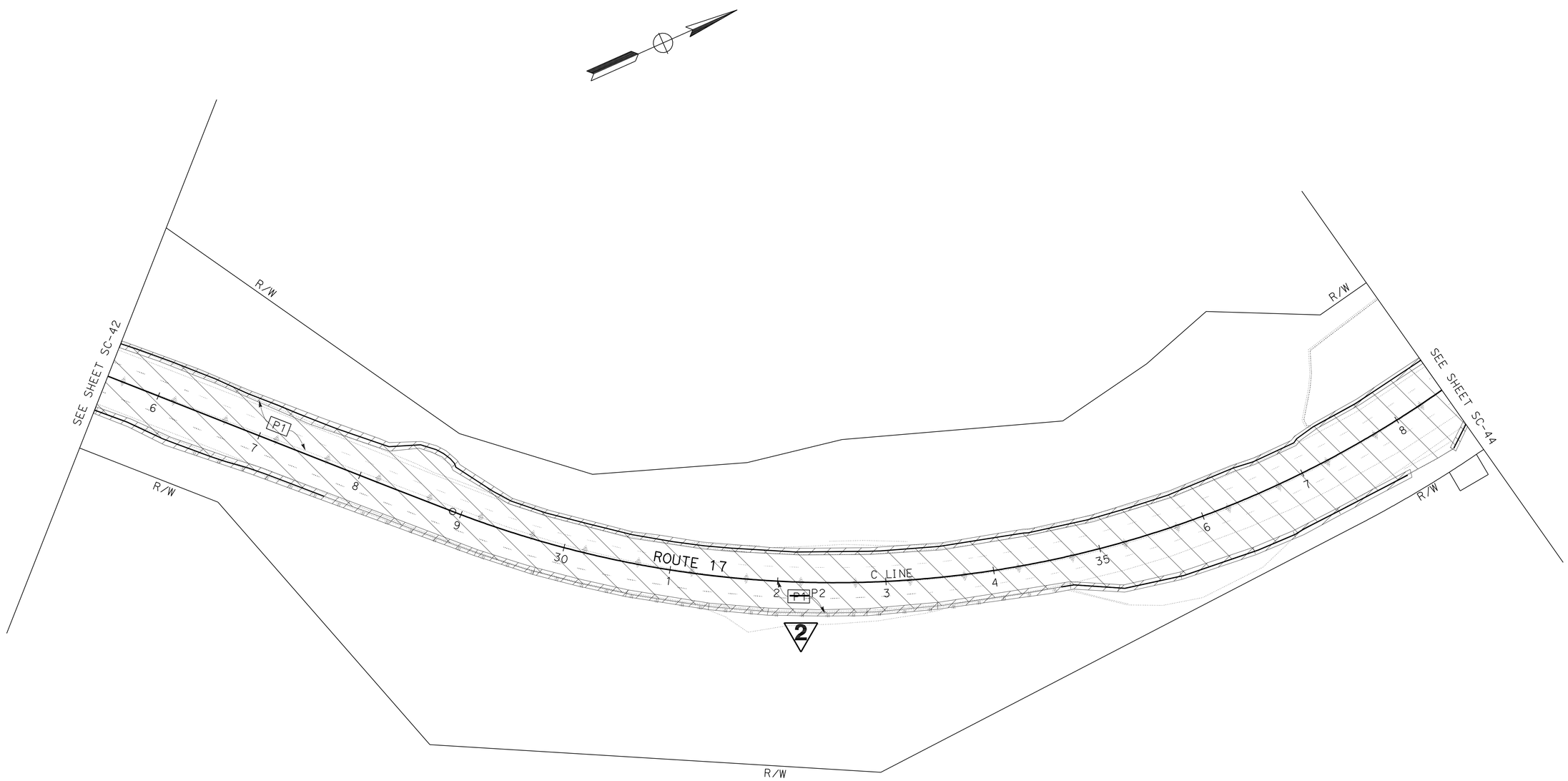

2 REVISED PER ADDENDUM No. 2 DATED FEBRUARY 28, 2011

STAGE CONSTRUCTION AND TRAFFIC HANDLING PLAN

STAGE 4

SCALE: 1'' = 50'

FOR NOTES, ABBREVIATIONS AND LEGEND, SEE SHEET SC-1

THIS PLAN ACCURATE FOR STAGE CONSTRUCTION AND TRAFFIC HANDLING WORK ONLY

SC-43

REVISED BY	3/15/10
DATE REVISED	3/15/10
CALCULATED-DESIGNED BY	GIANG KHUU
CHECKED BY	JAMES CHUANG
FUNCTIONAL SUPERVISOR	SHAWN ENJILY

STATE OF CALIFORNIA - DEPARTMENT OF TRANSPORTATION
Caltrans
DESIGN

LAST REVISION 03-24-09 | DATE PLOTTED => 23-FEB-2011 | TIME PLOTTED => 10:32

Dist	COUNTY	ROUTE	POST MILES TOTAL PROJECT	SHEET No.	TOTAL SHEETS
04	SCI	17	0.0/2.8	201	278

REGISTERED CIVIL ENGINEER 3-26-10 DATE

9-7-10
PLANS APPROVAL DATE

REGISTERED PROFESSIONAL ENGINEER James Chuang No. 74690 Exp. 12-31-11 CIVIL STATE OF CALIFORNIA

THE STATE OF CALIFORNIA OR ITS OFFICERS OR AGENTS SHALL NOT BE RESPONSIBLE FOR THE ACCURACY OR COMPLETENESS OF SCANNED COPIES OF THIS PLAN SHEET.

FOR ACCURATE RIGHT OF WAY AND ACCESS DATA, CONTACT RIGHT OF WAY ENGINEERING AT THE DISTRICT OFFICE.

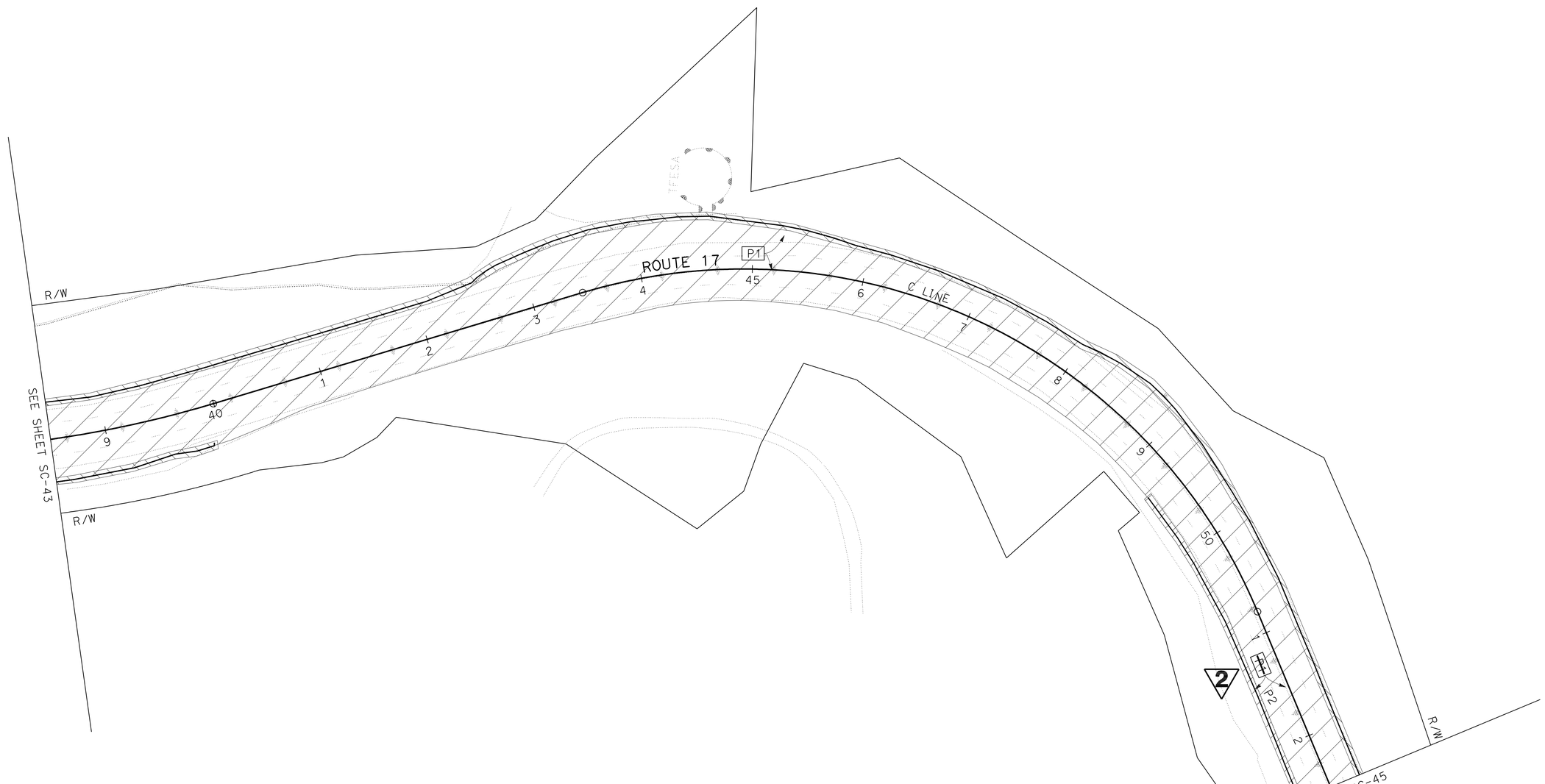

STAGE CONSTRUCTION AND TRAFFIC HANDLING PLAN

STAGE 4

SCALE: 1" = 50'

2 REVISED PER ADDENDUM No. 2 DATED FEBRUARY 28, 2011

FOR NOTES, ABBREVIATIONS AND LEGEND, SEE SHEET SC-1

THIS PLAN ACCURATE FOR STAGE CONSTRUCTION AND TRAFFIC HANDLING WORK ONLY

SC-44

REVISED BY	DATE REVISED
GIANG KHUU	3/15/10
JAMES CHUANG	3/15/10

CALCULATED-DESIGNED BY
CHECKED BY

FUNCTIONAL SUPERVISOR
SHAWN ENJILY

STATE OF CALIFORNIA - DEPARTMENT OF TRANSPORTATION
Caltrans
DESIGN

LAST REVISION 03-24-10 | DATE PLOTTED => 23-FEB-2011 | TIME PLOTTED => 10:32

Dist	COUNTY	ROUTE	POST MILES TOTAL PROJECT	SHEET No.	TOTAL SHEETS
04	SCI	17	0.0/2.8	202	278

REGISTERED CIVIL ENGINEER 3-26-10 DATE

9-7-10
PLANS APPROVAL DATE

REGISTERED PROFESSIONAL ENGINEER James Chuang No. 74690 Exp. 12-31-11 CIVIL STATE OF CALIFORNIA

THE STATE OF CALIFORNIA OR ITS OFFICERS OR AGENTS SHALL NOT BE RESPONSIBLE FOR THE ACCURACY OR COMPLETENESS OF SCANNED COPIES OF THIS PLAN SHEET.

FOR ACCURATE RIGHT OF WAY AND ACCESS DATA, CONTACT RIGHT OF WAY ENGINEERING AT THE DISTRICT OFFICE.

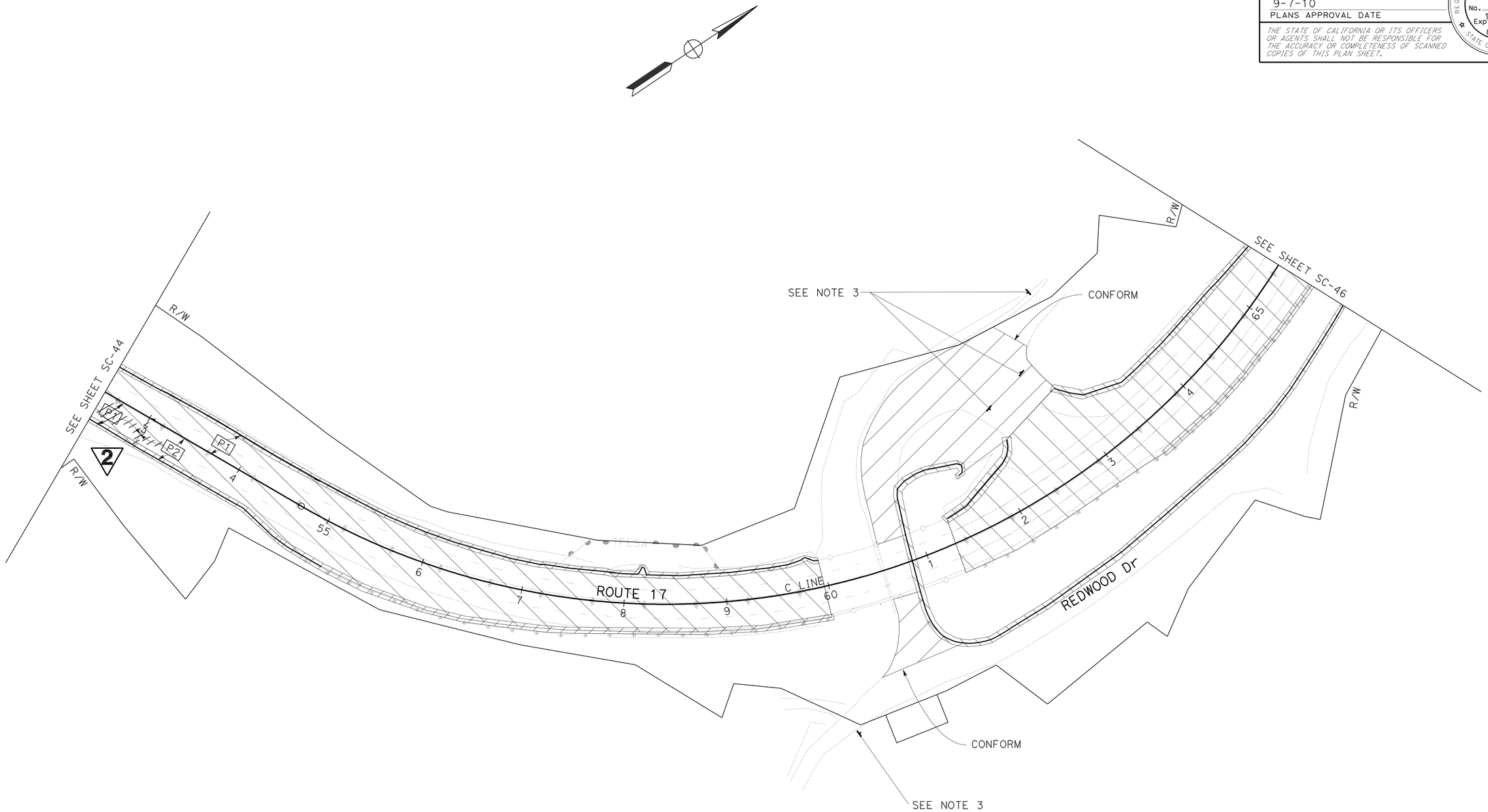

2 **REVISED PER ADDENDUM No. 2 DATED FEBRUARY 28, 2011**

STAGE CONSTRUCTION AND TRAFFIC HANDLING PLAN
STAGE 4

SCALE: 1" = 50'

FOR NOTES, ABBREVIATIONS AND LEGEND, SEE SHEET SC-1

THIS PLAN ACCURATE FOR STAGE CONSTRUCTION AND TRAFFIC HANDLING WORK ONLY

SC-45

STATE OF CALIFORNIA - DEPARTMENT OF TRANSPORTATION
Caltrans® DESIGN

FUNCTIONAL SUPERVISOR: SHAWN ENJILY
CALCULATED-DESIGNED BY: GIANG KHUU
CHECKED BY: JAMES CHUANG
REVISED BY: 3/15/10
DATE REVISED: 3/15/10

LAST REVISION 03-24-10
DATE PLOTTED => 23-FEB-2011
TIME PLOTTED => 10:32

BORDER LAST REVISED 4/11/2008
RELATIVE BORDER SCALE IS IN INCHES 0 1 2 3
USERNAME => trmariak
DGN FILE => 426490ma045.add
CU 04239
EA 264901

Dist	COUNTY	ROUTE	POST MILES TOTAL PROJECT	SHEET No.	TOTAL SHEETS
04	SCI	17	0.0/2.8	204	278

REGISTERED CIVIL ENGINEER 3-26-10 DATE

9-7-10
PLANS APPROVAL DATE

REGISTERED PROFESSIONAL ENGINEER James Chuang No. 74690 Exp. 12-31-11 CIVIL STATE OF CALIFORNIA

THE STATE OF CALIFORNIA OR ITS OFFICERS OR AGENTS SHALL NOT BE RESPONSIBLE FOR THE ACCURACY OR COMPLETENESS OF SCANNED COPIES OF THIS PLAN SHEET.

FOR ACCURATE RIGHT OF WAY AND ACCESS DATA, CONTACT RIGHT OF WAY ENGINEERING AT THE DISTRICT OFFICE.

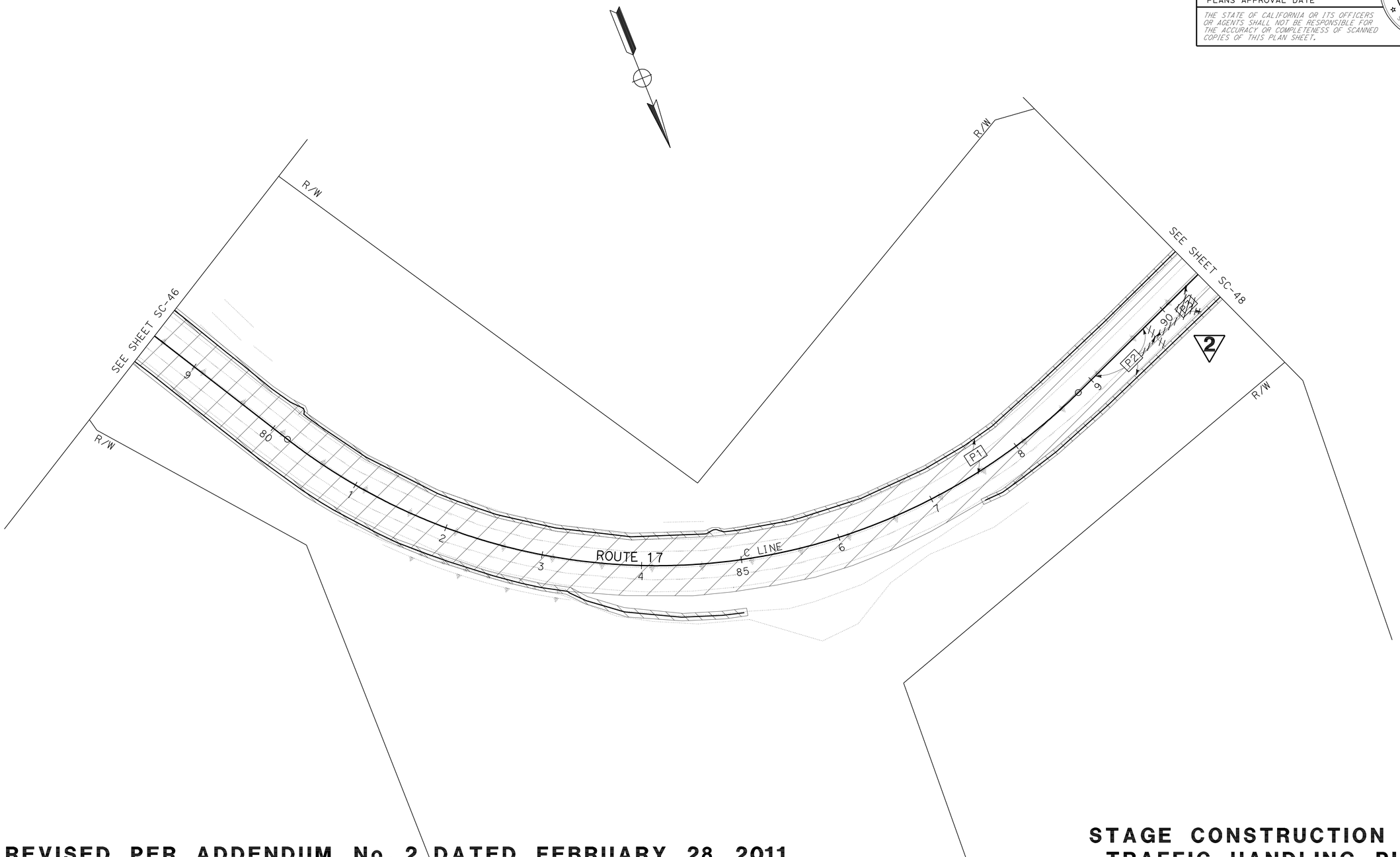

2 REVISED PER ADDENDUM No. 2 DATED FEBRUARY 28, 2011

STAGE CONSTRUCTION AND TRAFFIC HANDLING PLAN

STAGE 4

SCALE: 1" = 50'

FOR NOTES, ABBREVIATIONS AND LEGEND, SEE SHEET SC-1

THIS PLAN ACCURATE FOR STAGE CONSTRUCTION AND TRAFFIC HANDLING WORK ONLY

SC-47

STATE OF CALIFORNIA - DEPARTMENT OF TRANSPORTATION
Caltrans DESIGN

FUNCTIONAL SUPERVISOR: SHAWN ENJILY
CALCULATED-DESIGNED BY: GIANG KHUU
CHECKED BY: JAMES CHUANG
REVISED BY: 3/15/10
DATE REVISED: 3/15/10

LAST REVISION 03-24-10 | DATE PLOTTED => 23-FEB-2011 | TIME PLOTTED => 10:32

Dist	COUNTY	ROUTE	POST MILES TOTAL PROJECT	SHEET No.	TOTAL SHEETS
04	SCI	17	0.0/2.8	205	278

REGISTERED CIVIL ENGINEER 3-26-10 DATE

9-7-10
PLANS APPROVAL DATE

REGISTERED PROFESSIONAL ENGINEER James Chuang No. 74690 Exp. 12-31-11 CIVIL STATE OF CALIFORNIA

THE STATE OF CALIFORNIA OR ITS OFFICERS OR AGENTS SHALL NOT BE RESPONSIBLE FOR THE ACCURACY OR COMPLETENESS OF SCANNED COPIES OF THIS PLAN SHEET.

FOR ACCURATE RIGHT OF WAY AND ACCESS DATA, CONTACT RIGHT OF WAY ENGINEERING AT THE DISTRICT OFFICE.

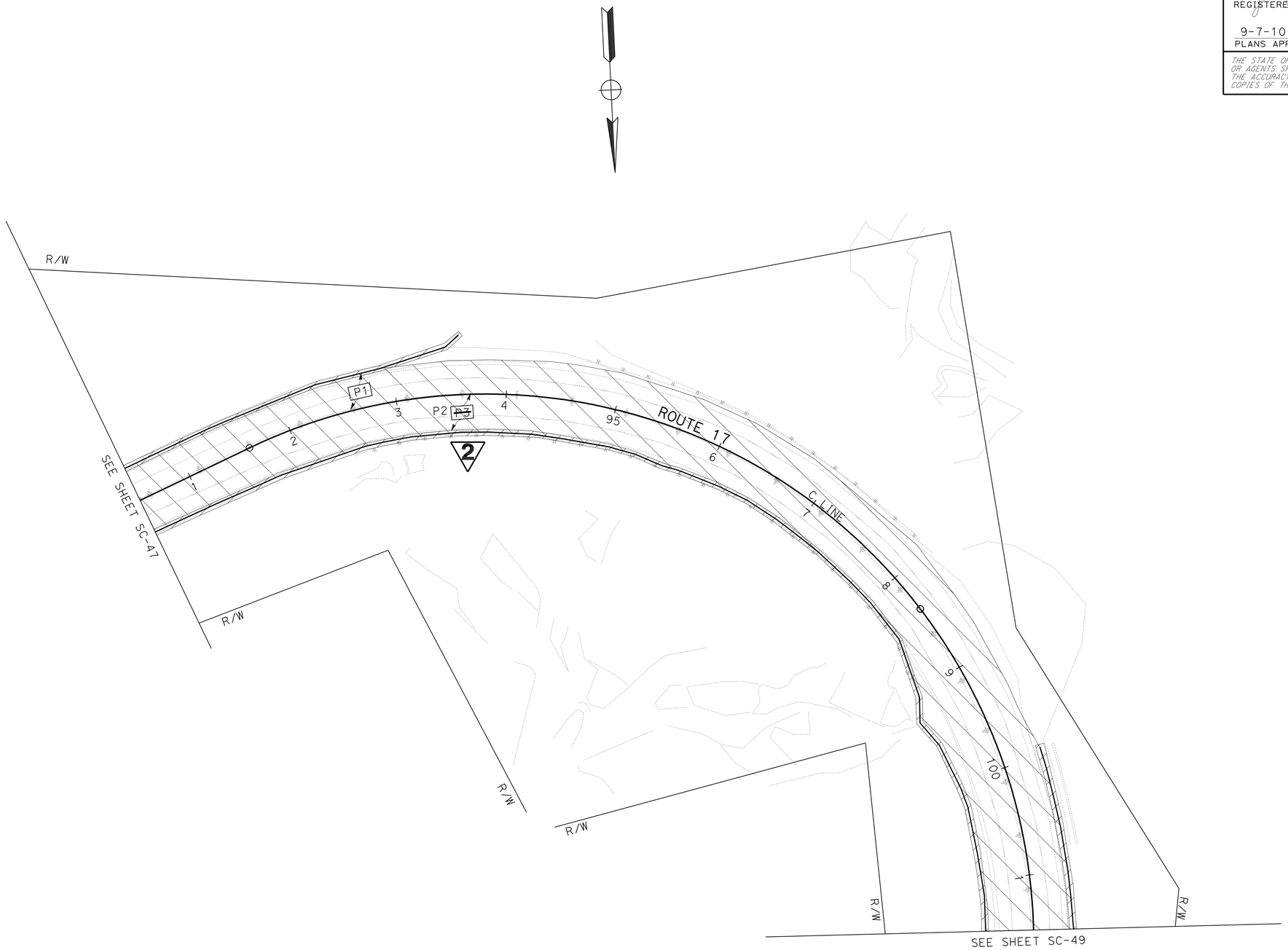

STAGE CONSTRUCTION AND TRAFFIC HANDLING PLAN

STAGE 4

SCALE: 1" = 50'

2 REVISED PER ADDENDUM No. 2 DATED FEBRUARY 28, 2011

FOR NOTES, ABBREVIATIONS AND LEGEND, SEE SHEET SC-1

THIS PLAN ACCURATE FOR STAGE CONSTRUCTION AND TRAFFIC HANDLING WORK ONLY

SC-48

STATE OF CALIFORNIA - DEPARTMENT OF TRANSPORTATION
Caltrans
DESIGN

FUNCTIONAL SUPERVISOR: SHAWN ENJILY
CALCULATED-DESIGNED BY: GIANG KHUU
CHECKED BY: JAMES CHUANG
REVISED BY: 3/15/10
DATE REVISED: 3/15/10

LAST REVISION 03-24-10
DATE PLOTTED => 23-FEB-2011
TIME PLOTTED => 10:32

Dist	COUNTY	ROUTE	POST MILES TOTAL PROJECT	SHEET No.	TOTAL SHEETS
04	SCI	17	0.0/2.8	206	278

REGISTERED CIVIL ENGINEER 3-26-10 DATE

9-7-10
PLANS APPROVAL DATE

REGISTERED PROFESSIONAL ENGINEER James Chuang No. 74690 Exp. 12-31-11 CIVIL STATE OF CALIFORNIA

THE STATE OF CALIFORNIA OR ITS OFFICERS OR AGENTS SHALL NOT BE RESPONSIBLE FOR THE ACCURACY OR COMPLETENESS OF SCANNED COPIES OF THIS PLAN SHEET.

FOR ACCURATE RIGHT OF WAY AND ACCESS DATA, CONTACT RIGHT OF WAY ENGINEERING AT THE DISTRICT OFFICE.

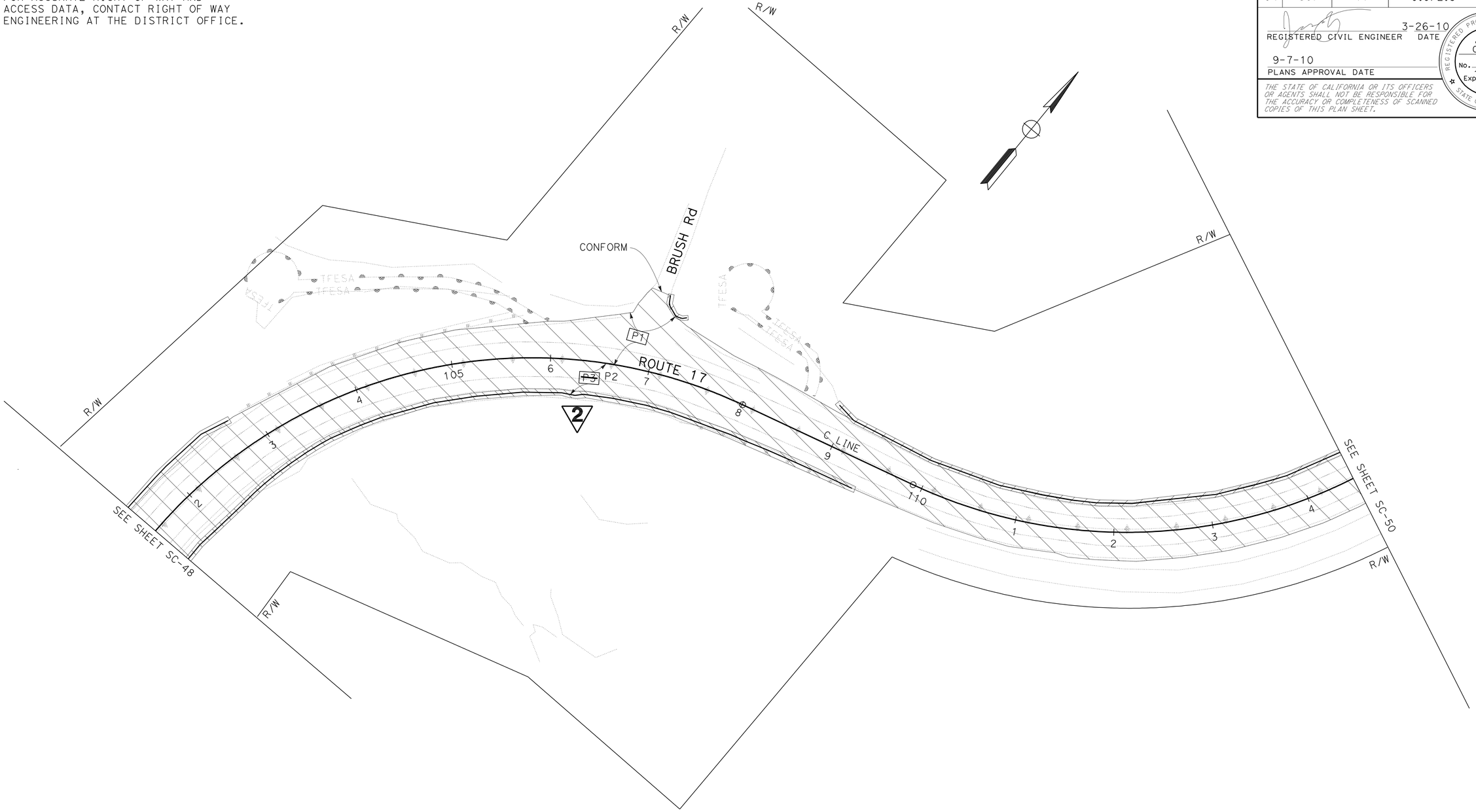

STAGE CONSTRUCTION AND TRAFFIC HANDLING PLAN

STAGE 4

SCALE: 1" = 50'

2 REVISED PER ADDENDUM No. 2 DATED FEBRUARY 28, 2011

FOR NOTES, ABBREVIATIONS AND LEGEND, SEE SHEET SC-1

THIS PLAN ACCURATE FOR STAGE CONSTRUCTION AND TRAFFIC HANDLING WORK ONLY

SC-49

REVISED BY	DATE REVISED
GIANG KHUU	3/15/10
JAMES CHUANG	3/15/10

CALCULATED-DESIGNED BY
CHECKED BY

FUNCTIONAL SUPERVISOR
SHAWN ENJILY

STATE OF CALIFORNIA - DEPARTMENT OF TRANSPORTATION
Caltrans
DESIGN

LAST REVISION 03-24-10 | DATE PLOTTED => 23-FEB-2011 | TIME PLOTTED => 10:42

Dist	COUNTY	ROUTE	POST MILES TOTAL PROJECT	SHEET No.	TOTAL SHEETS
04	SCI	17	0.0/2.8	207	278

REGISTERED CIVIL ENGINEER 3-26-10 DATE

9-7-10
PLANS APPROVAL DATE

REGISTERED PROFESSIONAL ENGINEER James Chuang No. 74690 Exp. 12-31-11 CIVIL STATE OF CALIFORNIA

THE STATE OF CALIFORNIA OR ITS OFFICERS OR AGENTS SHALL NOT BE RESPONSIBLE FOR THE ACCURACY OR COMPLETENESS OF SCANNED COPIES OF THIS PLAN SHEET.

FOR ACCURATE RIGHT OF WAY AND ACCESS DATA, CONTACT RIGHT OF WAY ENGINEERING AT THE DISTRICT OFFICE.

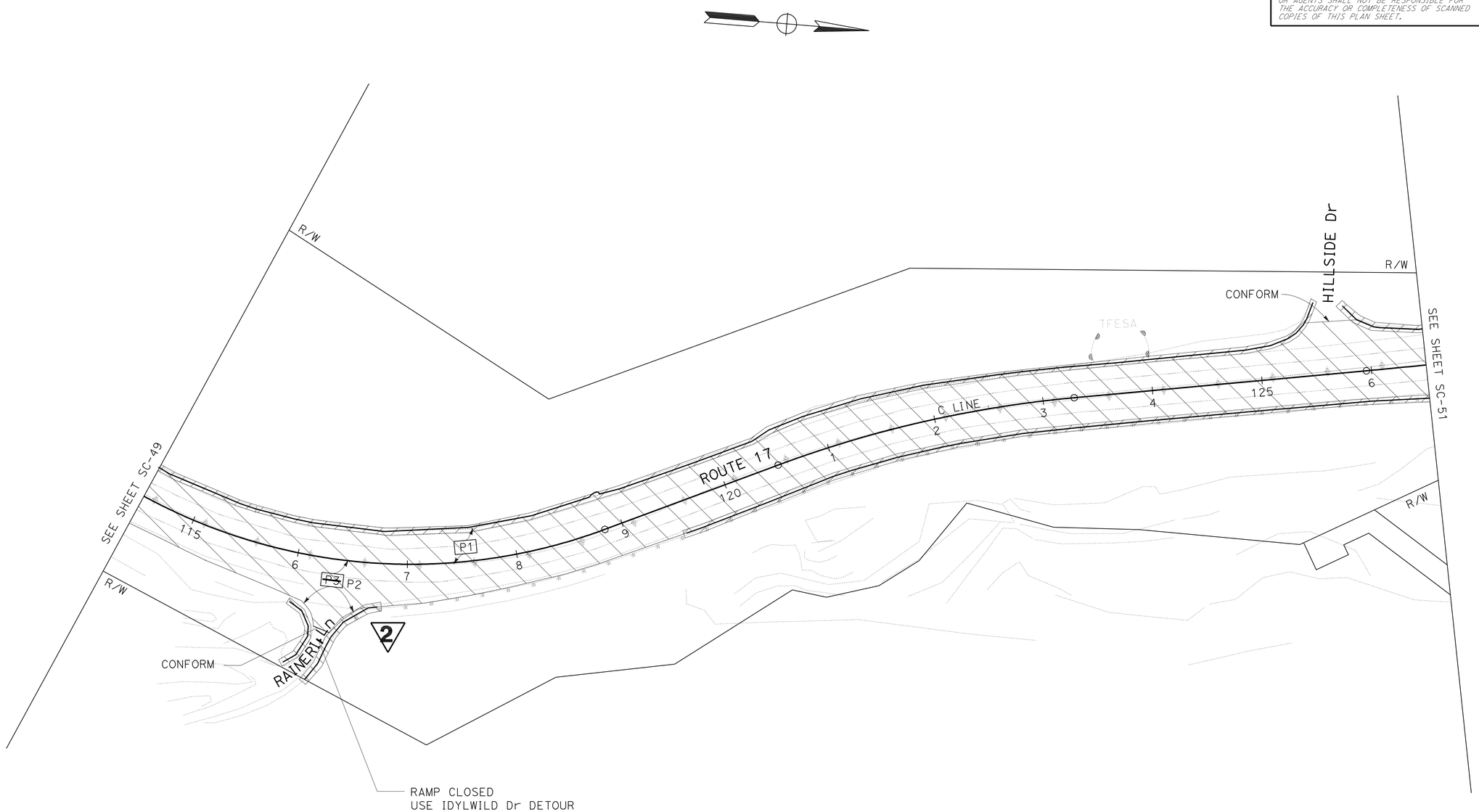

STAGE CONSTRUCTION AND TRAFFIC HANDLING PLAN

STAGE 4

SCALE: 1" = 50'

2 **REVISED PER ADDENDUM No. 2 DATED FEBRUARY 28, 2011**

FOR NOTES, ABBREVIATIONS AND LEGEND, SEE SHEET SC-1

THIS PLAN ACCURATE FOR STAGE CONSTRUCTION AND TRAFFIC HANDLING WORK ONLY

SC-50

REVISED BY	DATE REVISED
GIANG KHUU	3/15/10
JAMES CHUANG	3/15/10

CALCULATED-DESIGNED BY
CHECKED BY

FUNCTIONAL SUPERVISOR
SHAWN ENJILY

STATE OF CALIFORNIA - DEPARTMENT OF TRANSPORTATION
Caltrans
DESIGN

LAST REVISION 03-24-10
DATE PLOTTED => 23-FEB-2011
TIME PLOTTED => 10:43

Dist	COUNTY	ROUTE	POST MILES TOTAL PROJECT	SHEET No.	TOTAL SHEETS
04	SCI	17	0.0/2.8	208	278

REGISTERED CIVIL ENGINEER 3-26-10 DATE

9-7-10
PLANS APPROVAL DATE

REGISTERED PROFESSIONAL ENGINEER
James Chuang
No. 74690
Exp. 12-31-11
CIVIL
STATE OF CALIFORNIA

THE STATE OF CALIFORNIA OR ITS OFFICERS OR AGENTS SHALL NOT BE RESPONSIBLE FOR THE ACCURACY OR COMPLETENESS OF SCANNED COPIES OF THIS PLAN SHEET.

FOR ACCURATE RIGHT OF WAY AND ACCESS DATA, CONTACT RIGHT OF WAY ENGINEERING AT THE DISTRICT OFFICE.

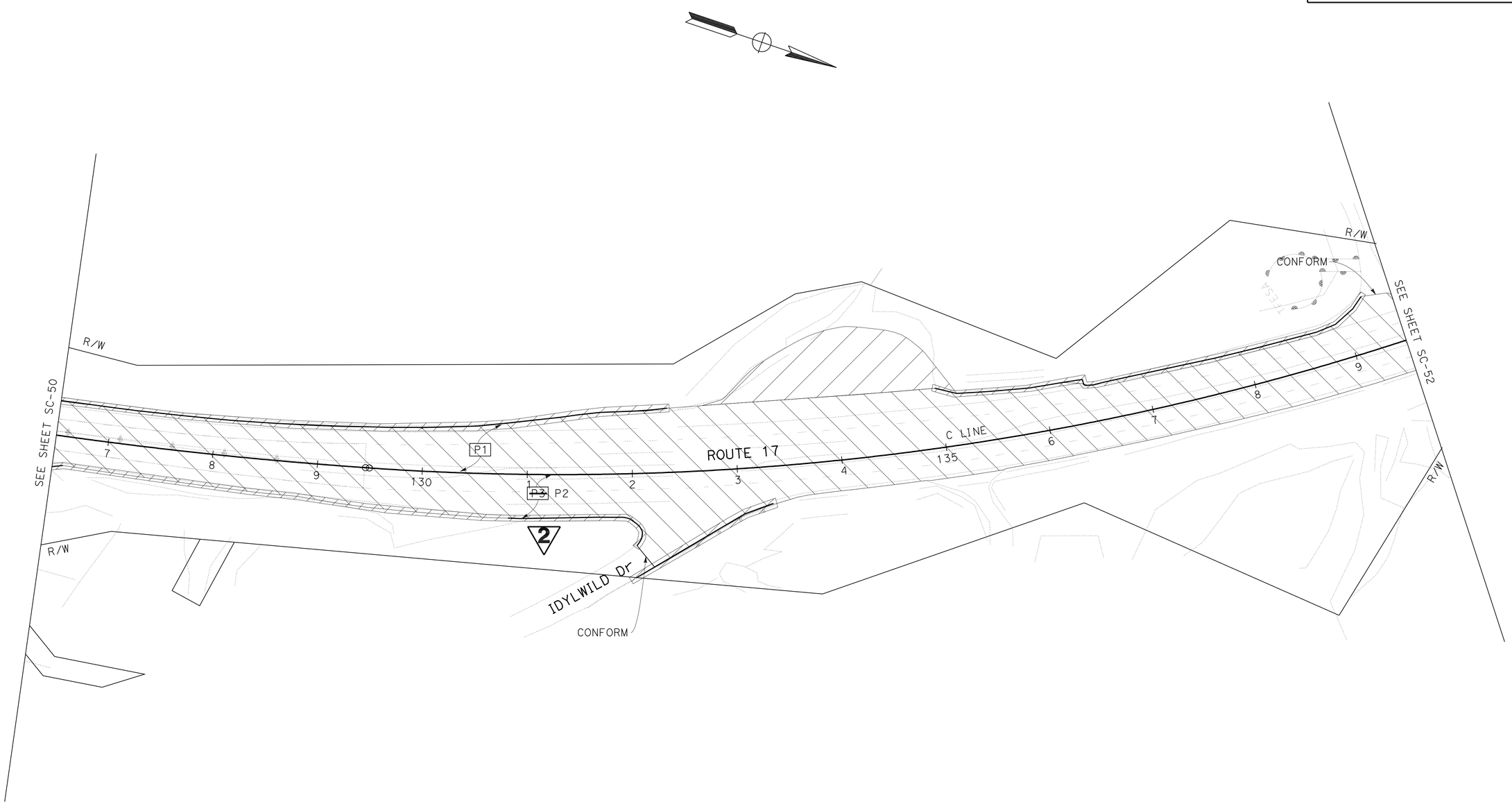

STAGE CONSTRUCTION AND TRAFFIC HANDLING PLAN
STAGE 4

SCALE: 1" = 50'

2 REVISED PER ADDENDUM No. 2 DATED FEBRUARY 28, 2011

FOR NOTES, ABBREVIATIONS AND LEGEND, SEE SHEET SC-1

THIS PLAN ACCURATE FOR STAGE CONSTRUCTION AND TRAFFIC HANDLING WORK ONLY

SC-51

REVISED BY	GIANG KHUU
DATE REVISED	3/15/10
CALCULATED-DESIGNED BY	JAMES CHUANG
CHECKED BY	
FUNCTIONAL SUPERVISOR	SHAWN ENJILY

STATE OF CALIFORNIA - DEPARTMENT OF TRANSPORTATION
Caltrans
DESIGN

LAST REVISION 12-09-09
DATE PLOTTED => 23-FEB-2011
TIME PLOTTED => 10:43

Dist	COUNTY	ROUTE	POST MILES TOTAL PROJECT	SHEET No.	TOTAL SHEETS
04	SCI	17	0.0/2.8	209	278

REGISTERED CIVIL ENGINEER 3-26-10 DATE

9-7-10
PLANS APPROVAL DATE

REGISTERED PROFESSIONAL ENGINEER
James Chuang
No. 74690
Exp. 12-31-11
CIVIL
STATE OF CALIFORNIA

THE STATE OF CALIFORNIA OR ITS OFFICERS OR AGENTS SHALL NOT BE RESPONSIBLE FOR THE ACCURACY OR COMPLETENESS OF SCANNED COPIES OF THIS PLAN SHEET.

FOR ACCURATE RIGHT OF WAY AND ACCESS DATA, CONTACT RIGHT OF WAY ENGINEERING AT THE DISTRICT OFFICE.

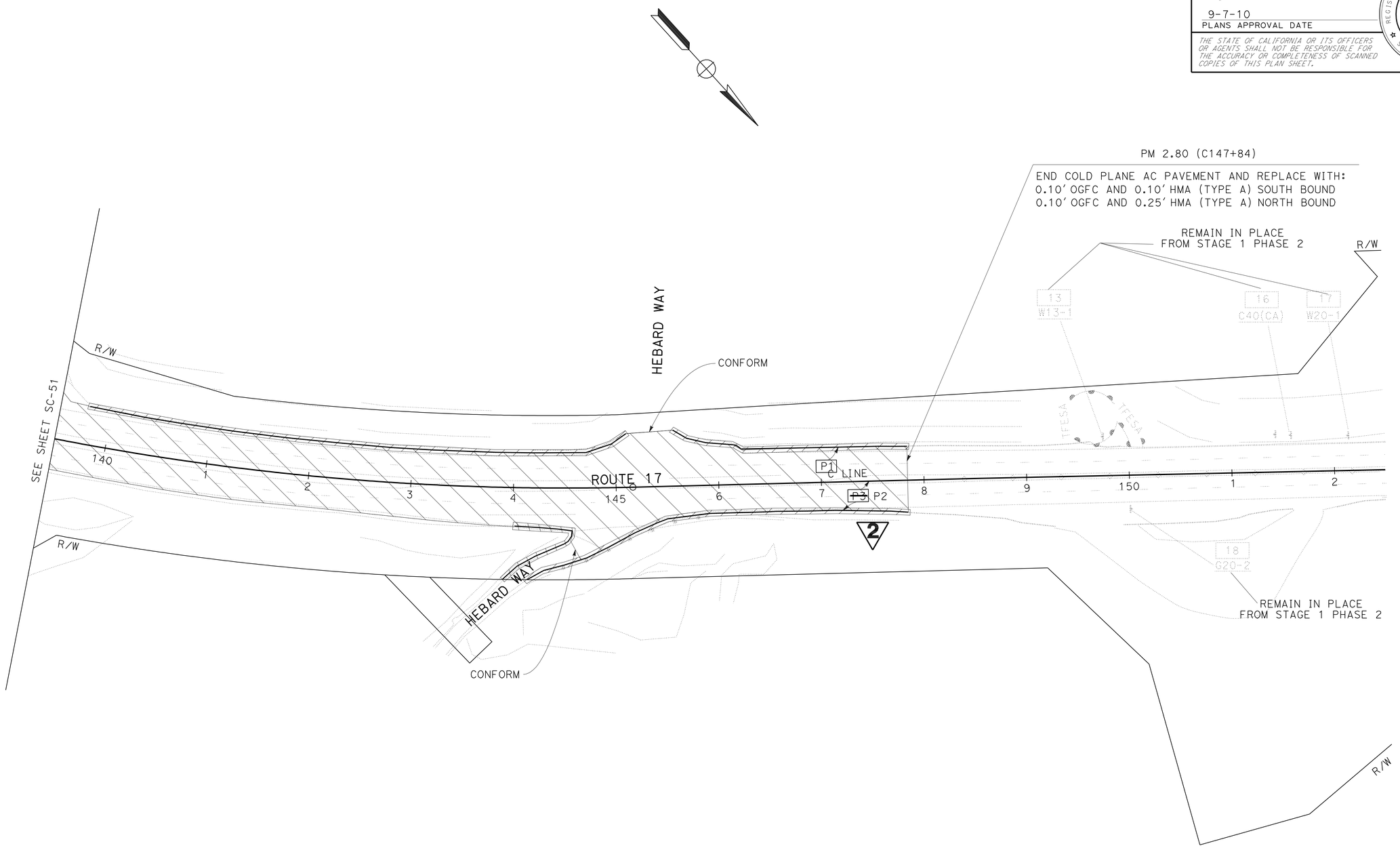

STAGE CONSTRUCTION AND TRAFFIC HANDLING PLAN

STAGE 4

SCALE: 1" = 50'

2 **REVISED PER ADDENDUM No. 2 DATED FEBRUARY 28, 2011**

FOR NOTES, ABBREVIATIONS AND LEGEND, SEE SHEET SC-1

THIS PLAN ACCURATE FOR STAGE CONSTRUCTION AND TRAFFIC HANDLING WORK ONLY

SC-52

REVISED BY	GIANG KHUU
DATE REVISED	3/15/10
CALCULATED-DESIGNED BY	JAMES CHUANG
CHECKED BY	
FUNCTIONAL SUPERVISOR	SHAWN ENJILY

STATE OF CALIFORNIA - DEPARTMENT OF TRANSPORTATION
Caltrans
DESIGN

LAST REVISION 03-24-10 | DATE PLOTTED => 23-FEB-2011 | TIME PLOTTED => 10:43

Dist	COUNTY	ROUTE	POST MILES TOTAL PROJECT	SHEET No.	TOTAL SHEETS
04	SCI	17	0.0/2.8	231	278

REGISTERED CIVIL ENGINEER 3-26-10 DATE

9-7-10
PLANS APPROVAL DATE

REGISTERED PROFESSIONAL ENGINEER James Chuang No. 74690 Exp. 12-31-11 CIVIL STATE OF CALIFORNIA

THE CTE OF CALIFORNIA OR ITS OFFICERS OR AGENTS SHALL NOT BE RESPONSIBLE FOR THE ACCURACY OR COMPLETENESS OF SCANNED COPIES OF THIS PLAN SHEET.

2

ROADWAY QUANTITIES

SHEET No.	LOCATION		COLD PLANE AC PAVEMENT	HOT MIX ASPHALT (OPEN GRADED)	HOT MIX ASPHALT HMA (TYPE A)			ASPHALTIC EMULSION (PAINT BINDER)	CLASS 4 AGGREGATE SUBBASE	ROADWAY EXCAVATION	ROADWAY EXCAVATION (TYPE Z-2) (AERIALLY DEPOSITED LEAD)	COMPACTION GROUTING
					SB	NB	TOTAL					
	BEGIN	END	SQYD	TON					CY	CY	CY	CF
L-1	0+00	13+50	12720	859	431	1068	1499	5.30			27.23	
L-2	13+50	25+50	8769	592	299	732	1031	3.66			3.34	
L-3	25+50	38+50	9288	627	292	839	1131	3.87			6.20	
L-4	38+50	52+50	10199	688	381	769	1150	4.25			15.56	
L-5	52+50	65+50	9186	620	323	744	1067	3.83			82.72	6530
L-5	MADRONE Dr						168	0.42				
L-6	65+50	78+50	9141	617	301	790	1091	3.81			12.50	
L-7	78+50	90+50	8769	592	275	793	1068	3.66			101.68	
L-8	90+50	101+50	8812	595	318	692	1010	3.67			7.11	
L-9	101+50	114+50	9803	662	344	795	1139	4.09			2.22	
L-10	114+50	126+50	8182	552	278	686	964	3.41			10.16	
L-11	126+50	139+50	11517	773	412	913	1325	4.80			4.20	
L-11	PULL OUT (SB)						150	0.19				
L-12	139+50	147+84	6511	440	219	552	771	2.72			27.08	
SUBTOTAL			112897	7617	3873	9373	13564	47.68			300.00	
FROM HMA DIKE SB							368					
FROM HMA DIKE NB							164					
MAINTAIN SHOULDERS average 2.8 mi *2*3'							1663	1.65	1643	2464		
4 ACOD							6					
TOTAL			112897	7617			15765	49.33	1643	2464	300.00	6530

RAILING AND CRASH CUSHION

LOCATION		DIRECTION	REMOVE MBGR	MBGR	TRANSITION RAILING (TYPE WB)	TERMINAL SYSTEM (TYPE SRT)	END ANCHOR ASSEMBLY (TYPE SFT)	END CAP (TYPE A)	END SECTION	REMOVE CRASH CUSHION	ADJUST MBGR	CRASH CUSHION TYPE (CAT)	
												(CAT)	BACK UP
BEGIN	END	NB	F†		EA						F†	EA	
2+34	3+07	NB	82	82		1	1						
6+81	7+60	NB	86	86	1	1		1					
13+77	15+54	NB	167	167				1					
26+37	34+58	NB	608	838		1							
54+77	59+96	NB	547	547	1	1		1					
61+30	66+15	NB	280	508				1					
68+51	74+61	NB	603	603		1							
81+10	83+34	NB	384	235		1							
92+50	98+92	NB	642	642		1							
102+76	103+47	NB	65	65		1							
107+46	109+25	NB	176	176		1							
116+48	126+58	NB	1024	1024		1							
132+42	133+32	NB	102	102		1	1						
144+30	145+91	NB	172	172			1		1				
48+64	48+94	SB	32	32					1				
61+32	62+25	SB			1						100		
94+66	98+06	SB	366	366		1							
102+88	105+74	SB	305	305		1							
129+09	129+40	MEDIAN								1		1	1
TOTAL			5641	5950	3	13	3	4	2	1	100	1	1

CONCRETE BARRIER

LOCATION		DIRECTION	REMOVE CONCRETE BARRIER (TYPE 50)	CONCRETE BARRIER (TYPE 60)	REMOVE CONCRETE BARRIER (TYPE K)	TEMPORARY RAILING (TYPE K)
BEGIN	END		F†			
39+91	49+37	NB	946	946		
61+30	63+46	NB			216	
81+50	83+34	NB				184
12+53	16+59	SB		406	406	
0+00	129+09	MEDIAN	12775	12775		
TOTAL			13721	14127	622	184

TRANSITION ANCHOR BLOCK QUANTITIES

LOCATION		DIRECTION	EXCAVATION (N)	BACKFILL (N)	MINOR CONCRETE (MINOR STRUCTURE)	DRILL AND BOND DOWEL	BAR REINFORCING STEEL (N)
STA	PM		CY			F†	LB
7+60	0.14	NB	0.51	0.51	0.68	6.0	155
59+96	1.14	NB	0.51	0.51	0.68	6.0	155
61+33	1.16	SB	0.51	0.51	0.68	6.0	155
TOTAL			1.53	1.53	2.04	18.0	465

(N) = NOT A SEPARATE PAY ITEM, FOR INFORMATION ONLY

2 **REVISED PER ADDENDUM No. 2 DATED FEBRUARY 28, 2011**

NOTES:

1. AREAS P1, P2 PLEASE SEE TYPICAL CROSS SECTIONS AND LAYOUT PLANS.
2. PAINT BINDER : 2 COATS APPLIED PER AREA.
3. AC DIKE FOR MADRONE Dr/REDWOOD Dr.

HMA DIKE (SOUTH BOUND)

LOCATION		REMOVE AC DIKE	PLACE HMA DIKE (TYPE A)	PLACE HMA DIKE (TYPE E)	PLACE HMA DIKE (TYPE F)	HOT MIX ASPHALT (TYPE A)	REMARKS
BEGIN	END		F†			TON	
0+00	7+02	737	737			20.15	
4+86	6+21	287		287		7.56	
4+93	12+53	738	479	259		19.91	
16+59	20+29	394					
21+22	59+81	3902	3204	666	32	105.55	
61+33	62+25				100	1.34	
61+62	66+15	936	936			25.59	SEE NOTE 3
63+03	93+47	3049	2955	94		83.25	
99+93	102+75	303	303			8.28	
107+03	107+22			34		0.90	
108+89	125+53	1640	1446	194		44.64	
125+79	132+32	659	659			18.02	
134+97	139+21	430	288	142		11.61	
139+78	145+11	530	530			14.49	
145+57	147+84	232	232			6.34	
TOTAL TO ROADWAY QUANTITY						368.00	
TOTAL		13837	11769	1676	132		

HMA DIKE (NORTH BOUND)

LOCATION		REMOVE AC DIKE	PLACE HMA DIKE (TYPE A)	PLACE HMA DIKE (TYPE C)	PLACE HMA DIKE (TYPE E)	PLACE HMA DIKE (TYPE F)	HOT MIX ASPHALT (TYPE A)
BEGIN	END	F†					TON
0+00	4+26	640	532	108			15.37
4+93	7+60	135	274	55	158	62	12.90
13+77	16+26	167			80	167	4.33
21+94	39+91	1851	427	62	515	103	27.09
49+37	59+96	1078	476	96			13.75
63+46	66+15	284					
67+10	84+96	1643	302	62	655	802	36.70
87+47	109+36	2081	645	202	498	736	42.13
116+01	116+05				72		1.90
116+23	116+75			98			0.75
119+52	132+03	1278			149	702	13.30
132+01	133+32	101		50	22	77	1.99
143+91	144+03				142		3.74
144+15	147+84	367		44	193	147	7.38
TOTAL TO ROADWAY QUANTITY							164.00
TOTAL		9625	2656	777	2404	2796	

SUMMARY OF QUANTITIES

Q-1

CTE OF CALIFORNIA - DEPARTMENT OF TRANSPORTATION
Caltrans DESIGN
FUNCTIONAL SUPERVISOR: SHAWN ENJILY
CALCULATED-DESIGNED BY: GIANG KHUU
CHECKED BY: JAMES CHUANG
REVISED BY: 3/15/10
DATE REVISED: 3/15/10

LAST REVISION DATE PLOTTED => 23-FEB-2011
07-26-10 TIME PLOTTED => 10:43