DIST	COUNTY	ROUTE	KILOMETER POST TOTAL PROJECT	SHEET No	TOTAL SHEETS
04	CC	4	37.9/41.3	913	1086

REGISTERED CIVIL ENGINEER 02/08/08 DATE

9-21-09
PLANS APPROVAL DATE

REGISTERED PROFESSIONAL ENGINEER CHAO GONG No. C53837 Exp. 09/30/09 CIVIL STATE OF CALIFORNIA

The State of California or its officers or agents shall not be responsible for the accuracy or completeness of electronic copies of this plan sheet.

CONTRA COSTA TRANSPORTATION AUTHORITY
3478 BUSKIRK AVENUE, SUITE 100
PLEASANT HILL, CA 94523

URS
3440 VINCENT ROAD
PLEASANT HILL, CA 94523

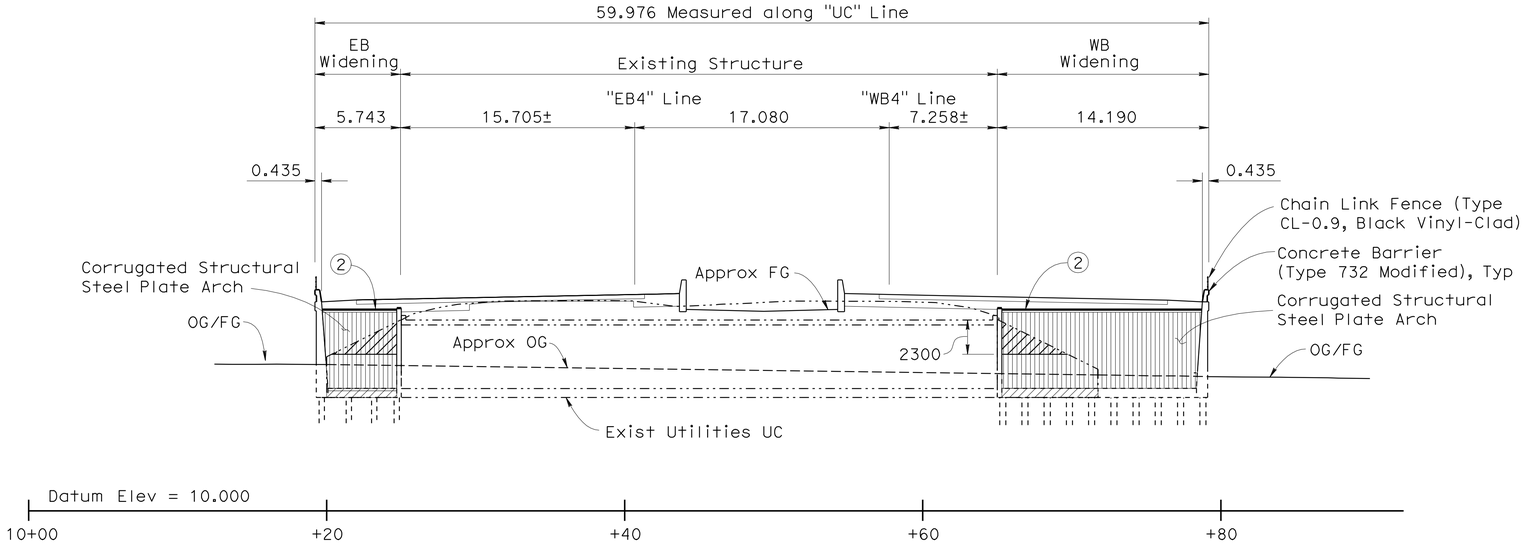

ELEVATION
1:200

INDEX TO PLANS

SHEET No.	TITLE
1	GENERAL PLAN NO. 1
2	GENERAL PLAN NO. 2
3	FOUNDATION PLAN
4	PILE LAYOUT
5	PILE DETAILS
6	STEEL PLATE ARCH DETAILS
7	FRONT END WALL DETAILS
8	BACK END WALL DETAILS
9	MISCELLANEOUS DETAILS
10	LOG OF TEST BORINGS 1 OF 4
11	LOG OF TEST BORINGS 2 OF 4
12	LOG OF TEST BORINGS 3 OF 4
13	LOG OF TEST BORINGS 4 OF 4

Notes:

1. For "Typical Section" see "General Plan No. 2" sheet.
2. For "Pile Data Table" see "Pile Details" sheet.
3. For "Standard Plan List" see "General Plan No. 2" sheet.

GENERAL NOTES
LOAD FACTOR DESIGN

DESIGN:	CALTRANS BRIDGE DESIGN SPECIFICATIONS - LFD Version April 2000 (1996 AASHTO with interims and revisions by CALTRANS)
LIVE LOADING:	HS20-44 and Alternative and Permit Design Load.
REINFORCED CONCRETE:	fy = 420 MPa f'c = 28 MPa (unless otherwise shown or specified)
PILES:	See "Pile Data Table" on "Foundation Plan" sheet.
CORRUGATED STRUCTURAL STEEL PLATE ARCH:	Fy = 228 MPa

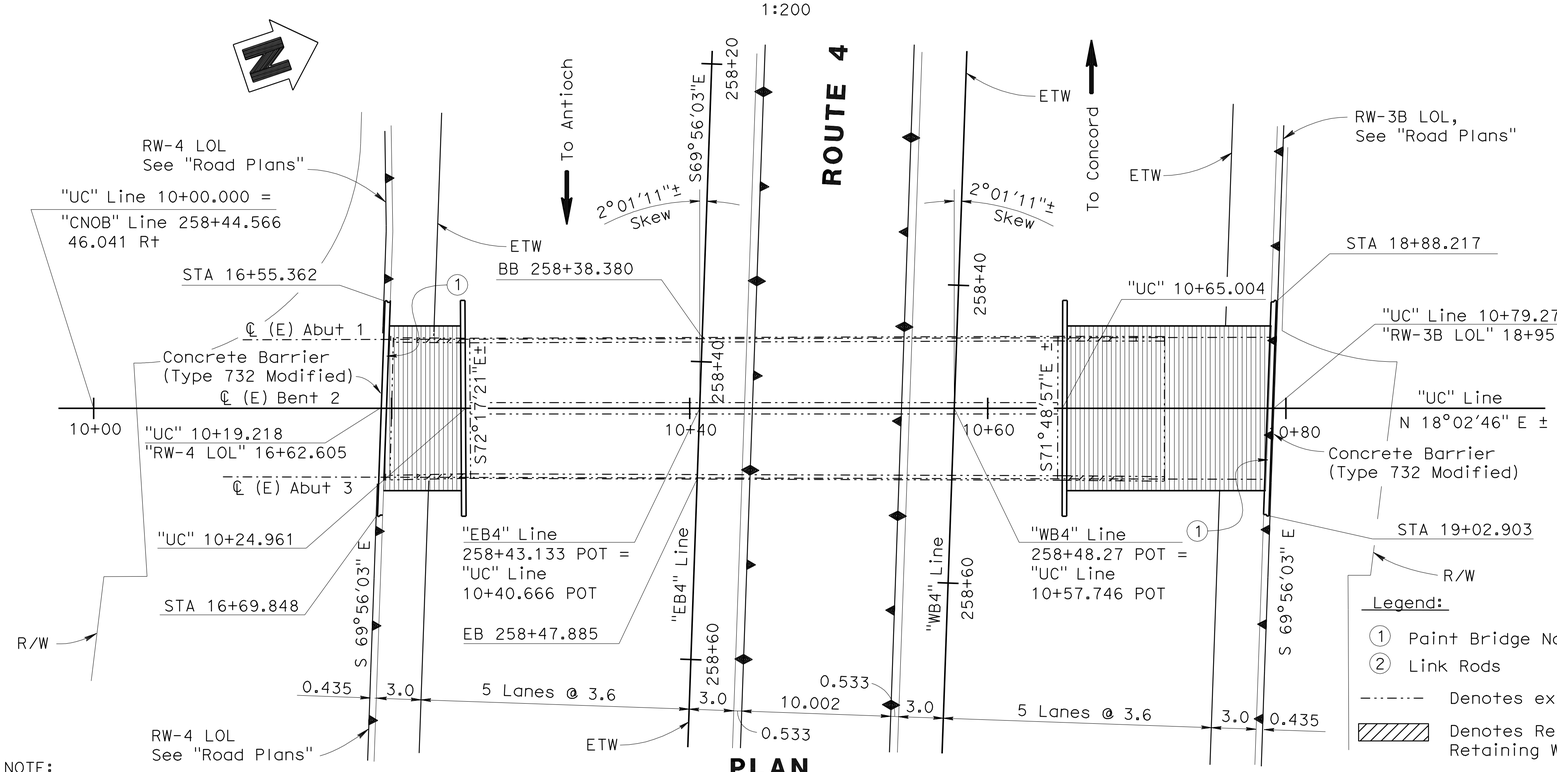

PLAN
1:200

Legend:

1. Paint Bridge No. 28-0105
2. Link Rods

Denotes existing structure

Denotes Removed Retaining Wall (Portion)

Denotes direction of traffic

QUANTITIES

REMOVE RETAINING WALL (PORTION)	LUMP SUM	
450 MM CAST-IN-DRILLED-HOLE CONCRETE PILING	317	m
MINOR CONCRETE (MINOR STRUCTURE)	124	m^3
11.05M X 5.33M CORRUGATED STEEL PLATE ARCH (9.65MM THICK)	~~14~~	m
CHAIN LINK FENCE (TYPE CL-0.9 BLACK VINYL-CLAD)	30	m
CONCRETE BARRIER (TYPE 732A MODIFIED)	20 / 30	m

4

4 **REVISED PER ADDENDUM No. 4 DATED JANUARY 26, 2010**

NOTE:
THE CONTRACTOR SHALL VERIFY ALL CONTROLLING FIELD DIMENSIONS BEFORE ORDERING OR FABRICATING ANY MATERIAL.

ALL DIMENSIONS ARE IN METERS UNLESS OTHERWISE SHOWN

	BY	CHECKED				
DESIGN	P. He	C. Gong	LOAD FACTOR DESIGN	LIVE LOADING: HS20-44 AND ALTERNATIVE AND PERMIT DESIGN LOAD		
DETAILS	C. Somera	A. Maldonado	LAYOUT	P. He	C Gong	
QUANTITIES	P. Smith	G. Esper	SPECIFICATIONS	D. Harnagel	PLANS AND SPECS COMPARED W. LaFranchi	

DESIGN OVERSIGHT Emil A. Vergara Jr.
1-14-10
SIGN OFF DATE

PREPARED FOR THE STATE OF CALIFORNIA DEPARTMENT OF TRANSPORTATION

T. Johnson
PROJECT ENGINEER

BRIDGE NO. 28-0105
KP (PM) 39.9(24.8)

UTILITIES UC (WIDEN)
GENERAL PLAN NO. 1

DESIGN GENERAL PLAN SHEET (METRIC) (REV. 10/27/05)

ORIGINAL SCALE IN MILLIMETERS FOR REDUCED PLANS 0 10 20 30 40 50 60 70 80 90 100

CU 04275
EA 228591

DISREGARD PRINTS BEARING EARLIER REVISION DATES

REVISION DATES (PRELIMINARY STAGE ONLY) 10/11/05 01/02/06 01/23/06 02/14/07 10/25/07 02/08/08

SHEET 1 OF 13

FILE => 28-0105-a-gp01.add

USERNAME => friehard DATE PLOTTED=JAN 8-2010 TIME PLOTTED => 14:36

DIST	COUNTY	ROUTE	KILOMETER POST TOTAL PROJECT	SHEET No	TOTAL SHEETS
04	CC	4	37.9/41.3	993	1086

REGISTERED CIVIL ENGINEER 07/18/08 DATE

9-21-09
PLANS APPROVAL DATE

REGISTERED PROFESSIONAL ENGINEER JAMES C. S. KWONG No. C36732 Exp. 06/30/10 CIVIL STATE OF CALIFORNIA

The State of California or its officers or agents shall not be responsible for the accuracy or completeness of electronic copies of this plan sheet.

CONTRA COSTA TRANSPORTATION AUTHORITY
3478 BUSKIRK AVENUE, SUITE 100
PLEASANT HILL, CA 94523

BEYAZ & PATEL, INC.
800 SOUTH BROADWAY, SUITE 200
WALNUT CREEK, CA 94596-5218

Caltrans Metric

4 2

4 REVISED PER ADDENDUM No. 4 DATED JANUARY 26, 2010

PVI Sta = "eBART" Line 79+06.054
PVI Elev = 25.390
K = 101.047

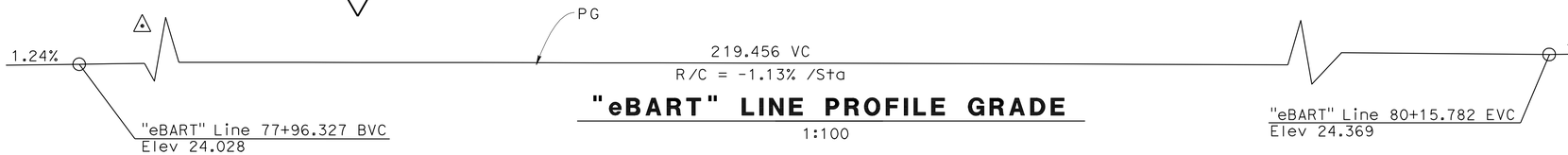

"eBART" LINE PROFILE GRADE

1:100

Legend:

① Paint "Century Blvd UP"
② Paint Bridge No. and Year Completed
Denotes existing structure
Denotes direction of traffic
Denotes min vertical clearance

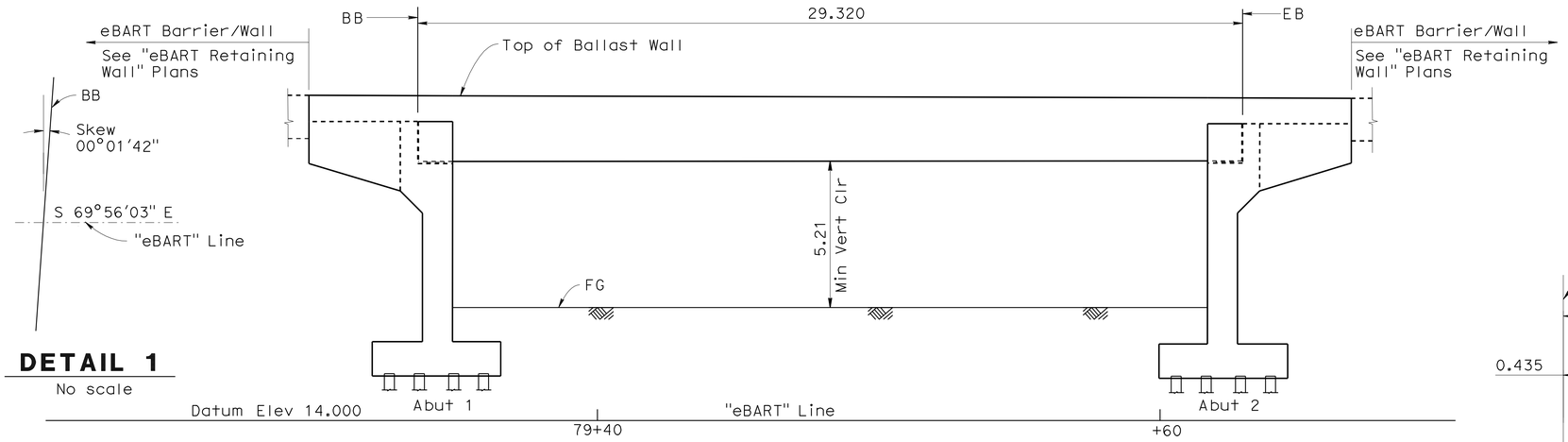

DETAIL 1

No scale

ELEVATION

1:100

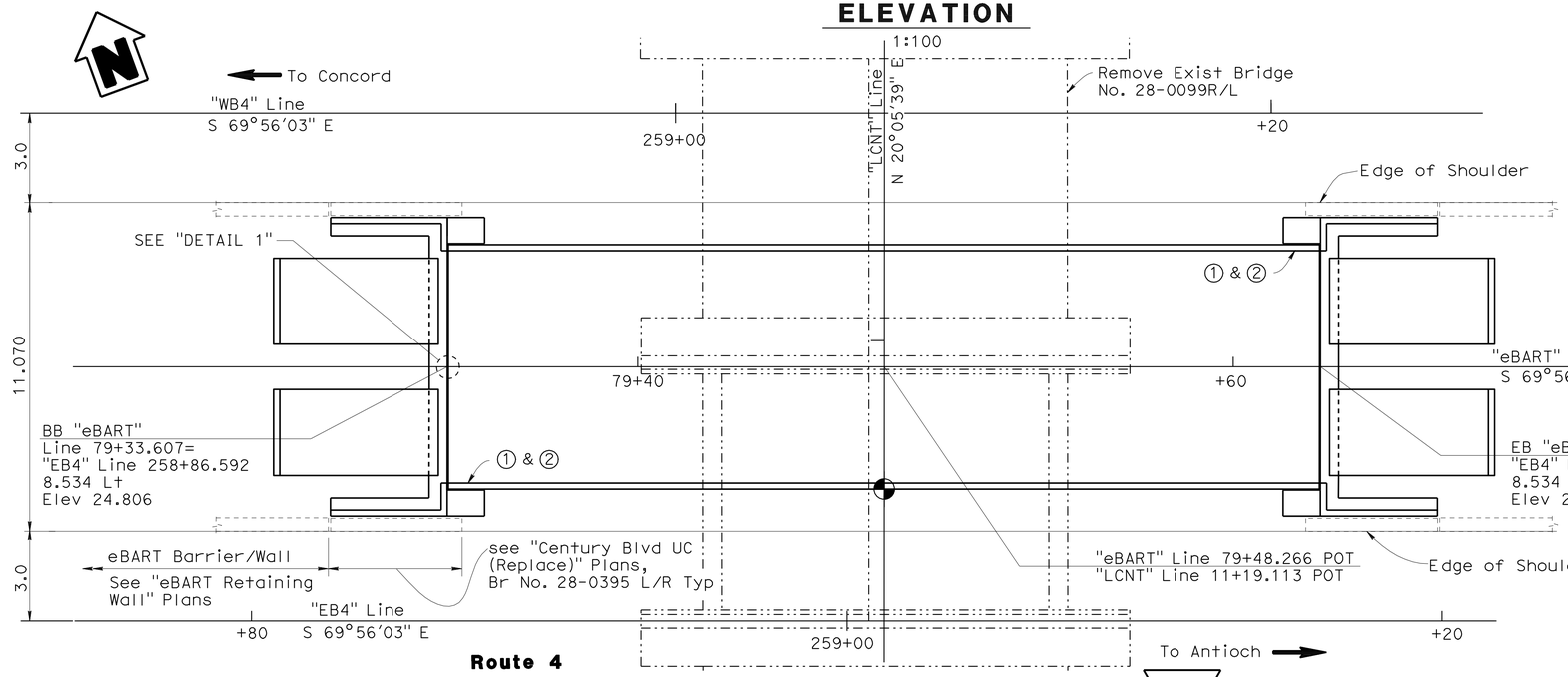

PLAN

1:100

Notes:

1. For "Sheet Index", "General Notes" and "Standard Plans" see "Index To Plans" sheet.
2. For "Pile Data Table" see "Foundation Plan" sheet.

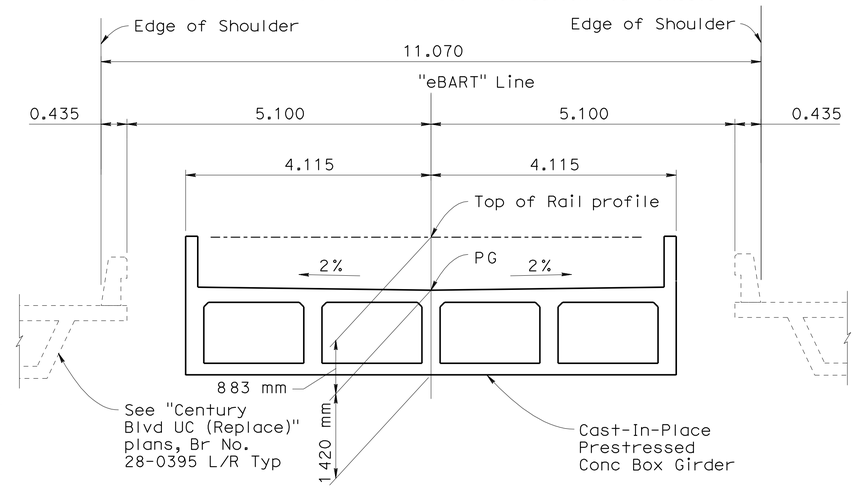

TYPICAL SECTION

1:50

EBART-CENTURY BOULEVARD UP BR NO 28-C0484

QUANTITIES

STRUCTURE EXCAVATION (BRIDGE)	560	m^3
STRUCTURE BACKFILL (BRIDGE)	290	m^3
FURNISH PILING (CLASS 900 MODIFIED)	1162	m
DRIVE PILE (CLASS 900 MODIFIED)	64	EA
PRESTRESSING CAST-IN-PLACE CONCRETE	LUMP	SUM
STRUCTURAL CONCRETE, BRIDGE FOOTING	112	m^3
STRUCTURAL CONCRETE, BRIDGE	390	m^3
STRUCTURAL CONCRETE, APPROACH SLAB	28	m^3
FRACTURED RIB TEXTURE	79	m^2
JOINT SEAL (MR 25 MM)	28	m
BAR REINFORCING STEEL (BRIDGE)	39 300	kg

ALL DIMENSIONS ARE IN METERS UNLESS OTHERWISE SHOWN

2 REVISED PER ADDENDUM No. 2 DATED DECEMBER 30, 2009

DESIGN OVERSIGHT Emil A. Vergara Jr.
1-14-10
SIGN OFF DATE

	BY	CHECKED
DESIGN	M. Hsiao	B. Kattula / R. Hancock
DETAILS	E. Posadas	B. Kattula / R. Hancock
QUANTITIES	T. Palmerino	J. Melillo

LOAD FACTOR DESIGN — LIVE LOADING: HS25-44 AND 2-CAR DOUBLE DECK DMU TRAIN AND 10-CAR BART TRAIN LOADS

	BY	CHECKED
LAYOUT	M. Hsiao	J. Kwong
SPECIFICATIONS	D. Harnagel	PLANS AND SPECS COMPARED T. Palmerino

PREPARED FOR THE STATE OF CALIFORNIA DEPARTMENT OF TRANSPORTATION

James C.S. Kwong
PROJECT ENGINEER

BRIDGE NO. 28C0484
KILOMETER POST 40.0(24.9)

eBART-CENTURY BLVD UP

GENERAL PLAN

DESIGN GENERAL PLAN SHEET (METRIC) (REV. 10/27/05)

ORIGINAL SCALE IN MILLIMETERS FOR REDUCED PLANS 0 10 20 30 40 50 60 70 80 90 100

CU 04275
EA 228591

DISREGARD PRINTS BEARING EARLIER REVISION DATES

REVISION DATES (PRELIMINARY STAGE ONLY) 12/17/07 02/13/08 04/29/08 07/18/08

SHEET 1 OF 10

FILE => 28C0484-a-gp01.add

USERNAME => trrrcht DATE PLOTTED => 21-JAN-2010 TIME PLOTTED => 15:56

DIST	COUNTY	ROUTE	KILOMETER POST TOTAL PROJECT	SHEET No	TOTAL SHEETS
04	CC	4	37.9/41.3	994	1086

REGISTERED CIVIL ENGINEER 07/18/08 DATE

9-21-09
PLANS APPROVAL DATE

REGISTERED PROFESSIONAL ENGINEER JAMES C. S. KWONG No. C36732 Exp. 06/30/10 CIVIL STATE OF CALIFORNIA

The State of California or its officers or agents shall not be responsible for the accuracy or completeness of electronic copies of this plan sheet.

CONTRA COSTA TRANSPORTATION AUTHORITY
3478 BUSKIRK AVENUE, SUITE 100
PLEASANT HILL, CA 94523

BEYAZ & PATEL, INC.
800 SOUTH BROADWAY, SUITE 200
WALNUT CREEK, CA 94596-5218

Caltrans Metric

GENERAL NOTES LOAD FACTOR DESIGN

DESIGN: BART Facilities Standard, version 1.2, released August 18, 2004
CALTRANS BRIDGE DESIGN SPECIFICATIONS - LFD Version April 2000
(1996 AASHTO with interims and revisions by CALTRANS)

SEISMIC DESIGN: BART Facilities Standards, Facility Design-Criteria, Structural-Seismic Design
Caltrans Seismic Design Criteria (SDC) version 1.4, June 2006.

LIVE LOADING: DMU -Colorado Rail Car, Double Deck 2-Car Train, AW3 loading
BART - Standard BART train loading, minimum of 2 cars to maximum of 10 cars

SEISMIC LOADING: See ARS curve below

REINFORCED CONCRETE: fy = 420 Mpa
f'c = 28 Mpa
n = 8

PILES: See "Pile Data Table" on "Foundation Plan" sheet

INDEX TO PLANS

SHEET No.	TITLE
1	GENERAL PLAN
2	INDEX TO PLANS
2A	DECK CONTOURS
3	FOUNDATION PLAN
4	ABUTMENT 1 LAYOUT
5	ABUTMENT 2 LAYOUT
6	ABUTMENT DETAILS No. 1
7	ABUTMENT DETAILS No. 2
7A	ABUTMENT DETAILS No. 3
7B	TYPICAL SECTION
7C	GIRDER LAYOUT
8	LOG OF TEST BORINGS 1 OF 3
9	LOG OF TEST BORINGS 2 OF 3
10	LOG OF TEST BORINGS 3 OF 3

STANDARD PLANS DATED JULY 2004

A10A	ACRONYMS AND ABBREVIATIONS (A-L)
A10B	ACRONYMS AND ABBREVIATIONS (M-Z)
A10C	SYMBOLS (SHEET 1 OF 2)
A10D	SYMBOLS (SHEET 2 OF 2)
A62C	LIMITS OF PAYMENT FOR EXCAVATION AND BACKFILL, BRIDGE
A85	CHAIN LINK FENCE
B0-5	BRIDGE DETAILS
B0-13	BRIDGE DETAILS
RSP B6-21	JOINT SEALS (MAXIMUM MOVEMENT RATING = 50 mm)
B7-1	BOX GIRDER DETAILS
RSP B8-5	CAST-IN-PLACE PRESTRESSED GIRDER DETAILS
B11-55	CONCRETE BARRIER TYPE 732

Standard Plan Sheet No.
Detail No.
- Section Identification

ARS CURVE

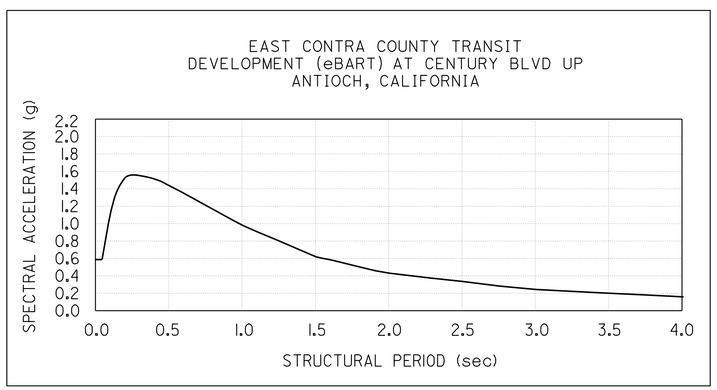

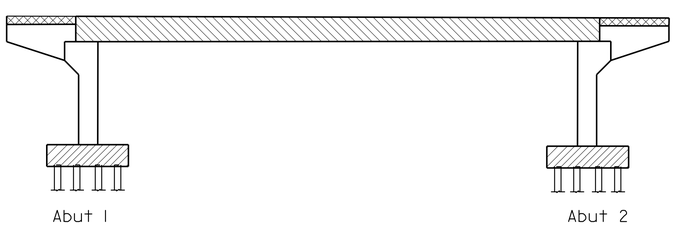

CONCRETE STRENGTH AND TYPE LIMITS

No Scale

- Structural Concrete, Bridge Footing (28 MPa @ 28 days)
- Structural Concrete, Bridge (28 MPa @ 28 days)
- Structural Concrete, Bridge see "Girder Layout"
- Structural Concrete, Structure Approach (28 MPa @ 28 days)

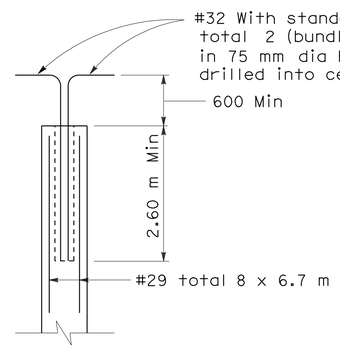

ALTERNATIVE PILE ANCHOR

No Scale

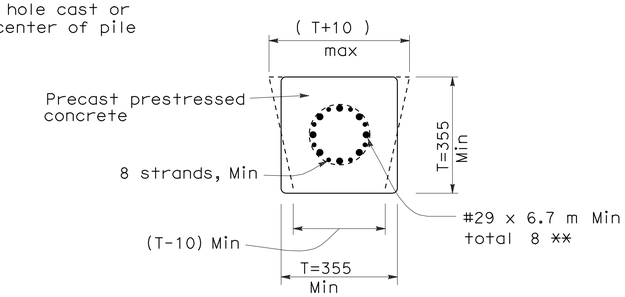

SECTION A-A

No Scale

** To be in place when pile is cast

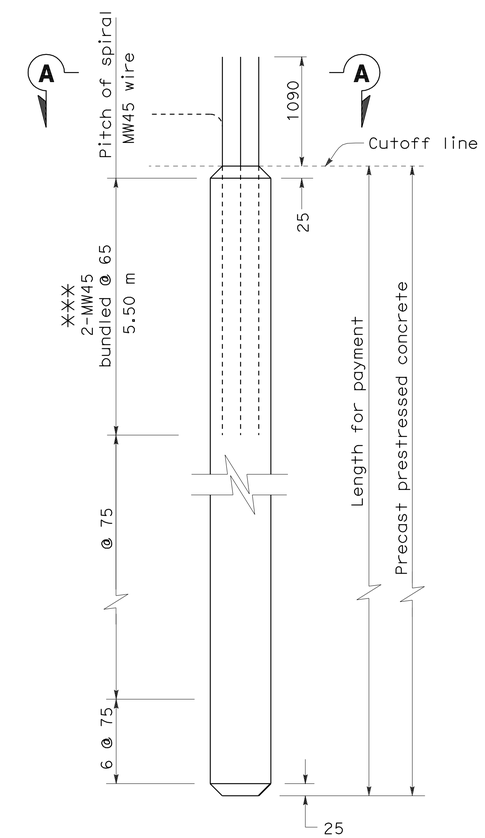

PILE DETAILS

No Scale

*** MW 70 at 50 may be substituted

Notes:

1. Pf = Prestressing force (after losses) shall provide 7 Mpa Minimum.
2. Concrete Strength: f'c @ 28 days = 52.5 Mpa
3. Lapped splices in spiral pile reinforcement shall be lapped 80 wire diameters minimum. Spiral pile reinforcement at splices and at ends shall be terminated by a 135° hook with 150 mm tail hooked around a longitudinal bar or strand.
4. 50 mm clearance to spiral reinforcement shall be maintained.
5. Maximum cutoff length at the top of the Piles is three (3) meters.
6. For longitudinal reinforcement and prestressing for anchor piles and load test piles, see "Load Test Pile Details (2)", Standard Plan B2-10.

4 **REVISED PER ADDENDUM No. 4 DATED JANUARY 26, 2010**

2 **REVISED PER ADDENDUM No. 2 DATED DECEMBER 30, 2009**

ALL DIMENSIONS ARE IN MILLIMETERS UNLESS OTHERWISE SHOWN

DESIGN OVERSIGHT Emil A. Vergara Jr.
1-14-10
SIGN OFF DATE

	BY	CHECKED
DESIGN	T. Palmerino	B. Kattula / R. Hancock
DETAILS	E. Posadas	B. Kattula / R. Hancock
QUANTITIES	T. Palmerino	J. Melillo

PREPARED FOR THE STATE OF CALIFORNIA DEPARTMENT OF TRANSPORTATION

James C.S. Kwong
PROJECT ENGINEER

BRIDGE NO. 28C0484
KILOMETER POST 40.0(24.9)

eBART-CENTURY BLVD UP
INDEX TO PLANS

DESIGN DETAIL SHEET (METRIC) (REV. 10/27/05)

ORIGINAL SCALE IN MILLIMETERS FOR REDUCED PLANS 0 10 20 30 40 50 60 70 80 90 100

CU 04275
EA 228591

DISREGARD PRINTS BEARING EARLIER REVISION DATES

REVISION DATES (PRELIMINARY STAGE ONLY) 12/17/07 02/14/08 04/29/08 07/18/08

SHEET 2 OF 10

FILE => 28C0484-a-itp.add

USERNAME => rfriesnard DATE PLOTTED => 21-JAN-2010 TIME PLOTTED => 14:37

DIST	COUNTY	ROUTE	KILOMETER POST TOTAL PROJECT	SHEET No	TOTAL SHEETS
04	CC	4	37.9/41.3	994A	1086

REGISTERED CIVIL ENGINEER 11/16/09 DATE

9-21-09
PLANS APPROVAL DATE

REGISTERED PROFESSIONAL ENGINEER JAMES C. S. KWONG No. C36732 Exp. 06/30/10 CIVIL STATE OF CALIFORNIA

The State of California or its officers or agents shall not be responsible for the accuracy or completeness of electronic copies of this plan sheet.

CONTRA COSTA TRANSPORTATION AUTHORITY
3478 BUSKIRK AVENUE, SUITE 100
PLEASANT HILL, CA 94523

BEYAZ & PATEL, INC.
800 SOUTH BROADWAY, SUITE 200
WALNUT CREEK, CA 94596-5218

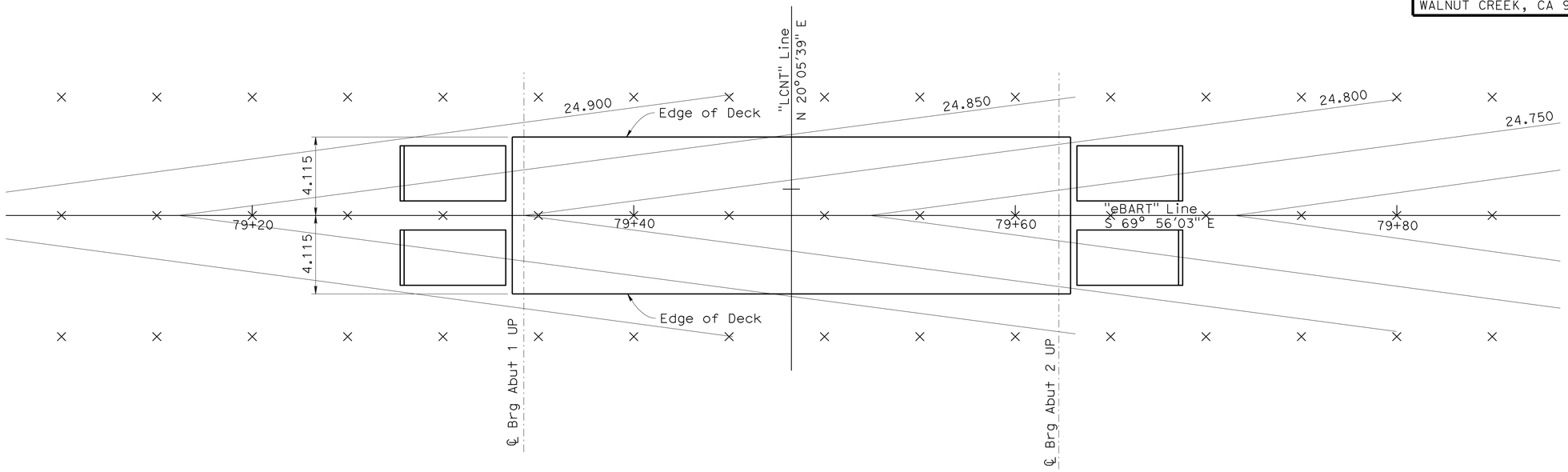

PLAN
1:125

Notes:

1. Contours do not include Camber
2. Contour interval = 0.05 m

Legend:

× Indicates 5 m interval measured along "eBART" Line

4 REVISED PER ADDENDUM No. 4 DATED JANUARY 26, 2010

2 ADDED PER ADDENDUM No. 2 DATED DECEMBER 30, 2009

ALL DIMENSIONS ARE IN METERS UNLESS OTHERWISE SHOWN

DESIGN OVERSIGHT Emil A. Vergara Jr.
1-14-10
SIGN OFF DATE

	BY	CHECKED
DESIGN	T. Palmerino	B. Kattula / R. Hancock
DETAILS	E. Posadas	B. Kattula / R. Hancock
QUANTITIES	T. Palmerino	J. Melillo

PREPARED FOR THE STATE OF CALIFORNIA DEPARTMENT OF TRANSPORTATION

James C.S. Kwong
PROJECT ENGINEER

BRIDGE NO. 28C0484
KILOMETER POST 40.0(24.9)

eBART-CENTURY BLVD UP
DECK CONTOURS

DESIGN DETAIL SHEET (METRIC) (REV. 10/27/05)

ORIGINAL SCALE IN MILLIMETERS FOR REDUCED PLANS 0 10 20 30 40 50 60 70 80 90 100

CU 04275
EA 228591

DISREGARD PRINTS BEARING EARLIER REVISION DATES

REVISION DATES (PRELIMINARY STAGE ONLY) 11/16/09

SHEET 2A OF 10

FILE => 28C0484-d-dc01.dgn

USERNAME => friemard DATE PLOTTED => 21-JAN-2010 TIME PLOTTED => 14:37

DIST	COUNTY	ROUTE	KILOMETER POST TOTAL PROJECT	SHEET No	TOTAL SHEETS
04	CC	4	37.9/41.3	995	1086

REGISTERED CIVIL ENGINEER 07/18/08 DATE

9-21-09
PLANS APPROVAL DATE

REGISTERED PROFESSIONAL ENGINEER JAMES C. S. KWONG No. C36732 Exp. 06/30/10 CIVIL STATE OF CALIFORNIA

The State of California or its officers or agents shall not be responsible for the accuracy or completeness of electronic copies of this plan sheet.

CONTRA COSTA TRANSPORTATION AUTHORITY
3478 BUSKIRK AVENUE, SUITE 100
PLEASANT HILL, CA 94523

BEYAZ & PATEL, INC.
800 SOUTH BROADWAY, SUITE 200
WALNUT CREEK, CA 94596-5218

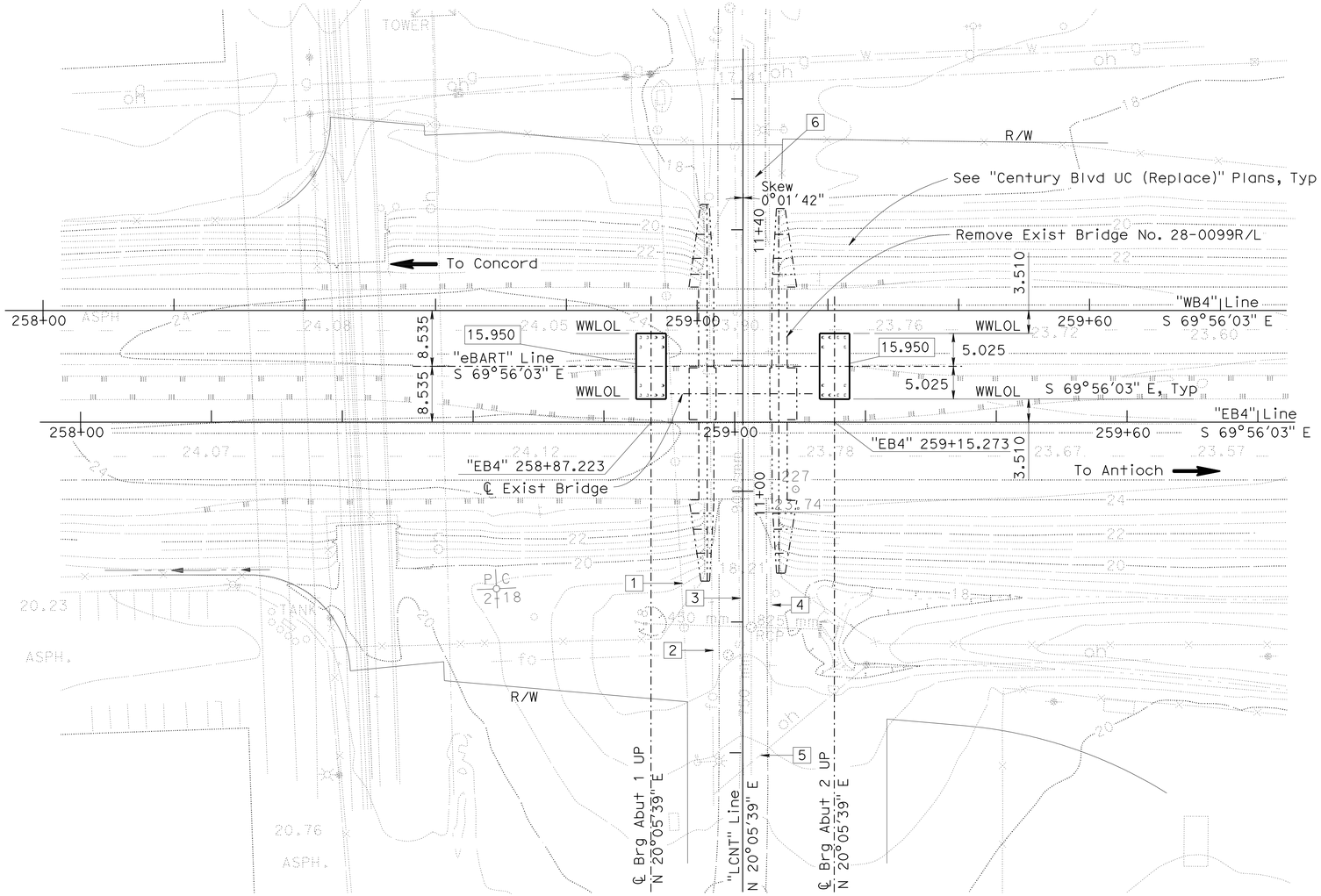

PLAN
1:400

EXISTING UTILITIES

Utility No.	Disposition	Type and Size	Owner
1	Relocate, see "Road Plans"	3W21KV Underground Line	PG & E
2	Protect in Place	Fiber Optic Cable	Comcast
3	Protect in Place	380 mm Sanitary Sewer	DDSD
4	Protect in Place	Telephone	SBC
5	Relocate, see "Road Plans"	3W21KV Overhead Line	PG & E
6	Protect in Place	900 mm Sanitary Sewer	

Legend:

-·-·-·- Denotes existing structure

◄ Denotes direction of traffic

XX.XXX Denotes bottom of footing elevation

Notes:

1. All piles not shown for clarity.
2. Utilities in conflict with footings will be removed or relocated prior to bridge construction by others.
3. For pile locations, see "Abutment 1 Layout" and "Abutment 2 Layout" sheets.
4. For Pile details, see "Index To Plans" sheet.
5. Utilities shown are Approximate. For utility information, see "Road Plans".

CONSTRUCTION CONTROL SURVEY DATA

NO.	MONUMENT	NORTHING	EASTING	ELEV.	DESCRIPTION AND LOCATION
1	BART-185	668761.205	1879751.308	16.434	3.5" DIA BRASS DISC AT NORTHWEST QUADRANT OF LOVERIDGE/ROUTE 4 INTERCHANGE STAMPED "BART CONTROL NO. 185" DISC LIES 26.737m LEFT OF STA. 245+68.164 "WB4" LINE
2	PD158	668267.967	1880990.806	18.260	8" SPIKE 2.1m WESTERLY OF THE WESTERLY EDGE OF CENTURY BLVD. UC @ CC4. 7.43m SOUTH OF ANGLE POINT IN THE CHAINLINK FENCE AT THE BOTTOM OF THE SOUTHWESTERLY WINGWALL OF CENTURY BLVD. UC, 4.1m SOUTH OF THE CHAINLINK FENCE.

BASIS OF COORDINATES: NAD 83, CCS ZONE 3 (1986 ADJUSTMENT)
BASIS OF ELEVATIONS: NGVD29

PILE DATA TABLE

Location	Pile Type	Design Load (kN)	Nominal Resistance (kN)		Design Tip Elevation* (m)	Specified Tip Elev (m)
			Compression	Tension		
Abut 1	Class 900 (modified)	700	1700	850	-1.0 (1); -2.2 (2); 8.0 (3)	-2.2
Abut 2	Class 900 (modified)	700	1700	850	-1.0 (1); -2.2 (2); 8.0 (3)	-2.2

* Design tip elevation is controlled by the following demands:
(1) Compression, (2) Tension, (3) Lateral Loads

4 REVISED PER ADDENDUM No. 4 DATED JANUARY 26, 2010

ALL DIMENSIONS ARE IN METERS UNLESS OTHERWISE SHOWN

GEOTECHNICAL PROFESSIONAL 07/18/08 APPROVAL DATE

DESIGN OVERSIGHT Emil A. Vergara Jr.
1-14-10
SIGN OFF DATE

SCALE:	VERT.DATUM NGVD 29	HORZ.DATUM NAD 83	
PHOTOGRAMMETRY AS OF: 5/23/05		ALIGNMENT TIES	
SURVEYED	BY B. Shives	DRAFTED	BY
FIELD CHECKED	BY AJ Burgess	CHECKED	BY

DESIGN	BY T. Palmerino	CHECKED B. Kattula / R. Hancock
DETAILS	BY E. Posadas	CHECKED B. Kattula / R. Hancock
QUANTITIES	BY T. Palmerino	CHECKED J. Melillo

PREPARED FOR THE STATE OF CALIFORNIA DEPARTMENT OF TRANSPORTATION

James C.S. Kwong
PROJECT ENGINEER

BRIDGE NO. 28C0484
KILOMETER POST 40.0(24.9)

eBART-CENTURY BLVD UP
FOUNDATION PLAN

FOUNDATION PLAN SHEET (METRIC) (REV. 10/27/05)

ORIGINAL SCALE IN MILLIMETERS FOR REDUCED PLANS 0 10 20 30 40 50 60 70 80 90 100

CU 04275
EA 228591

DISREGARD PRINTS BEARING EARLIER REVISION DATES

REVISION DATES (PRELIMINARY STAGE ONLY) 12/17/07 02/28/08 04/29/08 07/18/08

SHEET 3 OF 10

FILE => 28C0484-e-fdp101.add

USERNAME => trlenard DATE PLOTTED => 21-JAN-2010 TIME PLOTTED => 14:37

DIST	COUNTY	ROUTE	KILOMETER POST TOTAL PROJECT	SHEET No	TOTAL SHEETS
04	CC	4	37.9/41.3	996	1086

REGISTERED CIVIL ENGINEER — DATE 07/18/08

9-21-09
PLANS APPROVAL DATE

REGISTERED PROFESSIONAL ENGINEER — JAMES C. S. KWONG — No. C36732 — Exp. 06/30/10 — CIVIL — STATE OF CALIFORNIA

The State of California or its officers or agents shall not be responsible for the accuracy or completeness of electronic copies of this plan sheet.

CONTRA COSTA TRANSPORTATION AUTHORITY
3478 BUSKIRK AVENUE, SUITE 100
PLEASANT HILL, CA 94523

BEYAZ & PATEL, INC.
800 SOUTH BROADWAY, SUITE 200
WALNUT CREEK, CA 94596-5218

4 2 Caltrans Metric

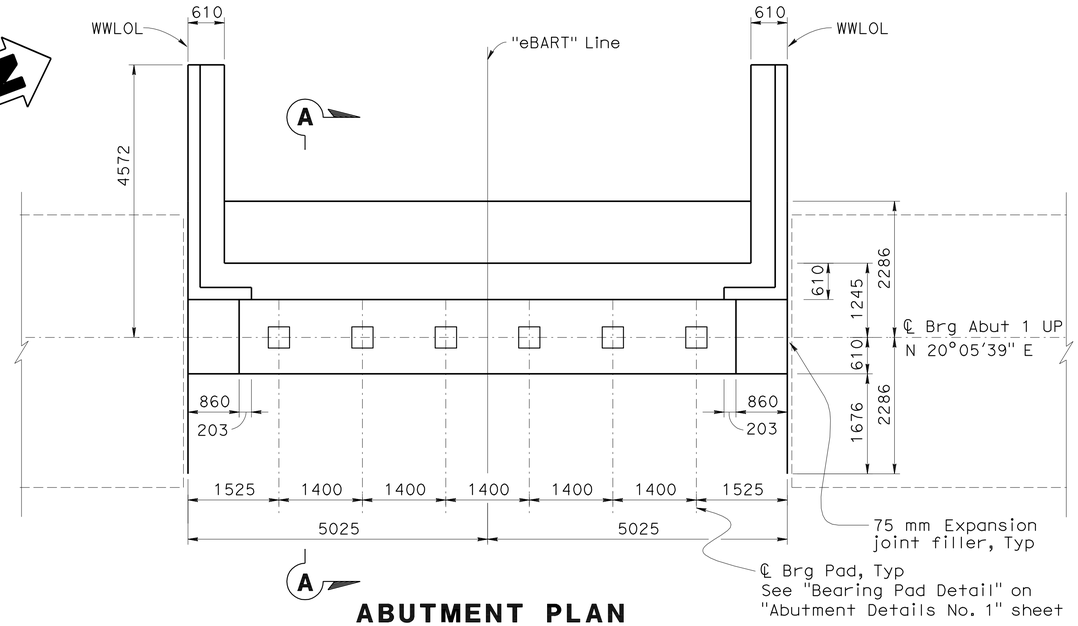

ABUTMENT PLAN

1:50

Legend:

⬚ Indicates vertical pile

Notes:

1. For "Section A-A", see "Abutment Details No. 1" sheet.
2. For Shear Key Details, see "Abutment Details No. 1" sheet.
3. For Wingwall Details, see "Abutment Details No. 2" sheet.
4. For Fractured Rib Texture, see "Century Blvd UC (Replace)" Plans
5. For Century Blvd. UC Abutment Details, see "Century Blvd UC (Replace)" Plans".
6. For Approach Slab Details, see "Abutment Details No. 3" sheet.

4 **REVISED PER ADDENDUM No. 4 DATED JANUARY 26, 2010**

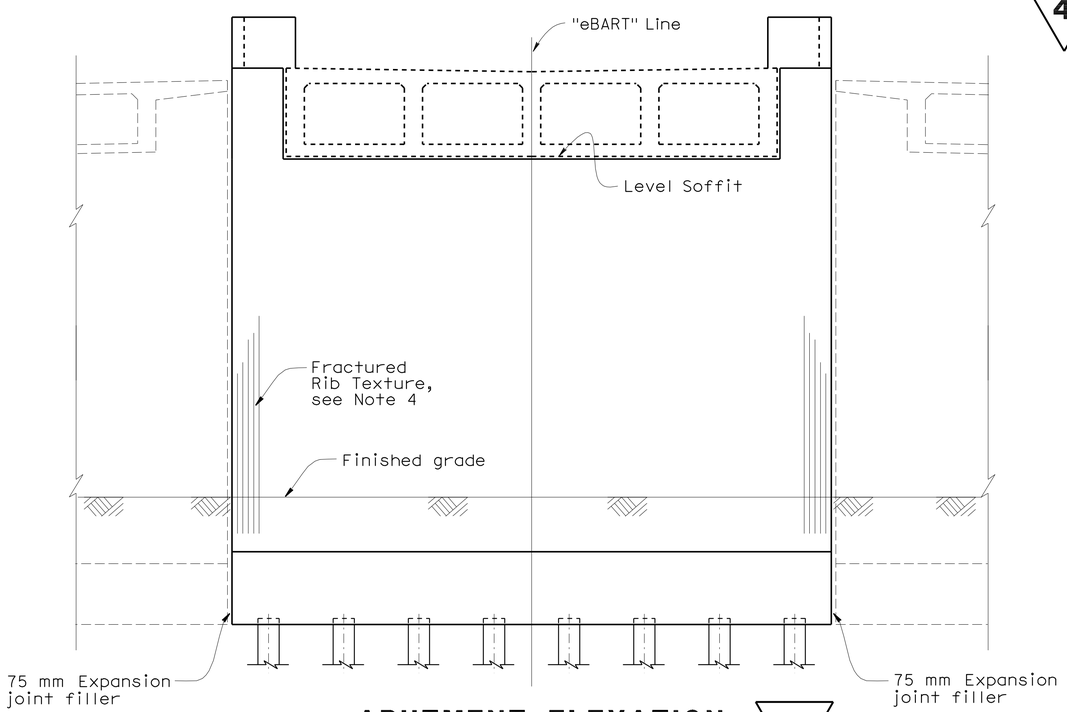

ABUTMENT ELEVATION

1:50

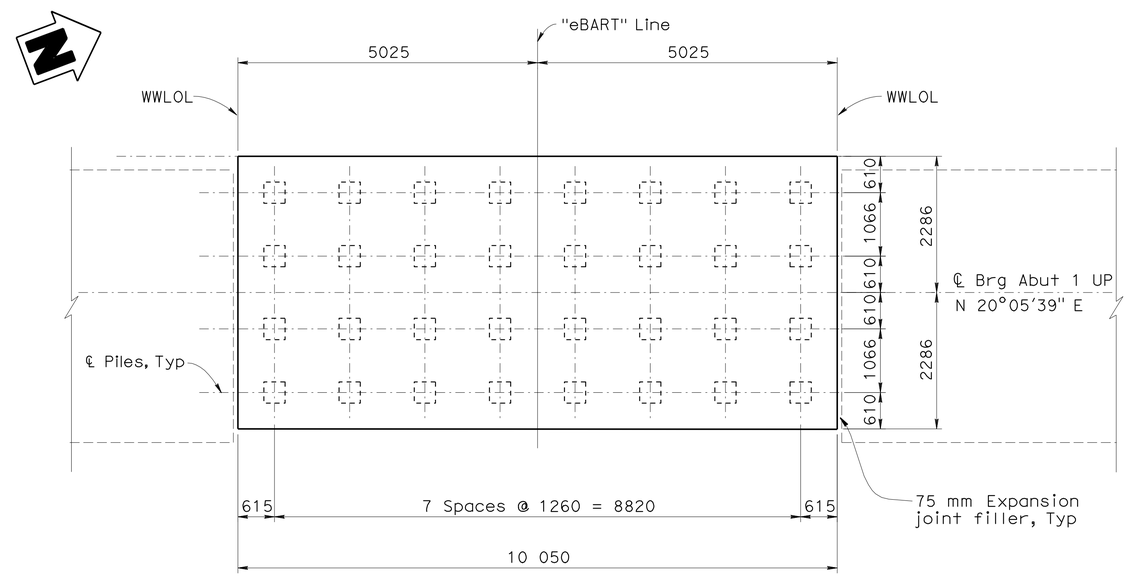

PILE LAYOUT

1:50

2 **REVISED PER ADDENDUM No. 2 DATED DECEMBER 30, 2009**

ALL DIMENSIONS ARE IN MILLIMETERS UNLESS OTHERWISE SHOWN

DESIGN OVERSIGHT — Emil A. Vergara Jr.
1-14-10
SIGN OFF DATE

	BY	CHECKED
DESIGN	T. Palmerino	B. Kattula / R. Hancock
DETAILS	E. Posadas	B. Kattula / R. Hancock
QUANTITIES	T. Palmerino	J. Melillo

PREPARED FOR THE STATE OF CALIFORNIA DEPARTMENT OF TRANSPORTATION

James C.S. Kwong
PROJECT ENGINEER

BRIDGE NO. 28C0484
KILOMETER POST 40.0(24.9)

eBART-CENTURY BLVD UP
ABUTMENT 1 LAYOUT

DESIGN DETAIL SHEET (METRIC) (REV. 10/27/05)

ORIGINAL SCALE IN MILLIMETERS FOR REDUCED PLANS 0 10 20 30 40 50 60 70 80 90 100

CU 04275
EA 228591

DISREGARD PRINTS BEARING EARLIER REVISION DATES → 12/17/07 02/15/08 04/29/08 07/18/08

REVISION DATES (PRELIMINARY STAGE ONLY)

SHEET 4 OF 10

FILE => 28C0484-f-a01_lo1.add

USERNAME => trrichy DATE PLOTTED => 21-JAN-2010 TIME PLOTTED => 16:05

DIST	COUNTY	ROUTE	KILOMETER POST TOTAL PROJECT	SHEET No	TOTAL SHEETS
04	CC	4	37.9/41.3	997	1086

REGISTERED CIVIL ENGINEER — 07/18/08 DATE

9-21-09
PLANS APPROVAL DATE

REGISTERED PROFESSIONAL ENGINEER — JAMES C. S. KWONG — No. C36732 — Exp. 06/30/10 — CIVIL — STATE OF CALIFORNIA

The State of California or its officers or agents shall not be responsible for the accuracy or completeness of electronic copies of this plan sheet.

CONTRA COSTA TRANSPORTATION AUTHORITY
3478 BUSKIRK AVENUE, SUITE 100
PLEASANT HILL, CA 94523

BEYAZ & PATEL, INC.
800 SOUTH BROADWAY, SUITE 200
WALNUT CREEK, CA 94596-5218

4 2 Caltrans Metric

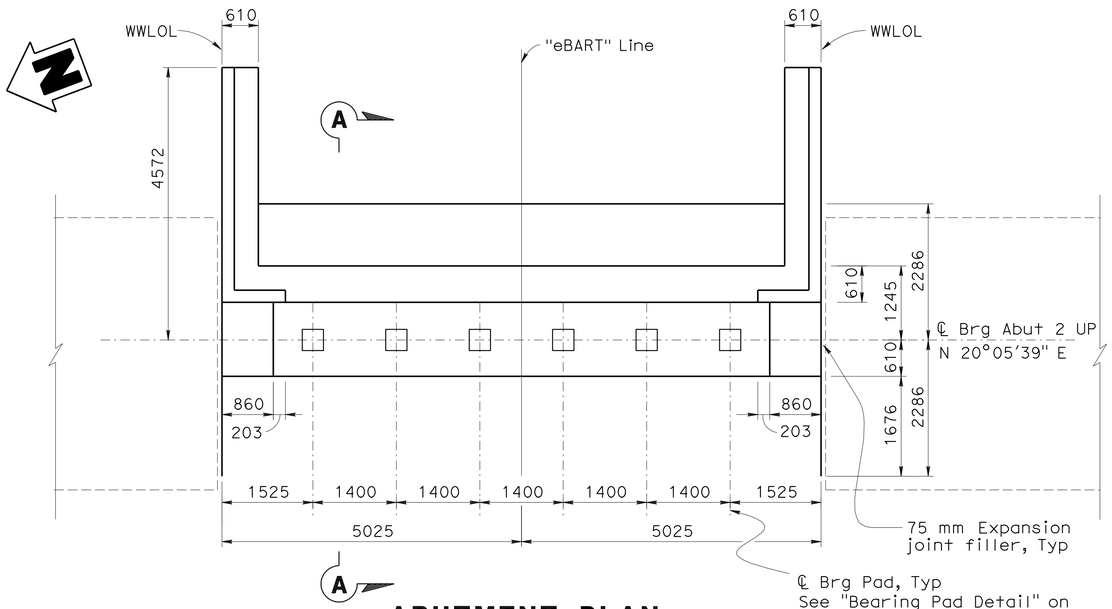

ABUTMENT PLAN

1:50

Legend:

⬚ Indicates vertical pile

Notes:

1. For "Section A-A", see "Abutment Details No. 1" sheet.
2. For Shear Key Details, see "Abutment Details No. 1" sheet.
3. For Wingwall Details, see "Abutment Details No. 2" sheet.
4. For Fractured Rib Texture, see "Century Blvd UC (Replace)" Plans
5. For Century Blvd. UC Abutment Details, see "Century Blvd UC (Replace)" Plans".
6. For Approach Slab Details, see "Abutment Details No. 3" sheet.

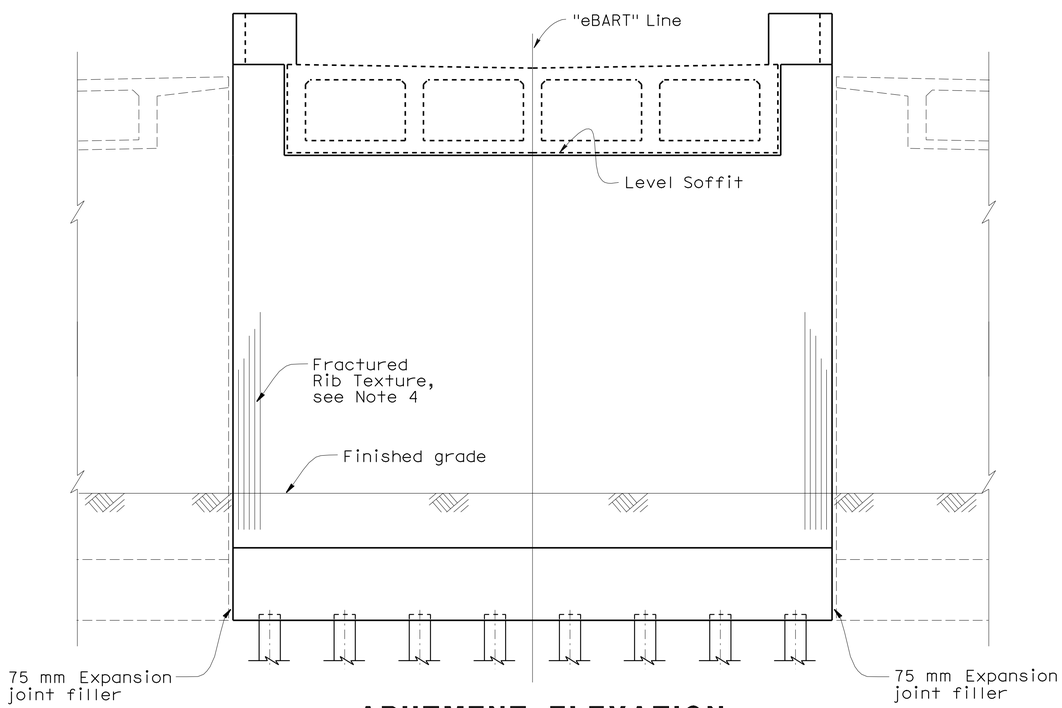

ABUTMENT ELEVATION

1:50

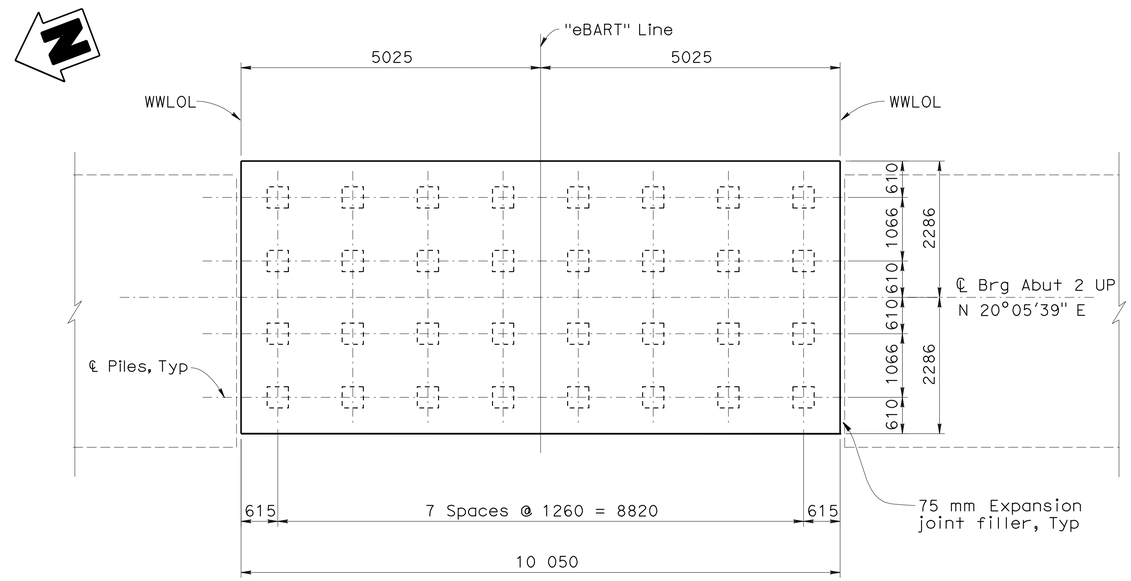

PILE LAYOUT

1:50

4 REVISED PER ADDENDUM No. 4 DATED JANUARY 26, 2010

2 REVISED PER ADDENDUM No. 2 DATED DECEMBER 30, 2009

ALL DIMENSIONS ARE IN MILLIMETERS UNLESS OTHERWISE SHOWN

DESIGN OVERSIGHT — Emil A. Vergara Jr. — 1-14-10 — SIGN OFF DATE

	BY	CHECKED
DESIGN	T. Palmerino	B. Kattula / R. Hancock
DETAILS	E. Posadas	B. Kattula / R. Hancock
QUANTITIES	T. Palmerino	J. Melillo

PREPARED FOR THE STATE OF CALIFORNIA DEPARTMENT OF TRANSPORTATION

James C.S. Kwong — PROJECT ENGINEER

BRIDGE NO. 28C0484 — KILOMETER POST 40.0(24.9)

eBART-CENTURY BLVD UP

ABUTMENT 2 LAYOUT

DESIGN DETAIL SHEET (METRIC) (REV. 10/27/05)

ORIGINAL SCALE IN MILLIMETERS FOR REDUCED PLANS 0 10 20 30 40 50 60 70 80 90 100

CU 04275
EA 228591

DISREGARD PRINTS BEARING EARLIER REVISION DATES

REVISION DATES (PRELIMINARY STAGE ONLY): 12/17/07 02/28/08 04/29/08 07/18/08

SHEET 5 OF 10

FILE => 28C0484-f-a01_1o2.add

USERNAME => trrichf DATE PLOTTED => 21-JAN-2010 TIME PLOTTED => 15:55

DIST	COUNTY	ROUTE	KILOMETER POST TOTAL PROJECT	SHEET No	TOTAL SHEETS
04	CC	4	37.9/41.3	998	1086

REGISTERED CIVIL ENGINEER 07/18/08 DATE

9-21-09
PLANS APPROVAL DATE

REGISTERED PROFESSIONAL ENGINEER JAMES C. S. KWONG No. C36732 Exp. 06/30/10 CIVIL STATE OF CALIFORNIA

The State of California or its officers or agents shall not be responsible for the accuracy or completeness of electronic copies of this plan sheet.

CONTRA COSTA TRANSPORTATION AUTHORITY
3478 BUSKIRK AVENUE, SUITE 100
PLEASANT HILL, CA 94523

BEYAZ & PATEL, INC.
800 SOUTH BROADWAY, SUITE 200
WALNUT CREEK, CA 94596-5218

Caltrans Metric

4 2

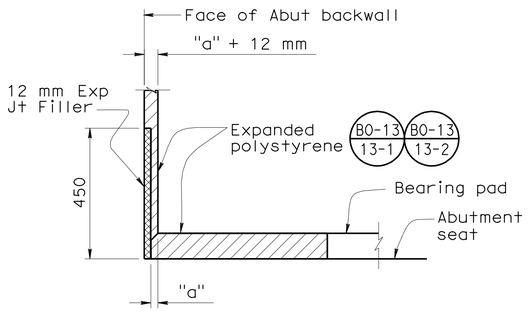

DETAIL A
NO SCALE

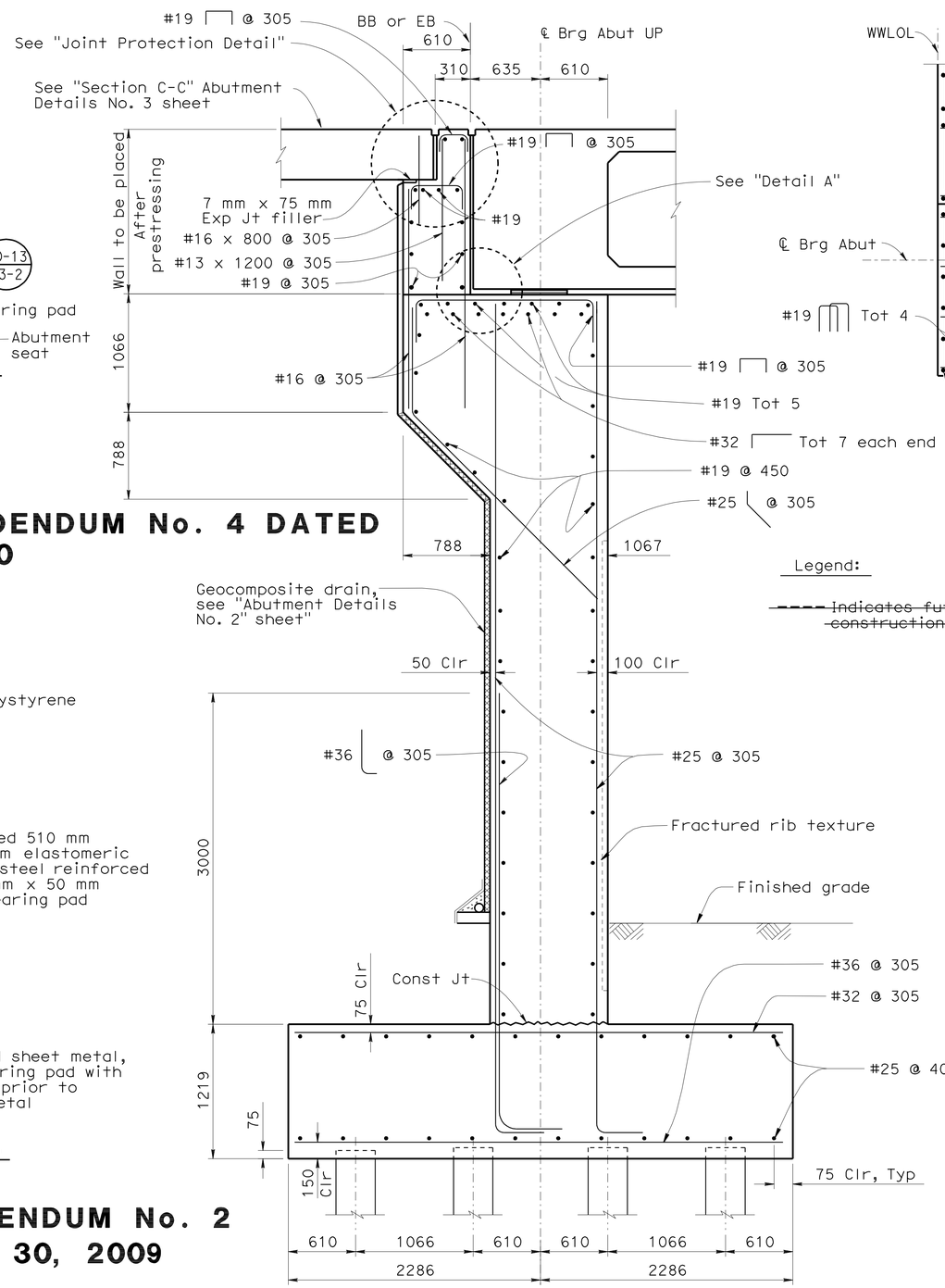

SECTION A-A
1:25

Legend:

~~----- Indicates future construction~~

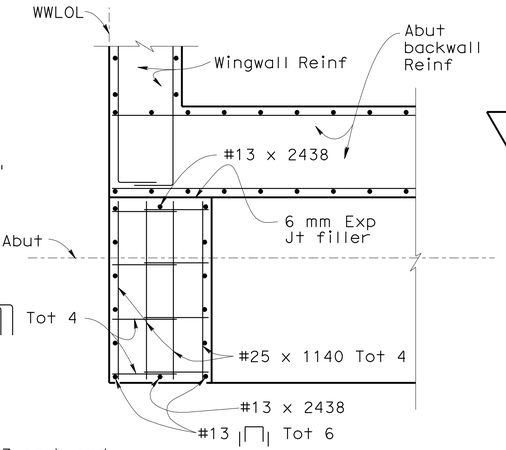

SECTION E-E
1:25

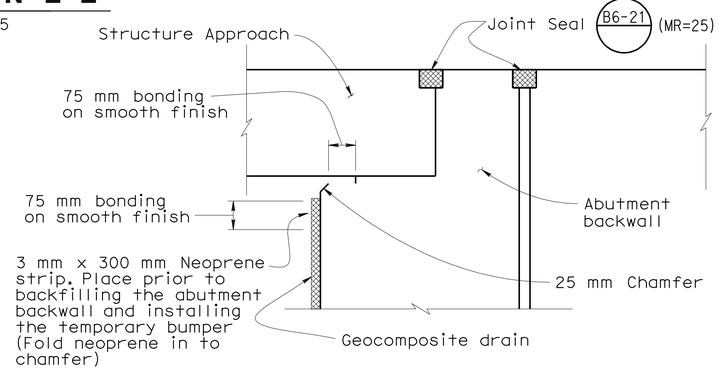

JOINT PROTECTION DETAIL
NO SCALE

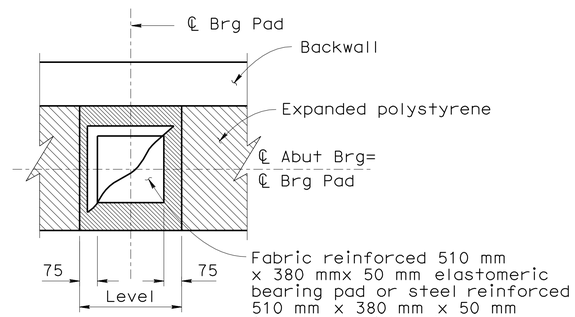

PLAN

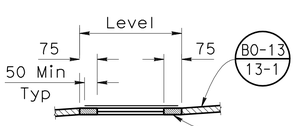

ELEVATION

BEARING PAD DETAIL
NO SCALE

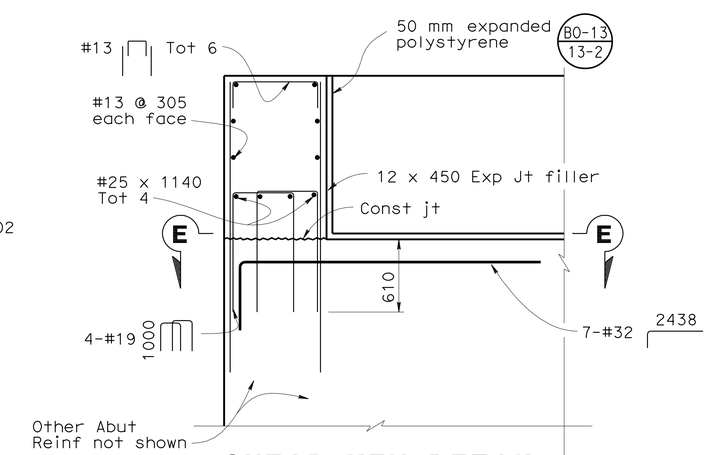

SHEAR KEY DETAIL
1:25

4 REVISED PER ADDENDUM No. 4 DATED JANUARY 26, 2010

2 REVISED PER ADDENDUM No. 2 DATED DECEMBER 30, 2009

ALL DIMENSIONS ARE IN MILLIMETERS UNLESS OTHERWISE SHOWN

DESIGN OVERSIGHT Emil A. Vergara Jr.
1-14-10
SIGN OFF DATE

	BY	CHECKED
DESIGN	T. Palmerino	B. Kattula / R. Hancock
DETAILS	E. Posadas	B. Kattula / R. Hancock
QUANTITIES	T. Palmerino	J. Melillo

PREPARED FOR THE STATE OF CALIFORNIA DEPARTMENT OF TRANSPORTATION

James C.S. Kwong
PROJECT ENGINEER

BRIDGE NO. 28C0484
KILOMETER POST 40.0(24.9)

eBART-CENTURY BLVD UP
ABUTMENT DETAILS NO. 1

DESIGN DETAIL SHEET (METRIC) (REV. 10/27/05)

ORIGINAL SCALE IN MILLIMETERS FOR REDUCED PLANS 0 10 20 30 40 50 60 70 80 90 100

CU 04275
EA 228591

DISREGARD PRINTS BEARING EARLIER REVISION DATES

REVISION DATES (PRELIMINARY STAGE ONLY) 12/17/07 02/15/08 04/29/08 07/18/08

SHEET 6 OF 10

FILE => 28C0484-f-a01dt01.add

USERNAME => friehard DATE PLOTTED => 21-JAN-2010 TIME PLOTTED => 14:37

DIST	COUNTY	ROUTE	KILOMETER POST TOTAL PROJECT	SHEET No	TOTAL SHEETS
04	CC	4	37.9/41.3	999	1086

REGISTERED CIVIL ENGINEER — 07/18/08 DATE

9-21-09
PLANS APPROVAL DATE

REGISTERED PROFESSIONAL ENGINEER — JAMES C. S. KWONG — No. C36732 — Exp. 06/30/10 — CIVIL — STATE OF CALIFORNIA

The State of California or its officers or agents shall not be responsible for the accuracy or completeness of electronic copies of this plan sheet.

CONTRA COSTA TRANSPORTATION AUTHORITY
3478 BUSKIRK AVENUE, SUITE 100
PLEASANT HILL, CA 94523

BEYAZ & PATEL, INC.
800 SOUTH BROADWAY, SUITE 200
WALNUT CREEK, CA 94596-5218

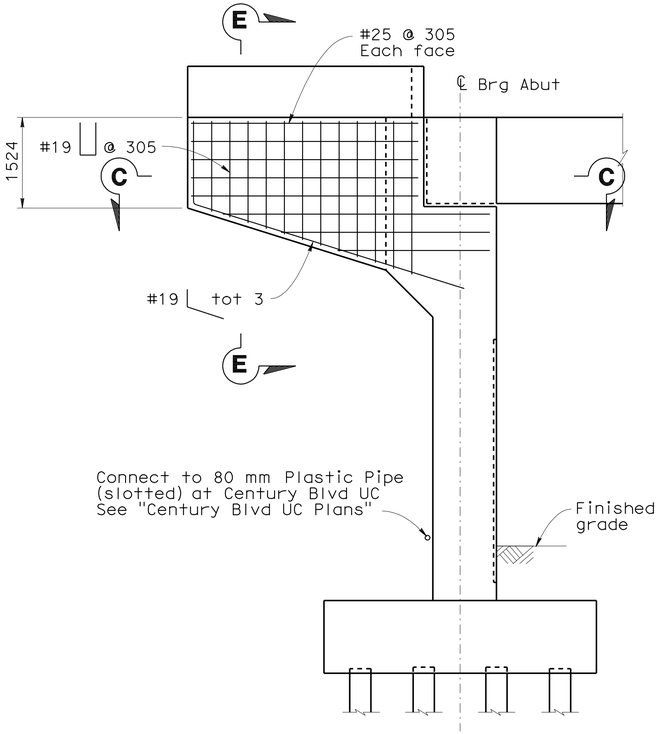

WINGWALL ELEVATION
1:50

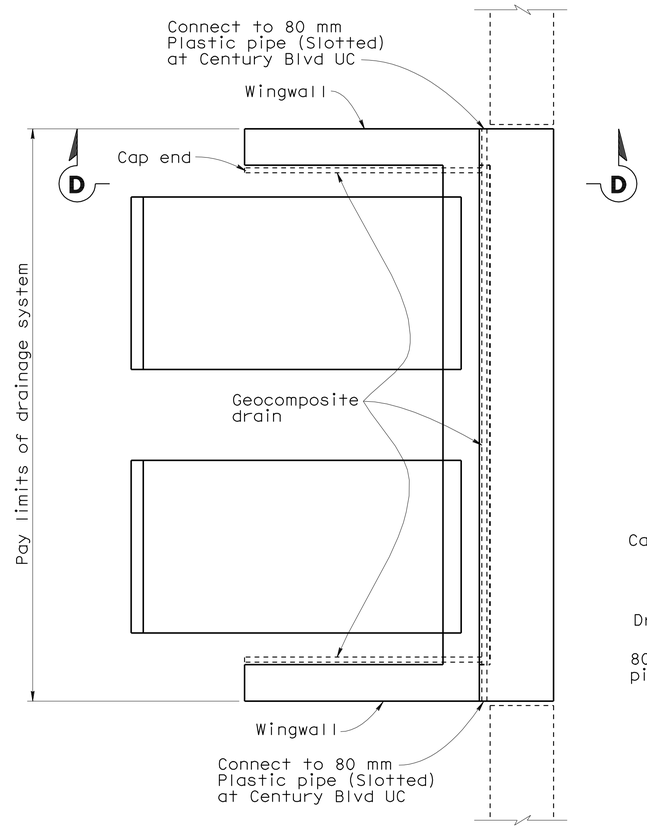

TYPICAL PLAN
1:50

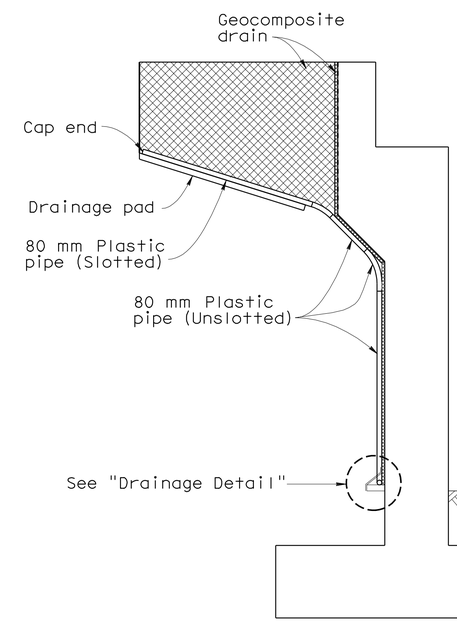

NOTE: Bends and junctions in 80 mm plastic pipe are 750 mm radius min.

DRAINAGE SYSTEM

SECTION D-D
1:50

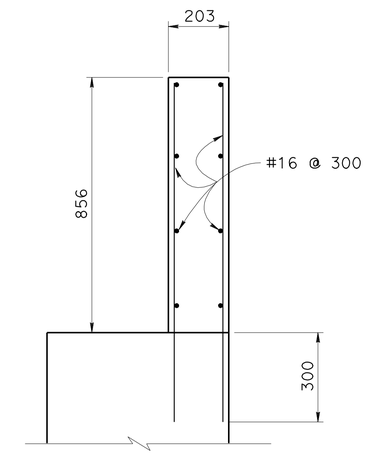

SECTION E-E
1:10

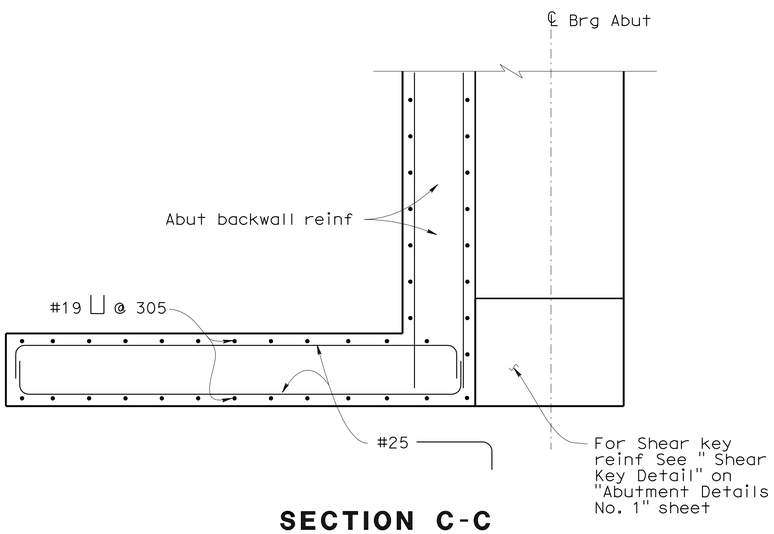

SECTION C-C
1:25

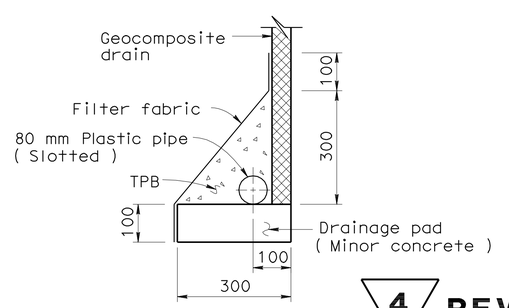

DRAINAGE DETAIL
No scale

4 REVISED PER ADDENDUM No. 4 DATED JANUARY 26, 2010

2 REVISED PER ADDENDUM No. 2 DATED DECEMBER 30, 2009

ALL DIMENSIONS ARE IN MILLIMETERS UNLESS OTHERWISE SHOWN

DESIGN OVERSIGHT — Emil A. Vergara Jr.
1-14-10
SIGN OFF DATE

	BY	CHECKED
DESIGN	T. Palmerino	B. Kattula / R. Hancock
DETAILS	E. Posadas	B. Kattula / R. Hancock
QUANTITIES	T. Palmerino	J. Melillo

PREPARED FOR THE STATE OF CALIFORNIA DEPARTMENT OF TRANSPORTATION

James C.S. Kwong
PROJECT ENGINEER

BRIDGE NO. 28C0484
KILOMETER POST 40.0(24.9)

eBART-CENTURY BLVD UP
ABUTMENT DETAILS NO. 2

DESIGN DETAIL SHEET (METRIC) (REV. 10/27/05)

ORIGINAL SCALE IN MILLIMETERS FOR REDUCED PLANS 0 10 20 30 40 50 60 70 80 90 100

CU 04275
EA 228591

DISREGARD PRINTS BEARING EARLIER REVISION DATES → 12/17/07 02/15/08 04/29/08 07/18/08

REVISION DATES (PRELIMINARY STAGE ONLY)

SHEET 7 OF 10

FILE => 28C0484-f-a01dt02.add

USERNAME => trienard DATE PLOTTED => 21-JAN-2010 TIME PLOTTED => 14:38

DIST	COUNTY	ROUTE	KILOMETER POST TOTAL PROJECT	SHEET No	TOTAL SHEETS
04	CC	4	37.9/41.3	999A	1086

4 2

Caltrans Metric

REGISTERED CIVIL ENGINEER 11/16/09 DATE

PLANS APPROVAL DATE

REGISTERED PROFESSIONAL ENGINEER JAMES C. S. KWONG No. C36732 Exp. 06/30/10 CIVIL STATE OF CALIFORNIA

The State of California or its officers or agents shall not be responsible for the accuracy or completeness of electronic copies of this plan sheet.

CONTRA COSTA TRANSPORTATION AUTHORITY
3478 BUSKIRK AVENUE, SUITE 100
PLEASANT HILL, CA 94523

BEYAZ & PATEL, INC.
800 SOUTH BROADWAY, SUITE 200
WALNUT CREEK, CA 94596-5218

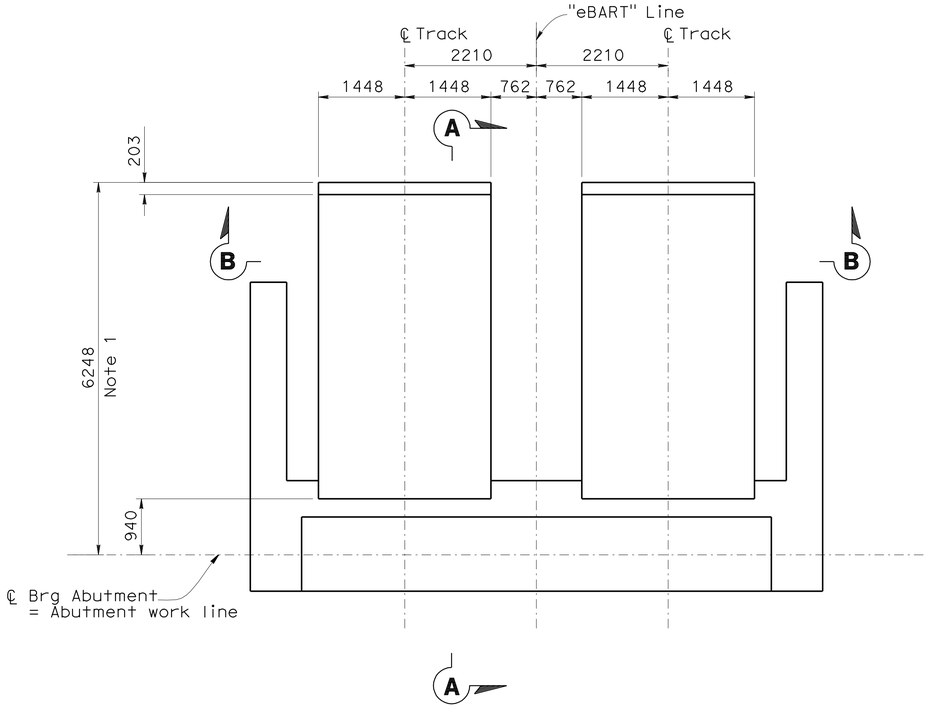

PLAN - APPROACH SLAB

1:50

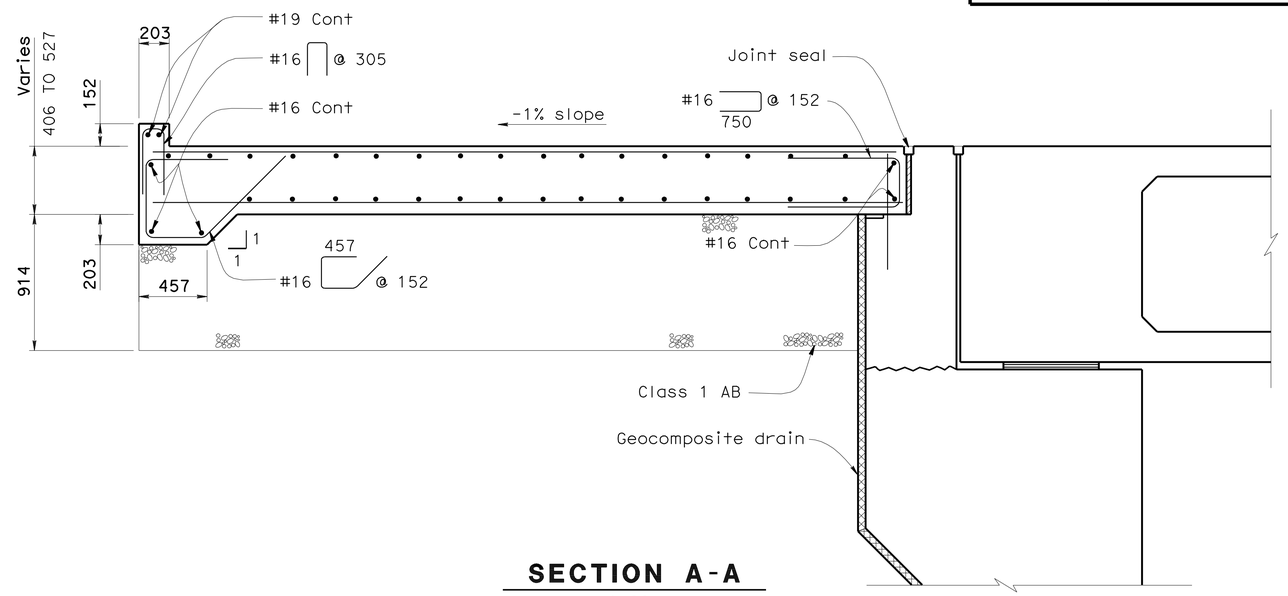

SECTION A-A

1:20

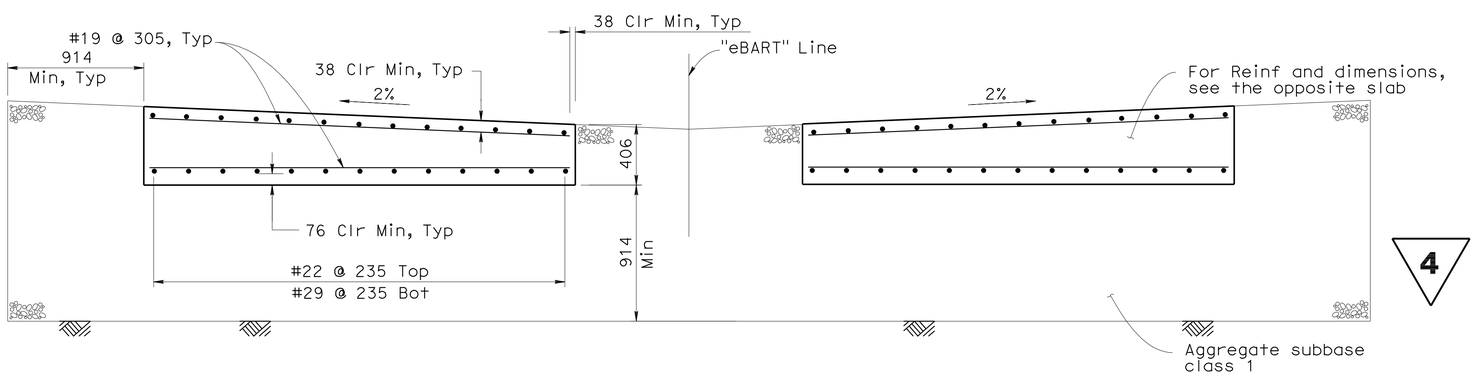

SECTION B-B

1:20

Notes:

1. The 6248 dimension is a distance between track station point at abutment and slab free end point centerline measured along centerline of track.
2. Ballast Wall and Barrier not shown for clarity.

4 **REVISED PER ADDENDUM No. 4 DATED JANUARY 26, 2010**

2 **ADDED PER ADDENDUM No. 2 DATED DECEMBER 30, 2009**

ALL DIMENSIONS ARE IN MILLIMETERS UNLESS OTHERWISE SHOWN

DESIGN OVERSIGHT Emil A. Vergara Jr.
1-14-10
SIGN OFF DATE

DESIGN	BY T. Palmerino	CHECKED B. Kattula / R. Hancock	
DETAILS	BY E. Posadas	CHECKED B. Kattula / R. Hancock	
QUANTITIES	BY T. Palmerino	CHECKED J. Melillo	

PREPARED FOR THE STATE OF CALIFORNIA DEPARTMENT OF TRANSPORTATION

James C.S. Kwong
PROJECT ENGINEER

BRIDGE NO. 28C0484
KILOMETER POST 40.0(24.9)

eBART-CENTURY BLVD UP
ABUTMENT DETAILS NO. 3

DESIGN DETAIL SHEET (METRIC) (REV. 10/27/05)

ORIGINAL SCALE IN MILLIMETERS FOR REDUCED PLANS 0 10 20 30 40 50 60 70 80 90 100

CU 04275
EA 228591

DISREGARD PRINTS BEARING EARLIER REVISION DATES

REVISION DATES (PRELIMINARY STAGE ONLY) 11/16/09

SHEET 7A OF 10

FILE => 28C0484-f-a01dt03.add

USERNAME => friemard DATE PLOTTED => 21-JAN-2010 TIME PLOTTED => 14:38

DIST	COUNTY	ROUTE	KILOMETER POST TOTAL PROJECT	SHEET No	TOTAL SHEETS
04	CC	4	37.9/41.3	999B	1086

REGISTERED CIVIL ENGINEER 11/16/09 DATE

PLANS APPROVAL DATE

REGISTERED PROFESSIONAL ENGINEER JAMES C. S. KWONG No. C36732 Exp. 06/30/10 CIVIL STATE OF CALIFORNIA

The State of California or its officers or agents shall not be responsible for the accuracy or completeness of electronic copies of this plan sheet.

CONTRA COSTA TRANSPORTATION AUTHORITY
3478 BUSKIRK AVENUE, SUITE 100
PLEASANT HILL, CA 94523

BEYAZ & PATEL, INC.
800 SOUTH BROADWAY, SUITE 200
WALNUT CREEK, CA 94596-5218

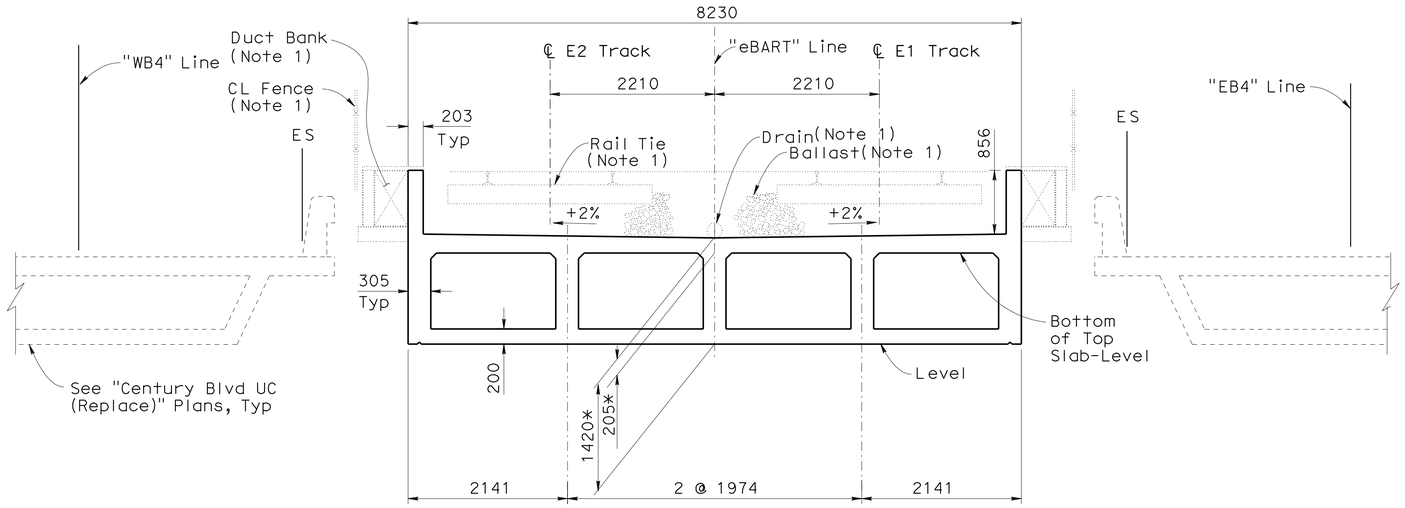

* Min & varies

eBART TRACKWAY

TYPICAL SECTION

1:40

Note:

1. The following items are not included in this Contract:

   -CL Fence
   -Duct Bank
   -Rail Tie and Rail
   -Ballast
   -Drain

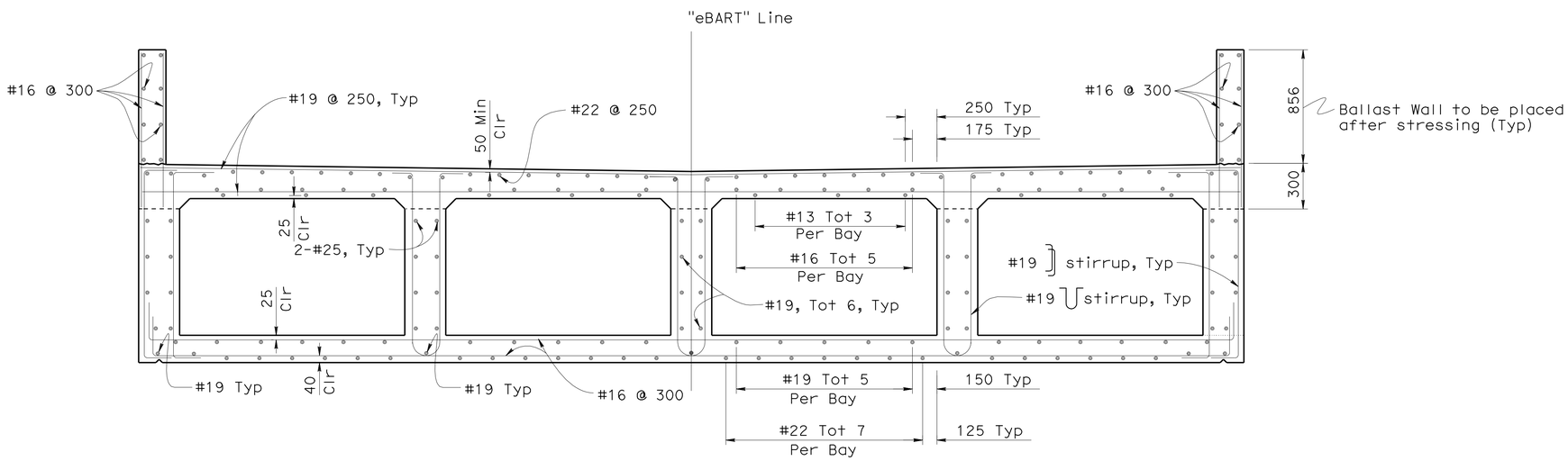

TYPICAL SECTION

1:20

B0-5 B7-1 B8-5

4 REVISED PER ADDENDUM No. 4 DATED JANUARY 26, 2010

2 ADDED PER ADDENDUM No. 2 DATED DECEMBER 30, 2009

ALL DIMENSIONS ARE IN MILLIMETERS UNLESS OTHERWISE SHOWN

DESIGN OVERSIGHT Emil A. Vergara Jr.
1-14-10
SIGN OFF DATE

	BY	CHECKED
DESIGN	W. Lau	B. Kattula / R. Hancock
DETAILS	E. Posadas	B. Kattula / R. Hancock
QUANTITIES	T. Palmerino	J. Melillo

PREPARED FOR THE STATE OF CALIFORNIA DEPARTMENT OF TRANSPORTATION

James C.S. Kwong
PROJECT ENGINEER

BRIDGE NO. 28C0484
KILOMETER POST 40.0(24.9)

eBART-CENTURY BLVD UP

TYPICAL SECTION

DESIGN DETAIL SHEET (METRIC) (REV. 10/27/05)

ORIGINAL SCALE IN MILLIMETERS FOR REDUCED PLANS 0 10 20 30 40 50 60 70 80 90 100

CU 04275
EA 228591

DISREGARD PRINTS BEARING EARLIER REVISION DATES

REVISION DATES (PRELIMINARY STAGE ONLY) 11/16/09

SHEET 7B OF 10

FILE => 28C0484-k-ts01.add

USERNAME => friemard DATE PLOTTED => 21-JAN-2010 TIME PLOTTED => 14:38

DIST	COUNTY	ROUTE	KILOMETER POST TOTAL PROJECT	SHEET No	TOTAL SHEETS
04	CC	4	37.9/41.3	999C	1086

REGISTERED CIVIL ENGINEER — DATE 11/16/09

PLANS APPROVAL DATE

REGISTERED PROFESSIONAL ENGINEER — JAMES C. S. KWONG — No. C36732 — Exp. 06/30/10 — CIVIL — STATE OF CALIFORNIA

The State of California or its officers or agents shall not be responsible for the accuracy or completeness of electronic copies of this plan sheet.

CONTRA COSTA TRANSPORTATION AUTHORITY
3478 BUSKIRK AVENUE, SUITE 100
PLEASANT HILL, CA 94523

BEYAZ & PATEL, INC.
800 SOUTH BROADWAY, SUITE 200
WALNUT CREEK, CA 94596-5218

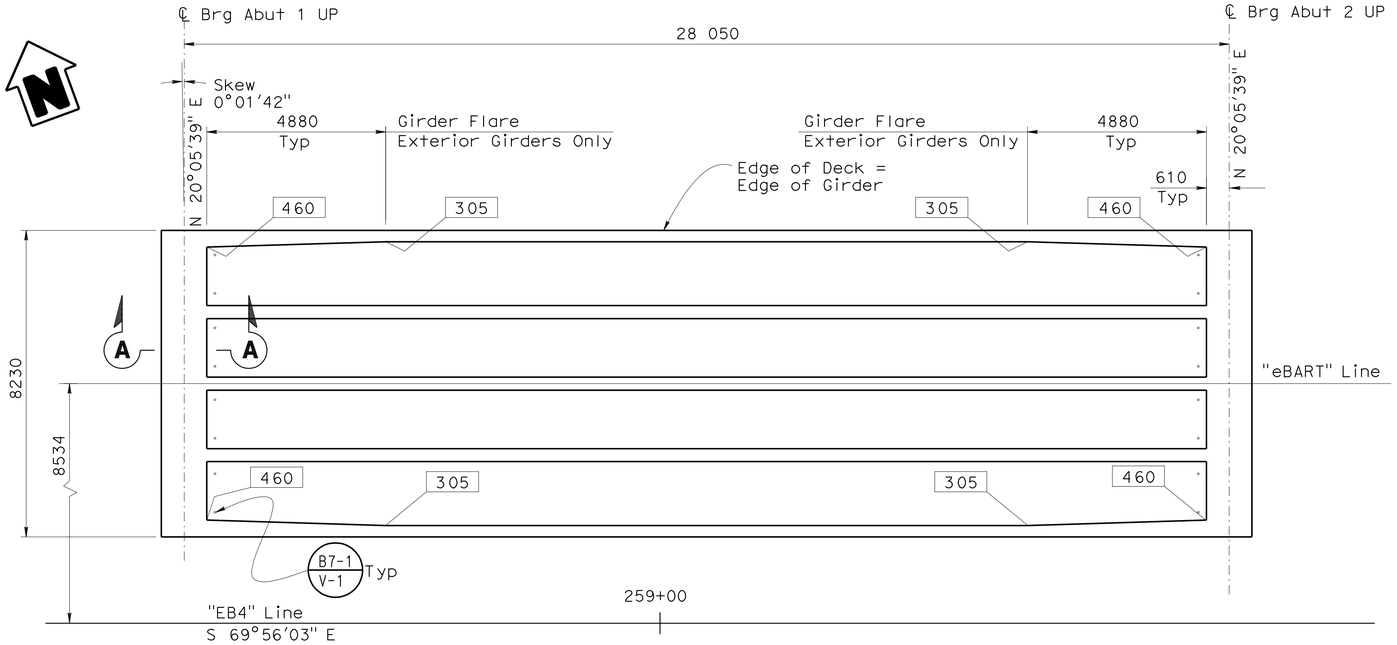

PLAN
1:80

PRESTRESSING NOTES

1860 MPa Low Relaxation Strand:

P_{jack} = 49600 kN

Anchor Set = 9.5 mm

Friction Curvature Coefficient, u = 0.15

Friction Wobble Coefficient, k = 6.6 x 10^{-7}/mm

Total Number of Girders = 5

Distribution of prestress force (Pjack) between girders shall not exceed the ratio of 3:2. Maximum final force variation between girders shall not exceed 3200 kN.

Concrete: f'_c = 43 MPa @ 28 days

f'_{ci} = 28 MPa @ time of stressing

Contractor shall submit elongation calculations based on initial stress at

⊠ = 0.949 times jacking stress.

One end stressing shall be performed from Abutment 1.

Legend:

Indicates Girder web thickness

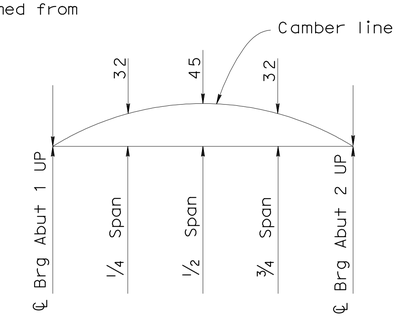

CAMBER DIAGRAM
No scale

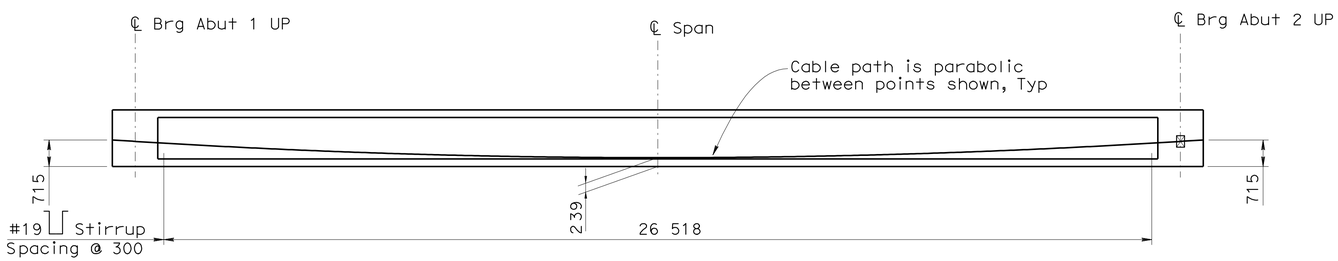

ELEVATION
1:80

B0-5 B7-1 B8-5

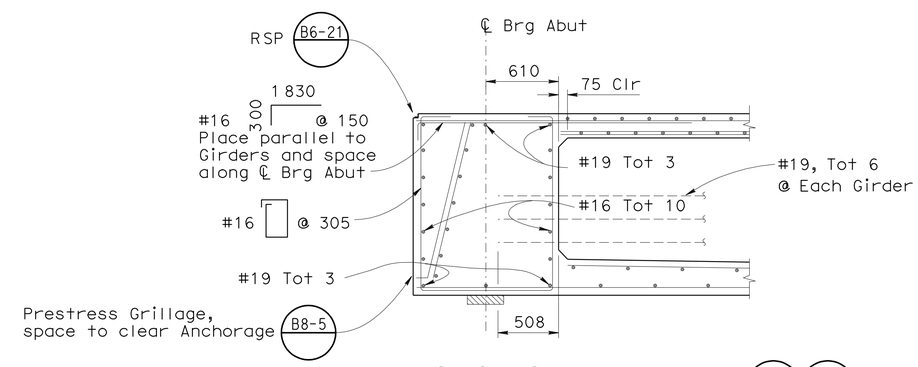

SECTION A-A
1:25

RSP B6-21 B8-5

4 REVISED PER ADDENDUM No. 4 DATED JANUARY 26, 2010

2 ADDED PER ADDENDUM No. 2 DATED DECEMBER 30, 2009

ALL DIMENSIONS ARE IN MILLIMETERS UNLESS OTHERWISE SHOWN

DESIGN OVERSIGHT — Emil A. Vergara Jr. — 1-14-10 — SIGN OFF DATE

	BY	CHECKED
DESIGN	W. Lau	B. Kattula / R. Hancock
DETAILS	E. Posadas	B. Kattula / R. Hancock
QUANTITIES	T. Palmerino	J. Melillo

PREPARED FOR THE STATE OF CALIFORNIA DEPARTMENT OF TRANSPORTATION

James C.S. Kwong — PROJECT ENGINEER

BRIDGE NO. 28C0484 — KILOMETER POST 40.0(24.9)

eBART-CENTURY BLVD UP
GIRDER LAYOUT

DESIGN DETAIL SHEET (METRIC) (REV. 10/27/05)

ORIGINAL SCALE IN MILLIMETERS FOR REDUCED PLANS 0 10 20 30 40 50 60 70 80 90 100

CU 04275
EA 228591

DISREGARD PRINTS BEARING EARLIER REVISION DATES — REVISION DATES (PRELIMINARY STAGE ONLY) 11/16/09

SHEET 7C OF 10

FILE => 28C0484-1-g_1o01.add

USERNAME => friehard DATE PLOTTED => 21-JAN-2010 TIME PLOTTED => 14:38

DIST	COUNTY	ROUTE	KILOMETER POST TOTAL PROJECT	SHEET No	TOTAL SHEETS
04	CC	4	37.9/41.3	1003	1086

REGISTERED CIVIL ENGINEER 07/18/08 DATE

9-21-09
PLANS APPROVAL DATE

REGISTERED PROFESSIONAL ENGINEER GEORGE K. LO No. C18434 Exp. 06/30/09 CIVIL STATE OF CALIFORNIA

The State of California or its officers or agents shall not be responsible for the accuracy or completeness of electronic copies of this plan sheet.

CONTRA COSTA TRANSPORTATION AUTHORITY
3478 BUSKIRK AVENUE, SUITE 100
PLEASANT HILL, CA 94523

BEYAZ & PATEL, INC.
800 SOUTH BROADWAY, SUITE 200
WALNUT CREEK, CA 94596-5218

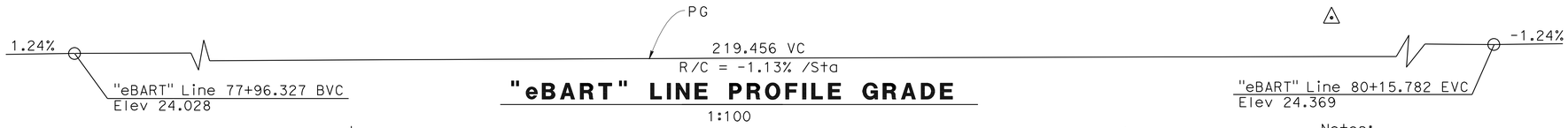

"eBART" LINE PROFILE GRADE

1:100

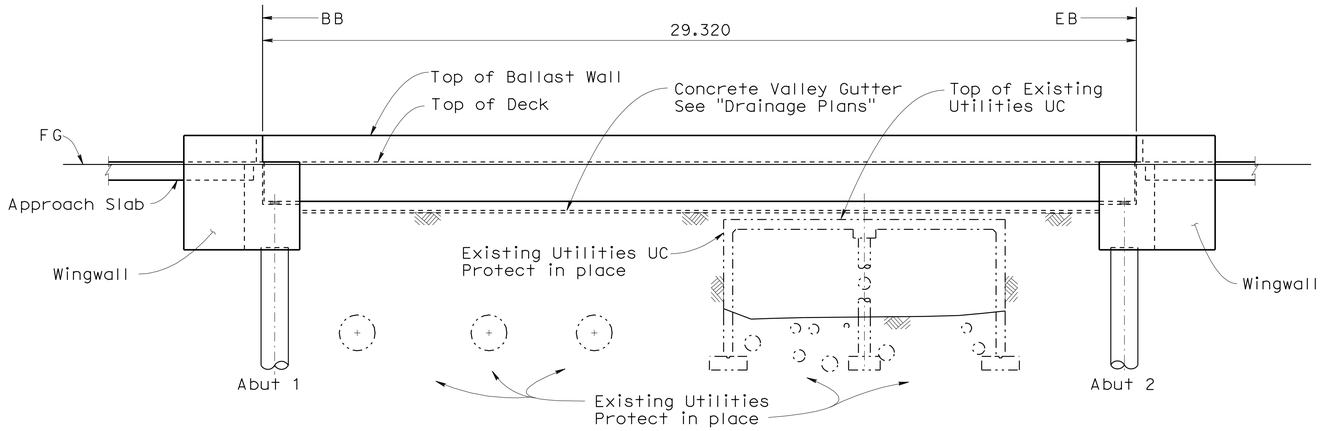

ELEVATION

1:100

Notes:

1. For "Sheet Index", "General Notes" and "Standard Plans" see "Index To Plans" sheet.
2. For "Pile Data Table" see "Foundation Plan" sheet.
3. For Existing Utilities, see "Foundation Plan" sheet.
4. ~~For requirements related to protection of Existing Utilites UC and Existing Utilities, see Special Provisions.~~

Legend:

(1) Paint Bridge No. 28X0483

(2) Paint Bridge Name and Year Completed

Denotes existing structure

Denotes direction of traffic

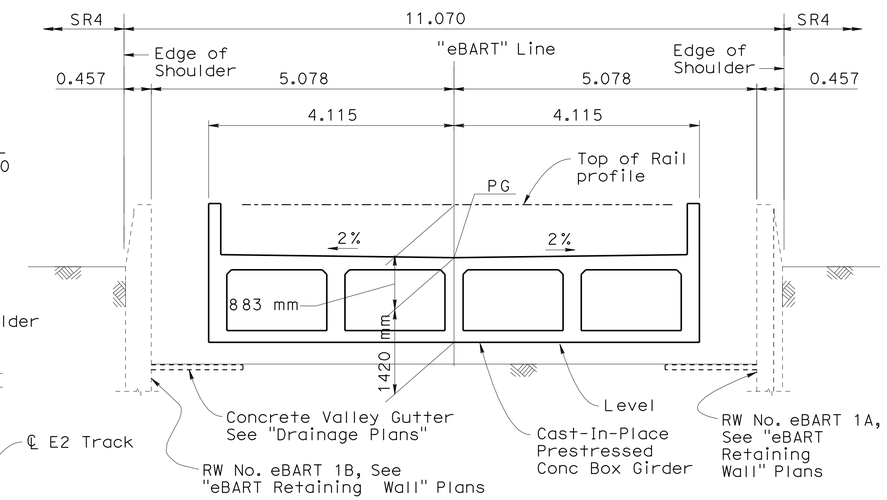

TYPICAL SECTION

1:50

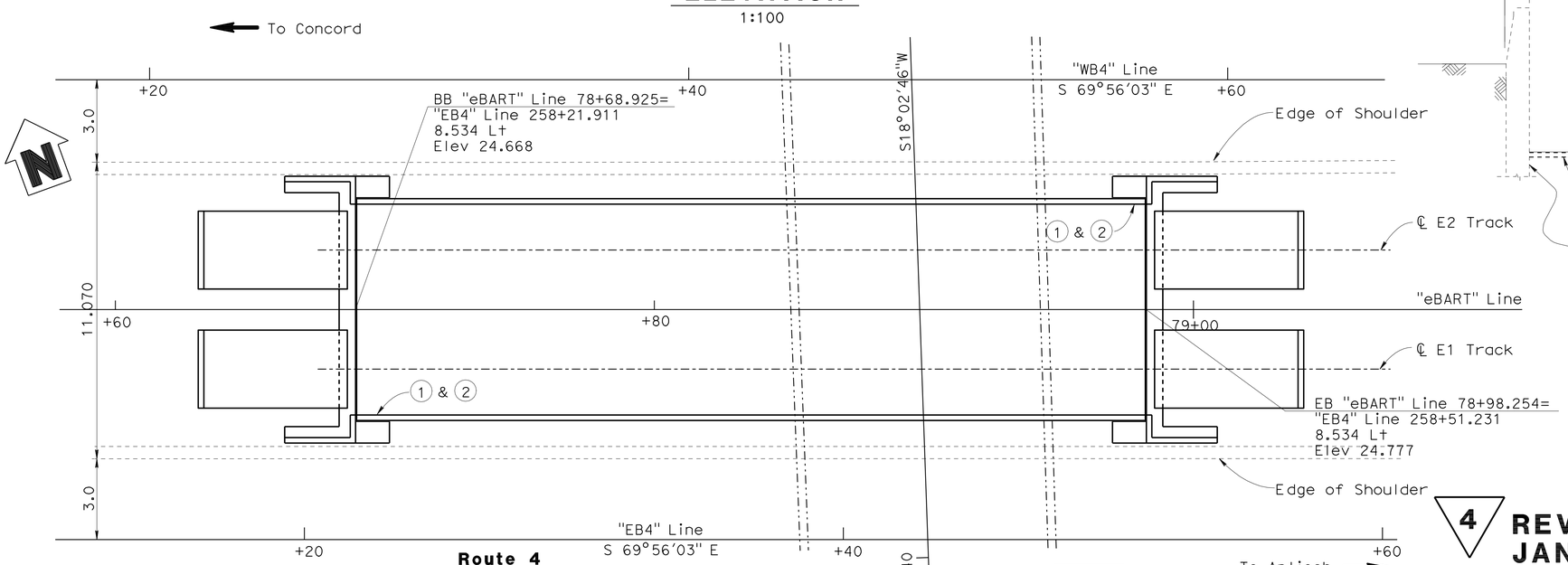

PLAN

1:100

QUANTITIES

JACKING SUPERSTRUCTURE (LOCATION A)	LUMP	SUM
STRUCTURE EXCAVATION (BRIDGE)	100	m^3
STRUCTURE BACKFILL (BRIDGE)	30	m^3
900 MM CAST-IN-DRILLED-HOLE CONCRETE PILING	211	m
PRESTRESSING CAST-IN-PLACE CONCRETE	LUMP	SUM
STRUCTURAL CONCRETE, BRIDGE FOOTING	56	m^3
STRUCTURAL CONCRETE, BRIDGE	225	m^3
STRUCTURAL CONCRETE, APPROACH SLAB	28	m^3
JOINT SEAL (MR 25 MM)	28	m
BAR REINFORCING STEEL (BRIDGE)	65 700	kg

Note:

THE CONTRACTOR SHALL VERIFY ALL CONTROLLING FIELD DIMENSIONS BEFORE ORDERING OR FABRICATING ANY MATERIAL.

4 **REVISED PER ADDENDUM No. 4 DATED JANUARY 26, 2010**

2 **REVISED PER ADDENDUM No. 2 DATED DECEMBER 30, 2009**

ALL DIMENSIONS ARE IN METERS UNLESS OTHERWISE SHOWN

DESIGN OVERSIGHT Emil A. Vergara Jr.	DESIGN	BY M. Hsiao	CHECKED B. Kattula / R. Hancock	LOAD FACTOR DESIGN	LIVE LOADING: HS25-44 AND 2-CAR DOUBLE DECK DMU TRAIN AND 10-CAR BART TRAIN LOADS		
1-14-10 SIGN OFF DATE	DETAILS	BY E. Posadas	CHECKED B. Kattula / R. Hancock	LAYOUT	BY M. Hsiao	CHECKED J. Kwong	
	QUANTITIES	BY T. Palmerino	CHECKED J. Melillo	SPECIFICATIONS	BY D. Harnagel	PLANS AND SPECS COMPARED T. Palmerino	

PREPARED FOR THE STATE OF CALIFORNIA DEPARTMENT OF TRANSPORTATION

George K. Lo
PROJECT ENGINEER

BRIDGE NO. 28X0483
KILOMETER POST 39.9(24.8)

eBART UTILITY CORRIDOR UP

GENERAL PLAN

DESIGN GENERAL PLAN SHEET (METRIC) (REV. 10/27/05)

ORIGINAL SCALE IN MILLIMETERS FOR REDUCED PLANS 0 10 20 30 40 50 60 70 80 90 100

CU 04275
EA 228591

DISREGARD PRINTS BEARING EARLIER REVISION DATES

REVISION DATES (PRELIMINARY STAGE ONLY) 12/17/07 02/15/08 04/29/08 07/18/08

SHEET 1 OF 15

FILE => 28X0483-a-gp01.dgn

USERNAME => ffrenard DATE PLOTTED => 21-JAN-2010 TIME PLOTTED => 14:38

DIST	COUNTY	ROUTE	KILOMETER POST TOTAL PROJECT	SHEET No	TOTAL SHEETS
04	CC	4	37.9/41.3	1004	1086

REGISTERED CIVIL ENGINEER 07/18/08 DATE

9-21-09
PLANS APPROVAL DATE

The State of California or its officers or agents shall not be responsible for the accuracy or completeness of electronic copies of this plan sheet.

REGISTERED PROFESSIONAL ENGINEER GEORGE K. LO No. C18434 Exp. 06/30/09 CIVIL STATE OF CALIFORNIA

CONTRA COSTA TRANSPORTATION AUTHORITY
3478 BUSKIRK AVENUE, SUITE 100
PLEASANT HILL, CA 94523

BEYAZ & PATEL, INC.
800 SOUTH BROADWAY, SUITE 200
WALNUT CREEK, CA 94596-5218

4 Caltrans Metric

GENERAL NOTES LOAD FACTOR DESIGN

DESIGN: BART Facilities Standard, version 1.2, released August 18, 2004 CALTRANS BRIDGE DESIGN SPECIFICATIONS - LFD Version April 2000 (1996 AASHTO with interims and revisions by CALTRANS).

SEISMIC DESIGN: BART Facilities Standards, Facility Design-Criteria, Structural-Seismic Design. Caltrans Seismic Design Criteria (SDC) version 1.4, June 2006.

LIVE LOADING: DMU -Colorado Rail Car, Double Deck 2-Car Train, AW3 loading BART - Standard BART train loading, minimum of 2 Cars to maximum of 10 cars.

SEISMIC LOADING: See ARS curve below

REINFORCED CONCRETE: fy = 420 Mpa, f'c = 28 Mpa, n = 8

PILES: See "Pile Data Table" on "Foundation Plan" sheet

PRESTRESSED CONCRETE: See "Prestressing Notes" on "Girder Layout" Sheet

INDEX TO PLANS

SHEET No.	TITLE
1	GENERAL PLAN
2	INDEX TO PLANS
3	DECK CONTOURS
4	FOUNDATION PLAN
5	ABUTMENT 1 LAYOUT
6	ABUTMENT 2 LAYOUT
7	ABUTMENT DETAILS No. 1
8	ABUTMENT DETAILS No. 2
9	ABUTMENT DETAILS No. 3
10	TYPICAL SECTION
11	GIRDER LAYOUT
12	LOG OF TEST BORING 1 OF 4
13	LOG OF TEST BORING 2 OF 4
14	LOG OF TEST BORING 3 OF 4
15	LOG OF TEST BORING 4 OF 4

ARS CURVE

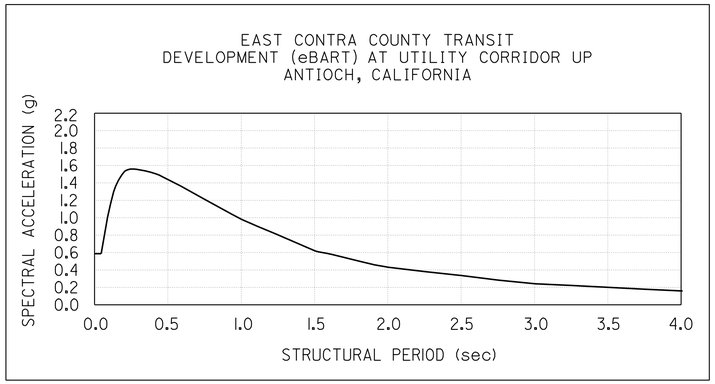

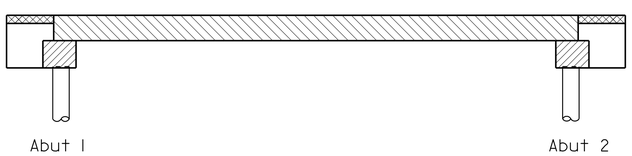

CONCRETE STRENGTH AND TYPE LIMITS

NO SCALE

- Structural Concrete, Bridge see "Girder Layout"
- Structural Concrete, Bridge Footing (28 MPa @ 28 days)
- Structural Concrete, Bridge (28 MPa @ 28 days)
- Structural Concrete, Structure Approach (28 MPa @ 28 days)

STANDARD PLANS DATED JULY 2004

A10A	ACRONYMS AND ABBREVIATIONS (A-L)
A10B	ACRONYMS AND ABBREVIATIONS (M-Z)
A10C	SYMBOLS (SHEET 1 OF 2)
A10D	SYMBOLS (SHEET 2 OF 2)
A85	CHAIN LINK FENCE
B0-5	BRIDGE DETAILS
B0-13	BRIDGE DETAILS
RSP B6-21	JOINT SEALS (MAXIMUM MOVEMENT RATING = 50 mm)
B7-1	BOX GIRDER DETAILS
RSP B8-5	CAST-IN-PLACE PRESTRESSED GIRDER DETAILS
B11-55	CONCRETE BARRIER TYPE 732
A62C	LIMITS OF PAYMENT FOR EXCAVATION AND BACKFILL, BRIDGE

Standard Plan Sheet No.
Detail No.
- Section Identification

CONSTRUCTION SEQUENCE (SUGGESTED)

1. Cast Superstucture in raised position above existing ground.
2. Stress and grout tendons.
3. Provide temporary lateral support. Install jacks and remove falsework.
4. Lower Superstucture to final position.
5. Remove jacks and cast the jacking recesses at Abutments.
6. Construct Shear Keys at Abutments.
7. Construct Abutment Backwall at Abutments.
8. Construct Ballast Walls.

NOTES FOR CONSTRUCTION SEQUENCE

1. Estimated Jacking Load (Service Design Loading)= 2040 kN per Abutment.
2. The estimated Jacking Load stated above is unfactored Superstucture Dead Load without Ballast Wall.
3. Structure to be lowered simultaneously at both Abutments.
4. Contractor shall submit for approval the design and shop drawings for the Lowering System.
5. Lowering System shall include a minimum of three (3) hydraulic jacks at each Abutment.
6. Size and location of jacking recesses at Abutments shall be determined by the Contractor and shall be subject to Engineer approval.

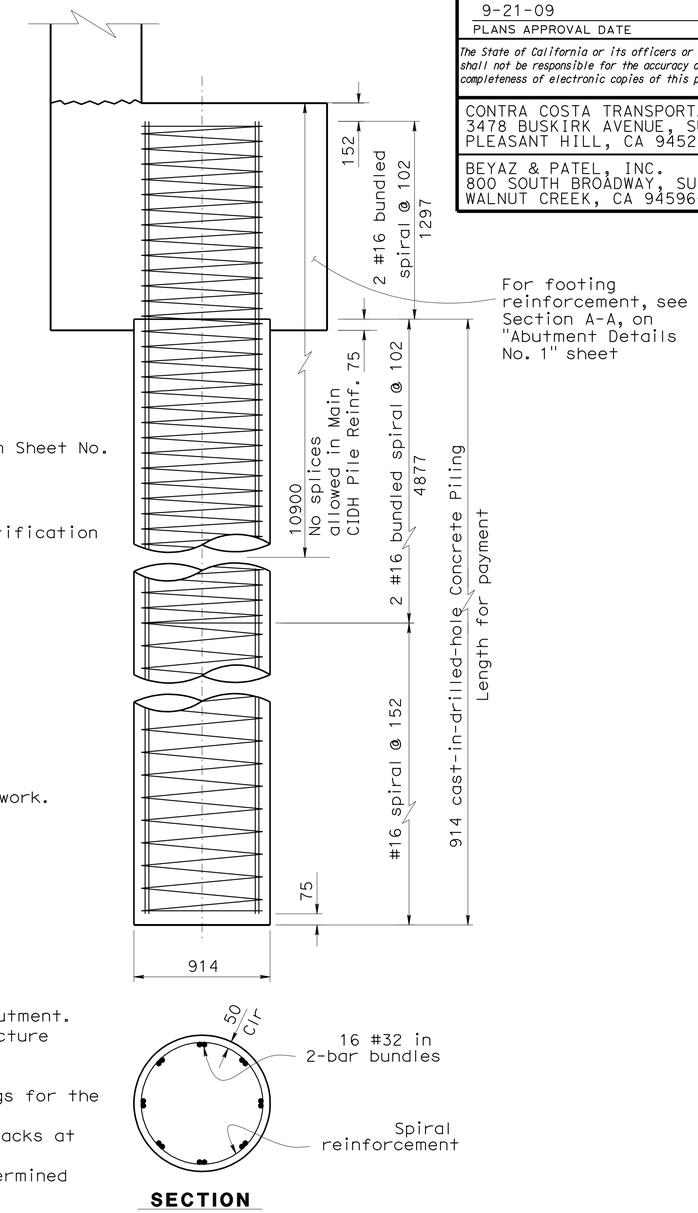

SECTION

914 mm CAST-IN-DRILLED-HOLE CONCRETE PILING

1:20

Note:
THE CONTRACTOR SHALL VERIFY ALL CONTROLLING FIELD DIMENSIONS BEFORE ORDERING OR FABRICATING ANY MATERIAL.

4 REVISED PER ADDENDUM No. 4 DATED JANUARY 26, 2010

ALL DIMENSIONS ARE IN MILLIMETERS UNLESS OTHERWISE SHOWN

DESIGN OVERSIGHT Emil A. Vergara Jr.
1-14-10
SIGN OFF DATE

	BY	CHECKED
DESIGN	M. Hsiao	B. Kattula / R. Hancock
DETAILS	E. Posadas	B. Kattula / R. Hancock
QUANTITIES	T. Palmerino	J. Melillo

PREPARED FOR THE STATE OF CALIFORNIA DEPARTMENT OF TRANSPORTATION

George K. Lo
PROJECT ENGINEER

BRIDGE NO. 28X0483
KILOMETER POST 39.9(24.8)

eBART UTILITY CORRIDOR UP
INDEX TO PLANS

DESIGN DETAIL SHEET (METRIC) (REV. 10/27/05)

ORIGINAL SCALE IN MILLIMETERS FOR REDUCED PLANS 0 10 20 30 40 50 60 70 80 90 100

CU 04275
EA 228591

DISREGARD PRINTS BEARING EARLIER REVISION DATES

REVISION DATES (PRELIMINARY STAGE ONLY) 12/17/07 02/15/08 04/29/08 07/18/08

SHEET 2 OF 15

FILE => 28X0483-a-itp.dgn

USERNAME => friemard DATE PLOTTED => 21-JAN-2010 TIME PLOTTED => 14:38

DIST	COUNTY	ROUTE	KILOMETER POST TOTAL PROJECT	SHEET No	TOTAL SHEETS
04	CC	4	37.9/41.3	1005	1086

REGISTERED CIVIL ENGINEER 07/18/08 DATE

9-21-09
PLANS APPROVAL DATE

REGISTERED PROFESSIONAL ENGINEER
GEORGE K. LO
No. C18434
Exp. 06/30/09
CIVIL
STATE OF CALIFORNIA

The State of California or its officers or agents shall not be responsible for the accuracy or completeness of electronic copies of this plan sheet.

CONTRA COSTA TRANSPORTATION AUTHORITY
3478 BUSKIRK AVENUE, SUITE 100
PLEASANT HILL, CA 94523

BEYAZ & PATEL, INC.
800 SOUTH BROADWAY, SUITE 200
WALNUT CREEK, CA 94596-5218

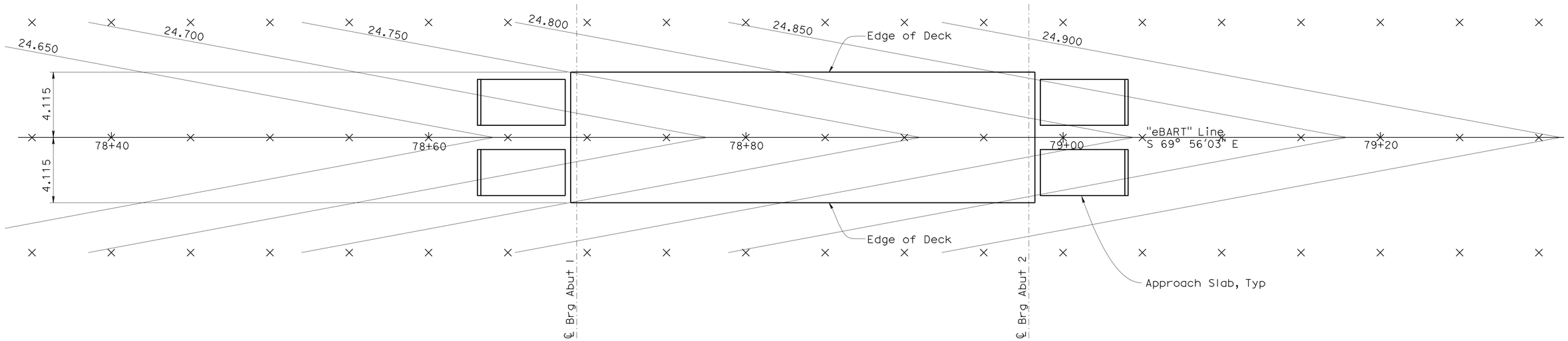

PLAN
1:125

Notes:

1. Contours do not include Camber
2. Contour interval = 0.05 m

Legend:

× Indicates 5 m interval measured along "eBART" Line

Note:
THE CONTRACTOR SHALL VERIFY ALL CONTROLLING FIELD DIMENSIONS BEFORE ORDERING OR FABRICATING ANY MATERIAL.

4 REVISED PER ADDENDUM No. 4 DATED JANUARY 26, 2010

ALL DIMENSIONS ARE IN METERS UNLESS OTHERWISE SHOWN

DESIGN OVERSIGHT Emil A. Vergara Jr.
1-14-10
SIGN OFF DATE

	BY	CHECKED
DESIGN	T. Palmerino	B. Kattula / R. Hancock
DETAILS	E. Posadas	B. Kattula / R. Hancock
QUANTITIES	T. Palmerino	J. Melillo

PREPARED FOR THE STATE OF CALIFORNIA DEPARTMENT OF TRANSPORTATION

George K. Lo
PROJECT ENGINEER

BRIDGE NO. 28X0483
KILOMETER POST 39.9(24.8)

eBART UTILITY CORRIDOR UP
DECK CONTOURS

DESIGN DETAIL SHEET (METRIC) (REV. 10/27/05)

ORIGINAL SCALE IN MILLIMETERS FOR REDUCED PLANS 0 10 20 30 40 50 60 70 80 90 100

CU 04275
EA 228591

DISREGARD PRINTS BEARING EARLIER REVISION DATES

REVISION DATES (PRELIMINARY STAGE ONLY): 12/17/07 02/15/08 04/29/08 07/18/08

SHEET 3 OF 15

FILE => 28X0483-d-dc01.dwg

USERNAME => trienard DATE PLOTTED => 21-JAN-2010 TIME PLOTTED => 14:39

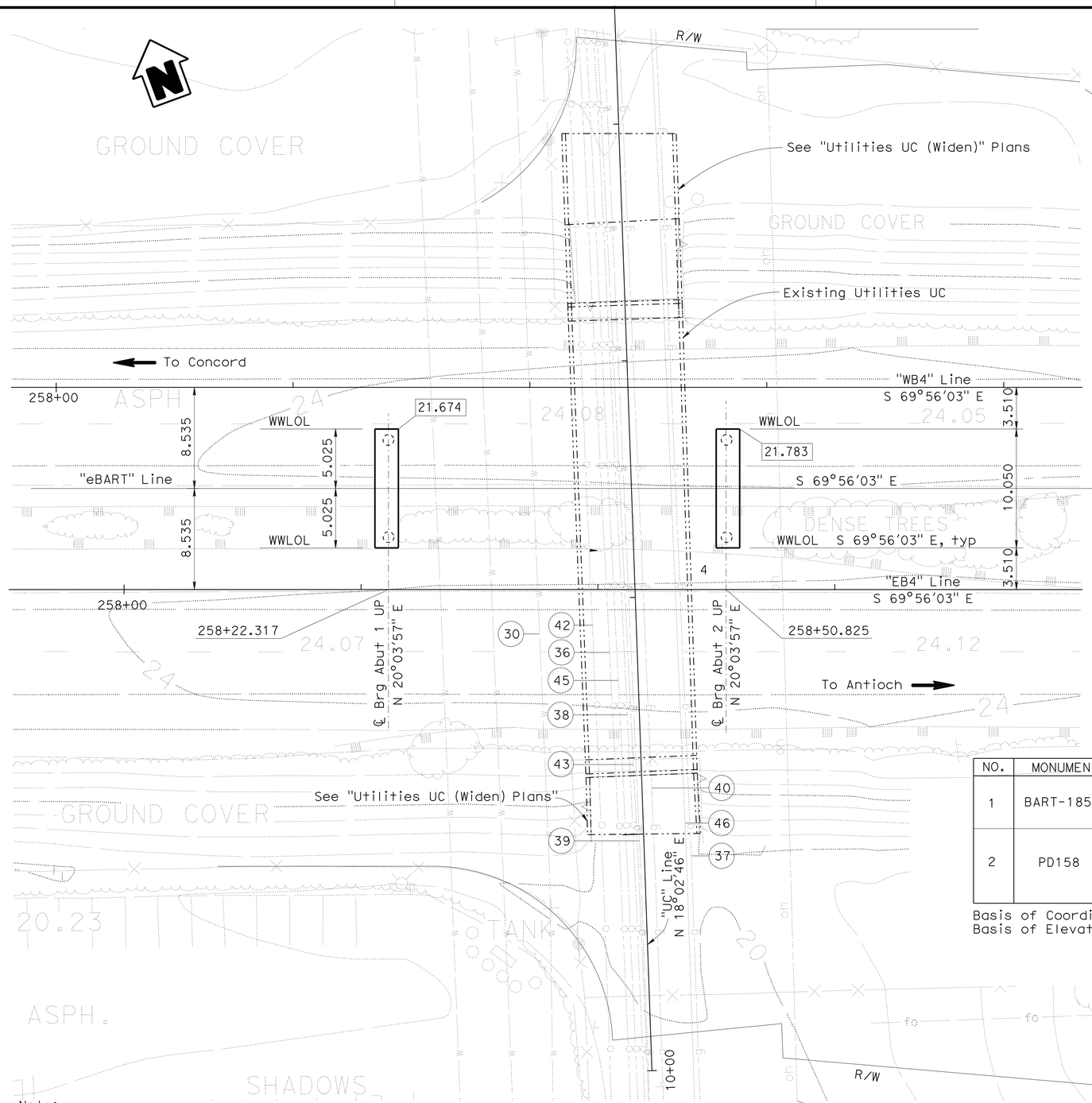

Note:

THE CONTRACTOR SHALL VERIFY ALL CONTROLLING FIELD DIMENSIONS BEFORE ORDERING OR FABRICATING ANY MATERIAL.

PLAN

1:200

Legend:

- Denotes existing structure
- Denotes direction of traffic
- XX.XXX Denotes bottom of footing elevation

Notes:

1. All piles not shown for clarity.
2. Utilities in conflict with footings will be removed or relocated prior to bridge construction by others.
3. For pile locations see "Abutment 1 Layout" and "Abutment 2 Layout" sheets.
4. For pile details, see "Index to Plans" sheet.
5. Utilities shown are approximate. For utility details, see "Road Plans".

Caltrans Metric

4

DIST	COUNTY	ROUTE	KILOMETER POST TOTAL PROJECT	SHEET No	TOTAL
04	CC	4	37.9/41.3	1006	1086

REGISTERED CIVIL ENGINEER 07/18/08 DATE

9-21-09
PLANS APPROVAL DATE

REGISTERED PROFESSIONAL ENGINEER GEORGE K. LO No. C18434 Exp. 06/30/09 CIVIL STATE OF CALIFORNIA

The State of California or its officers or agents shall not be responsible for the accuracy or completeness of electronic copies of this plan sheet.

CONTRA COSTA TRANSPORTATION AUTHORITY
3478 BUSKIRK AVENUE, SUITE 100
PLEASANT HILL, CA 94523

BEYAZ & PATEL, INC.
800 SOUTH BROADWAY, SUITE 200
WALNUT CREEK, CA 94596-5218

EXISTING UTILITIES

Utility No.	Disposition	Type and Size	Owner
30	Protect in place	305 mm Water	UNKNOWN
36	Protect in Place	150 mm Oil (Idle)	Chevron
37	Protect in Place	250 mm Gas in 450 mm Casing	Calpine
38	Protect in Place	200 mm Oil (Idle)	Chevron
39	Protect in Place	50 mm Water	Chevron
40	Protect in Place	300 mm Gas	Conoco Philips
41	Not Used		
42	Protect in Place	300 mm Oil	Chevron
43	Protect in Place	300 mm Gas	Chevron *
44	Not Used		
45	Protect in Place	250 mm Oil (Idle)	Chevron *
46	Protect in Place	100 mm Oil Unknown	Shell

All utilities shown in these plans are based upon record information obtained from utility owners, and/or field surveys of existing uitility. Contractor shall verify the locations of utilities prior to start of construction.

* Location of Utility shown is based on record drawings. Utility not located during potholing operation.

CONSTRUCTION CONTROL SURVEY DATA

NO.	MONUMENT	NORTHING	EASTING	ELEV	DESCRIPTION AND LOCATION
1	BART-185	668761.205	1879751.308	16.434	3.5" DIA BRASS DISC AT NORTHWEST QUADRANT OF LOVERIDGE/ROUTE 4 INTERCHANGE STAMPED "BART CONTROL NO. 185" DISC LIES 26.737m LEFT OF STA 245+68.164 "WB4" LINE
2	PD158	668267.967	1880990.806	18.260	8" SPIKE 2.1m WESTERLY OF THE WESTERLY EDGE OF CENTURY BLVD UC @ CC4. 7.43m SOUTH OF ANGLE POINT IN THE CHAINLINK FENCE AT THE BOTTOM OF THE SOUTHWESTERLY WINGWALL OF CENTURY BLVD UC, 4.1m SOUTH OF THE CHAINLINK FENCE.

Basis of Coordinates: NAD 83, CCS Zone 3 EPOCH 1991.35
Basis of Elevations: NGVD29 1929

PILE DATA TABLE

Location	Pile Type	Design Load (kN)	Nominal Resistance (kN)		Design Tip Elevation* (m)	Specified Tip Elev (m)
			Compression	Tension		
Abut 1	914 mm CIDH	N/A	4200	0	-4.7 (1); 5.0 (2)	-4.7
Abut 2	914 mm CIDH	N/A	4200	0	-4.7 (1); 5.0 (2)	-4.7

* Design tip elevation is controlled by the following demands:
(1) Compression; (2) Lateral loads

4 **REVISED PER ADDENDUM No. 4 DATED JANUARY 26, 2010**

ALL DIMENSIONS ARE IN METERS UNLESS OTHERWISE SHOWN

GEOTECHNICAL PROFESSIONAL APPROVAL DATE 07/18/08

DESIGN OVERSIGHT Emil A. Vergara Jr. 1-14-10 SIGN OFF DATE

SCALE:	VERT.DATUM NGVD 29	HORZ.DATUM NAD 83
PHOTOGRAMMETRY AS OF: 5/23/05	ALIGNMENT TIES	
SURVEYED BY B. Shives	DRAFTED BY	
FIELD CHECKED BY AJ Burgess	CHECKED BY	

	BY	CHECKED
DESIGN	T. Palmerino	B. Kattula / R. Hancock
DETAILS	E. Posadas	B. Kattula / R. Hancock
QUANTITIES	T. Palmerino	J. Melillo

PREPARED FOR THE STATE OF CALIFORNIA DEPARTMENT OF TRANSPORTATION

George K. Lo
PROJECT ENGINEER

BRIDGE NO. 28X0483
KILOMETER POST 39.9(24.8)

eBART UTILITY CORRIDOR UP
FOUNDATION PLAN

FOUNDATION PLAN SHEET (METRIC) (REV. 10/27/05)

ORIGINAL SCALE IN MILLIMETERS FOR REDUCED PLANS 0 10 20 30 40 50 60 70 80 90 100

CU 04275
EA 228591

DISREGARD PRINTS BEARING EARLIER REVISION DATES

REVISION DATES (PRELIMINARY STAGE ONLY) 12/17/07 02/13/08 04/29/08 07/18/08

SHEET 4 OF 15

FILE => 28X0483-e-fdp101.add

USERNAME => trienard DATE PLOTTED => 21-JAN-2010 TIME PLOTTED => 14:39

DIST	COUNTY	ROUTE	KILOMETER POST TOTAL PROJECT	SHEET No	TOTAL SHEETS
04	CC	4	37.9/41.3	1007	1086

REGISTERED CIVIL ENGINEER 07/18/08 DATE

9-21-09
PLANS APPROVAL DATE

REGISTERED PROFESSIONAL ENGINEER GEORGE K. LO No. C18434 Exp. 06/30/09 CIVIL STATE OF CALIFORNIA

The State of California or its officers or agents shall not be responsible for the accuracy or completeness of electronic copies of this plan sheet.

CONTRA COSTA TRANSPORTATION AUTHORITY
3478 BUSKIRK AVENUE, SUITE 100
PLEASANT HILL, CA 94523

BEYAZ & PATEL, INC.
800 SOUTH BROADWAY, SUITE 200
WALNUT CREEK, CA 94596-5218

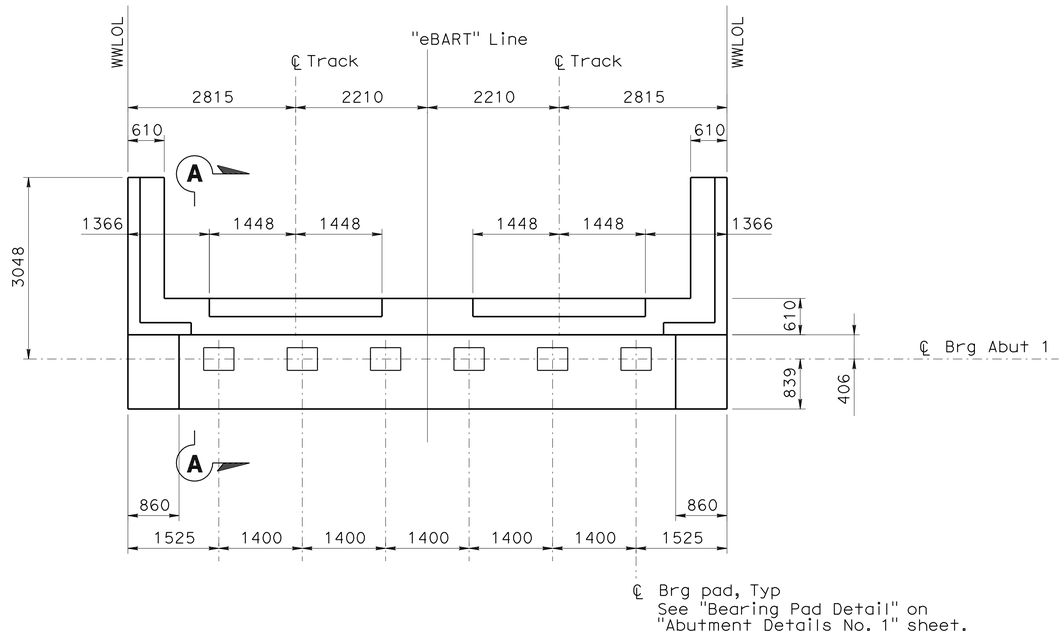

ABUTMENT PLAN
1:50

Notes:

1. For "Section A-A" see "Abutment Details No. 1" sheet.
2. For Shear Key Details, see "Abutment Details No. 1" sheet.
3. For Wingwall Details, see "Abutment Details No. 2" sheet.
4. For Approach Slab Details, see "Abutment Details No. 3" sheet.

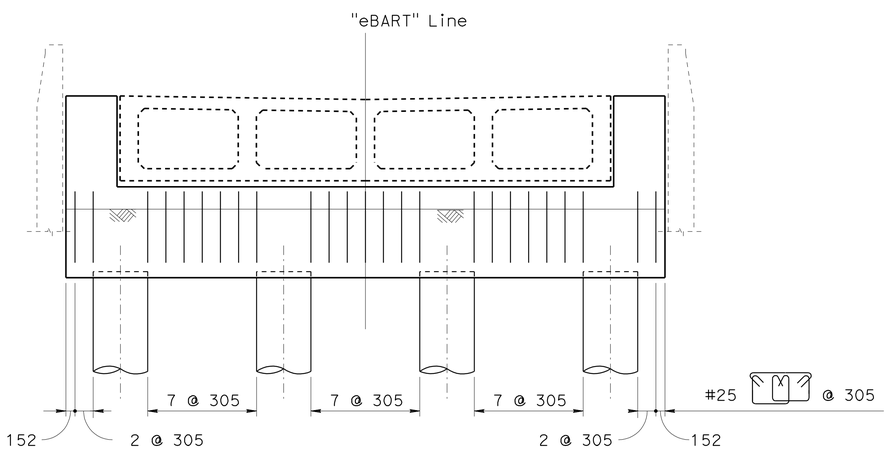

ABUTMENT ELEVATION
1:50

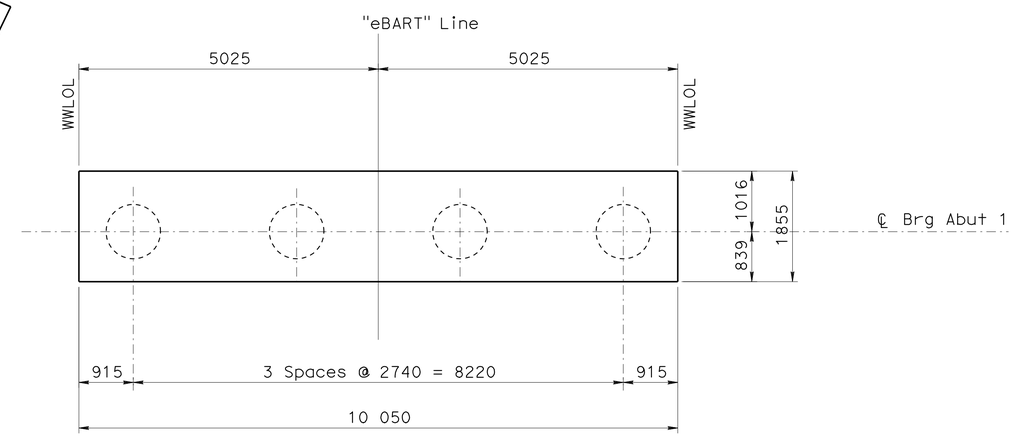

PILE LAYOUT
1:50

Note:

THE CONTRACTOR SHALL VERIFY ALL CONTROLLING FIELD DIMENSIONS BEFORE ORDERING OR FABRICATING ANY MATERIAL.

4 REVISED PER ADDENDUM No. 4 DATED JANUARY 26, 2010

ALL DIMENSIONS ARE IN MILLIMETERS UNLESS OTHERWISE SHOWN

DESIGN OVERSIGHT Emil A. Vergara Jr.
1-14-10
SIGN OFF DATE

	BY	CHECKED
DESIGN	T. Palmerino	B. Kattula / R. Hancock
DETAILS	E. Posadas	B. Kattula / R. Hancock
QUANTITIES	T. Palmerino	J. Melillo

PREPARED FOR THE STATE OF CALIFORNIA DEPARTMENT OF TRANSPORTATION

George K. Lo
PROJECT ENGINEER

BRIDGE NO. 28X0483
KILOMETER POST 39.9(24.8)

eBART UTILITY CORRIDOR UP
ABUTMENT 1 LAYOUT

DESIGN DETAIL SHEET (METRIC) (REV. 10/27/05)

ORIGINAL SCALE IN MILLIMETERS FOR REDUCED PLANS 0 10 20 30 40 50 60 70 80 90 100

CU 04275
EA 228591

DISREGARD PRINTS BEARING EARLIER REVISION DATES

REVISION DATES (PRELIMINARY STAGE ONLY) 12/17/07 02/28/08 04/29/08 07/18/08

SHEET 5 OF 15

FILE => 28X0483-f-a01_lo1.add

USERNAME => rfierard DATE PLOTTED => 21-JAN-2010 TIME PLOTTED => 14:39

DIST	COUNTY	ROUTE	KILOMETER POST TOTAL PROJECT	SHEET No	TOTAL SHEETS
04	CC	4	37.9/41.3	1008	1086

REGISTERED CIVIL ENGINEER 07/18/08 DATE

9-21-09
PLANS APPROVAL DATE

REGISTERED PROFESSIONAL ENGINEER GEORGE K. LO No. C18434 Exp. 06/30/09 CIVIL STATE OF CALIFORNIA

The State of California or its officers or agents shall not be responsible for the accuracy or completeness of electronic copies of this plan sheet.

CONTRA COSTA TRANSPORTATION AUTHORITY
3478 BUSKIRK AVENUE, SUITE 100
PLEASANT HILL, CA 94523

BEYAZ & PATEL, INC.
800 SOUTH BROADWAY, SUITE 200
WALNUT CREEK, CA 94596-5218

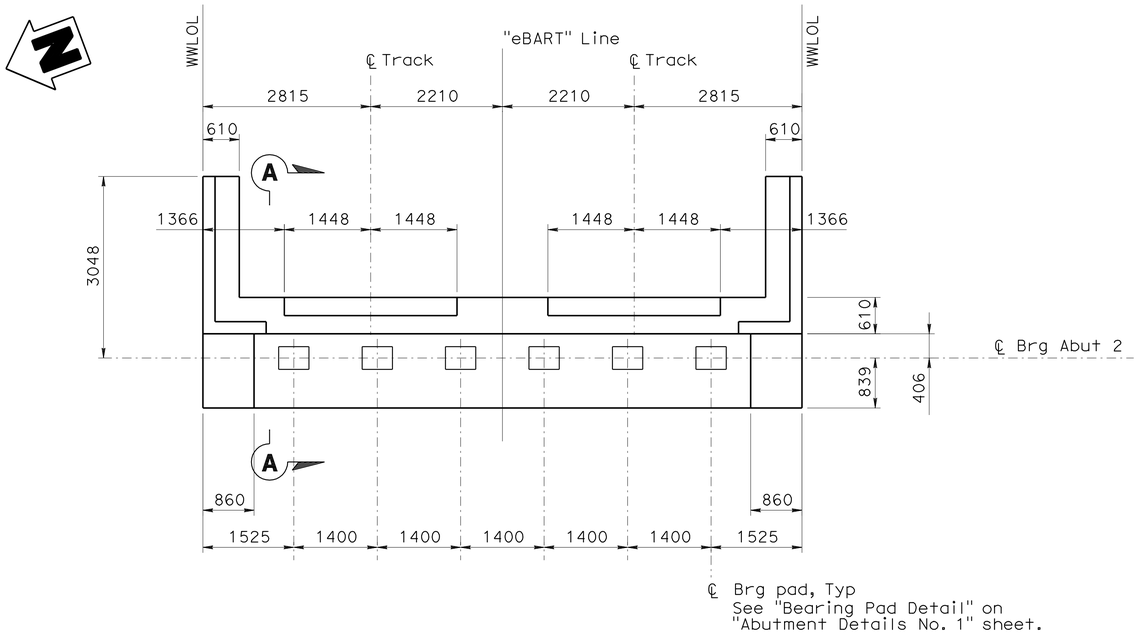

ABUTMENT PLAN

1:50

Notes:

1. For "Section A-A" see "Abutment Details No. 1" sheet.
2. For Shear Key Details, see "Abutment Details No. 1" sheet.
3. For Wingwall Details, see "Abutment Details No. 2" sheet.
4. For Approach Slab Details, see "Abutment Details No. 3" sheet.

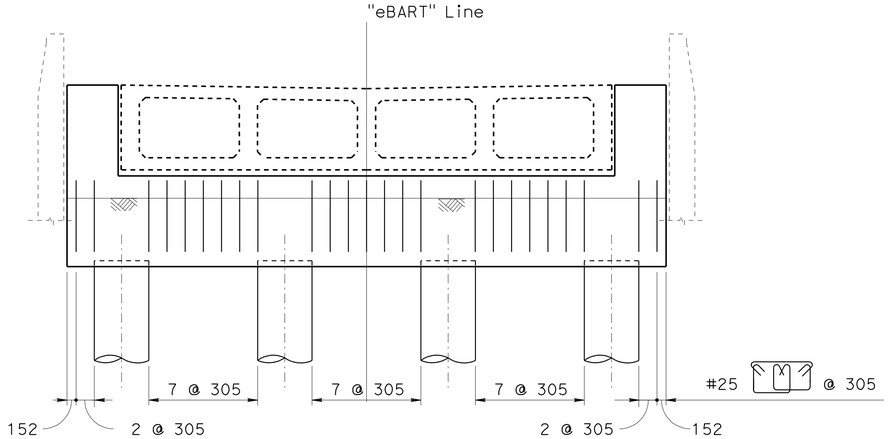

ABUTMENT ELEVATION

1:50

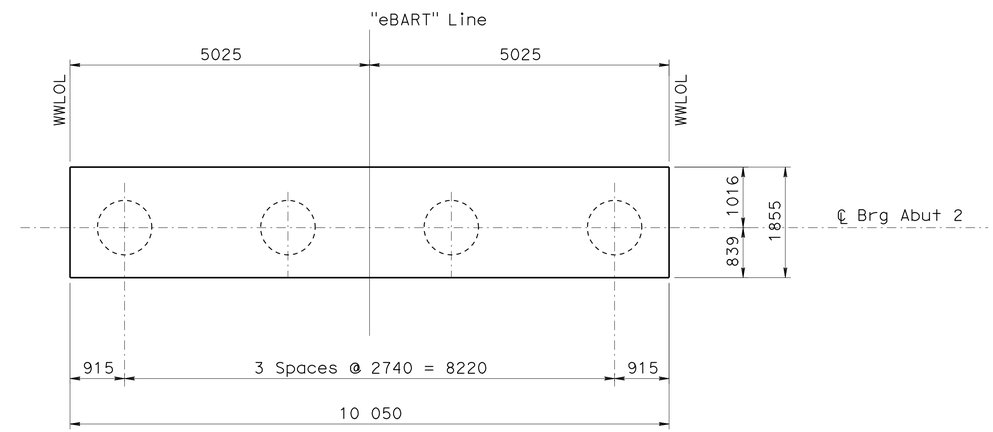

PILE LAYOUT

1:50

Note:

THE CONTRACTOR SHALL VERIFY ALL CONTROLLING FIELD DIMENSIONS BEFORE ORDERING OR FABRICATING ANY MATERIAL.

4 REVISED PER ADDENDUM No. 4 DATED JANUARY 26, 2010

ALL DIMENSIONS ARE IN MILLIMETERS UNLESS OTHERWISE SHOWN

DESIGN OVERSIGHT Emil A. Vergara Jr.
1-14-10
SIGN OFF DATE

	BY	CHECKED
DESIGN	T. Palmerino	B. Kattula / R. Hancock
DETAILS	E. Posadas	B. Kattula / R. Hancock
QUANTITIES	T. Palmerino	J. Melillo

PREPARED FOR THE STATE OF CALIFORNIA DEPARTMENT OF TRANSPORTATION

George K. Lo
PROJECT ENGINEER

BRIDGE NO. 28X0483
KILOMETER POST 39.9(24.8)

eBART UTILITY CORRIDOR UP
ABUTMENT 2 LAYOUT

DESIGN DETAIL SHEET (METRIC) (REV. 10/27/05)

ORIGINAL SCALE IN MILLIMETERS FOR REDUCED PLANS 0 10 20 30 40 50 60 70 80 90 100

CU 04275
EA 228591

DISREGARD PRINTS BEARING EARLIER REVISION DATES

REVISION DATES (PRELIMINARY STAGE ONLY) 12/17/07 02/28/08 04/29/08 07/18/08

SHEET 6 OF 15

FILE => 28X0483-f-a01_1o2.add

USERNAME => friehard DATE PLOTTED => 21-JAN-2010 TIME PLOTTED => 14:39

DIST	COUNTY	ROUTE	KILOMETER POST TOTAL PROJECT	SHEET No	TOTAL SHEETS
04	CC	4	37.9/41.3	1009	1086

REGISTERED CIVIL ENGINEER 1/30/09 DATE

9-21-09
PLANS APPROVAL DATE

REGISTERED PROFESSIONAL ENGINEER GEORGE K. LO No. C18434 Exp. 06/30/09 CIVIL STATE OF CALIFORNIA

The State of California or its officers or agents shall not be responsible for the accuracy or completeness of electronic copies of this plan sheet.

CONTRA COSTA TRANSPORTATION AUTHORITY
3478 BUSKIRK AVENUE, SUITE 100
PLEASANT HILL, CA 94523

BEYAZ & PATEL, INC.
800 SOUTH BROADWAY, SUITE 200
WALNUT CREEK, CA 94596-5218

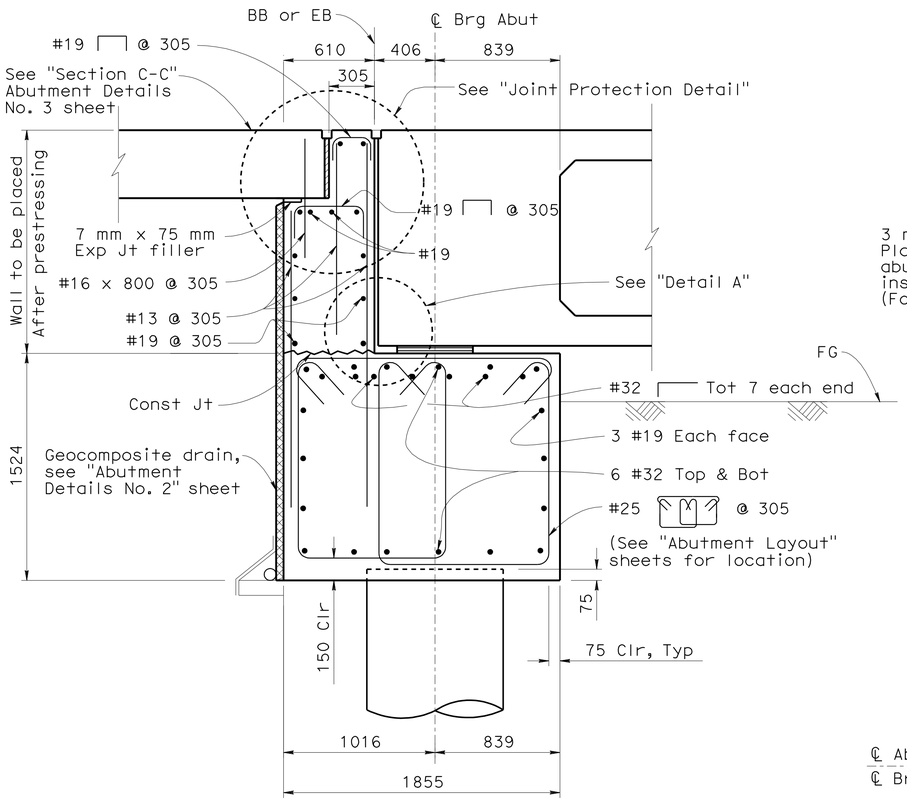

SECTION A-A
1:20

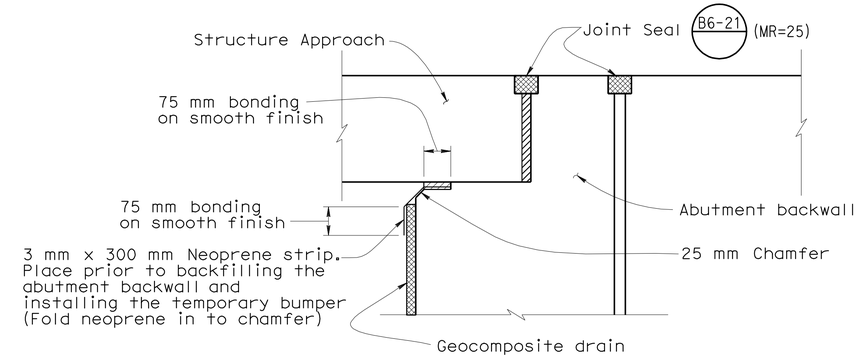

JOINT PROTECTION DETAIL
NO SCALE

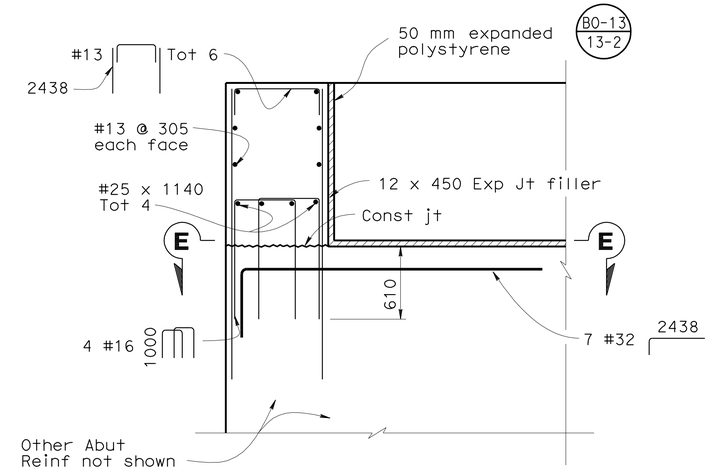

SHEAR KEY DETAIL
1:25

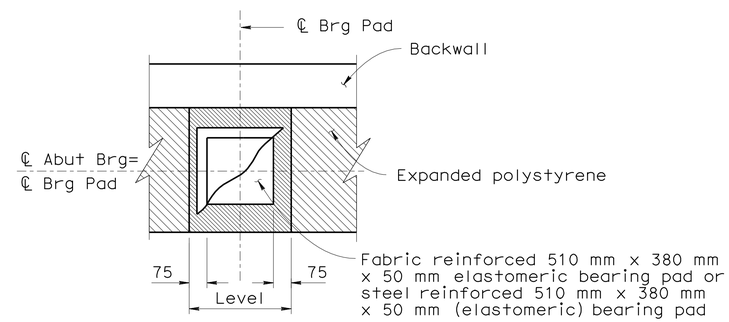

PLAN

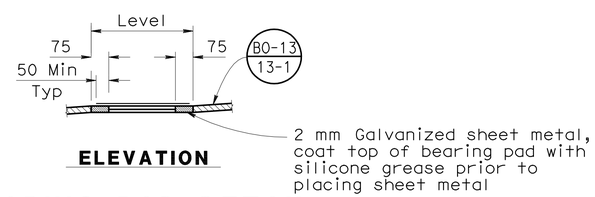

ELEVATION

BEARING PAD DETAIL
NO SCALE

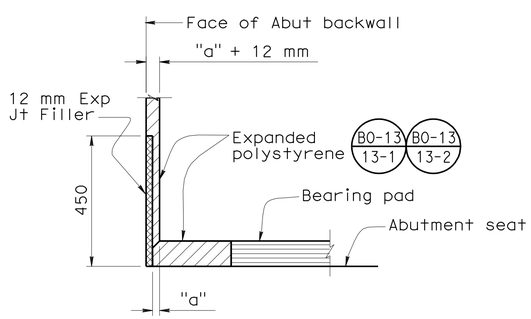

DETAIL A
NO SCALE

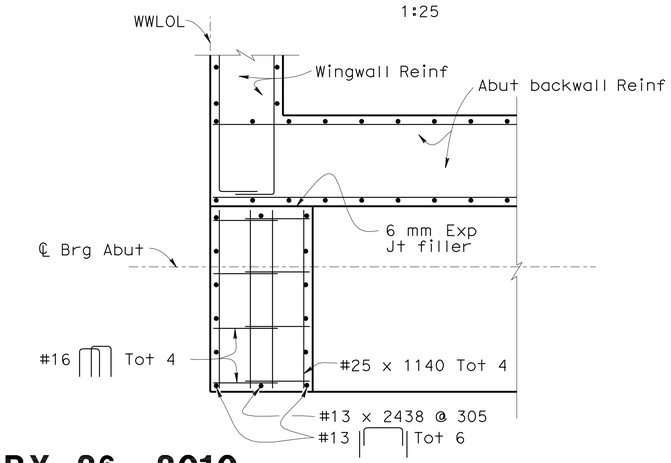

SECTION E-E
1:25

ALL DIMENSIONS ARE IN MILLIMETERS UNLESS OTHERWISE SHOWN

Note:
THE CONTRACTOR SHALL VERIFY ALL CONTROLLING FIELD DIMENSIONS BEFORE ORDERING OR FABRICATING ANY MATERIAL.

4 REVISED PER ADDENDUM No. 4 DATED JANUARY 26, 2010

2 REVISED PER ADDENDUM No. 2 DATED DECEMBER 30, 2009

DESIGN	BY T. Palmerino	CHECKED B. Kattula / R. Hancock	
DETAILS	BY E. Posadas	CHECKED B. Kattula / R. Hancock	
QUANTITIES	BY T. Palmerino	CHECKED J. Melillo	

DESIGN OVERSIGHT Emil A. Vergara Jr.
1-14-10
SIGN OFF DATE

PREPARED FOR THE STATE OF CALIFORNIA DEPARTMENT OF TRANSPORTATION

George K. Lo
PROJECT ENGINEER

BRIDGE NO. 28X0483
KILOMETER POST 39.9(24.8)

eBART UTILITY CORRIDOR UP
ABUTMENT DETAILS NO. 1

DESIGN DETAIL SHEET (METRIC) (REV. 10/27/05)

ORIGINAL SCALE IN MILLIMETERS FOR REDUCED PLANS 0 10 20 30 40 50 60 70 80 90 100

CU 04275
EA 228591

DISREGARD PRINTS BEARING EARLIER REVISION DATES

REVISION DATES (PRELIMINARY STAGE ONLY) 12/17/07 02/18/08 04/29/08 07/18/08 01/30/09

SHEET 7 OF 15

FILE => 28X0483-f-a01dt01.add

USERNAME => tfrenard DATE PLOTTED => 21-JAN-2010 TIME PLOTTED => 14:39

DIST	COUNTY	ROUTE	KILOMETER POST TOTAL PROJECT	SHEET No	TOTAL SHEETS
04	CC	4	37.9/41.3	1010	1086

REGISTERED CIVIL ENGINEER 07/18/08 DATE

9-21-09
PLANS APPROVAL DATE

The State of California or its officers or agents shall not be responsible for the accuracy or completeness of electronic copies of this plan sheet.

REGISTERED PROFESSIONAL ENGINEER GEORGE K. LO No. C18434 Exp. 06/30/09 CIVIL STATE OF CALIFORNIA

CONTRA COSTA TRANSPORTATION AUTHORITY
3478 BUSKIRK AVENUE, SUITE 100
PLEASANT HILL, CA 94523

BEYAZ & PATEL, INC.
800 SOUTH BROADWAY, SUITE 200
WALNUT CREEK, CA 94596-5218

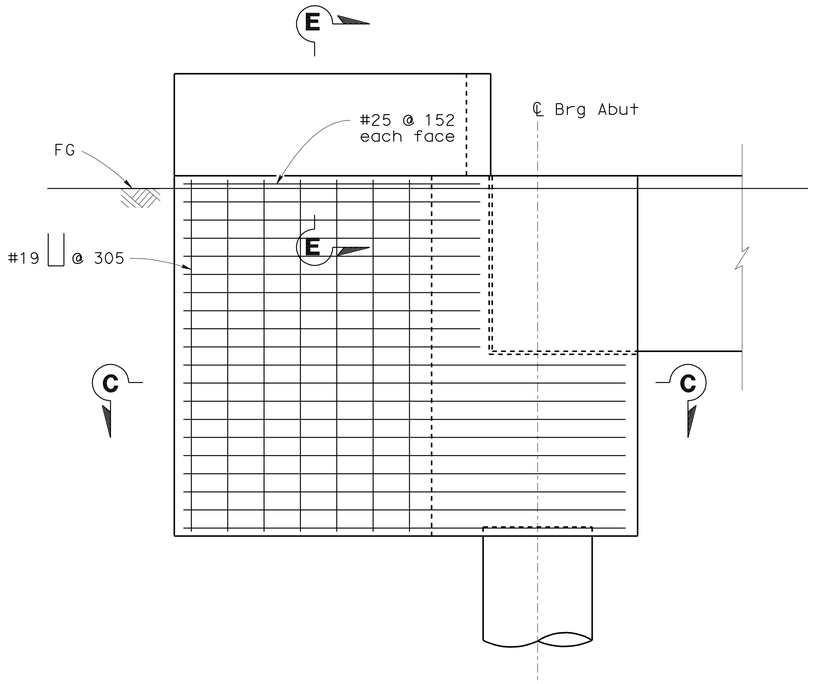

WINGWALL ELEVATION
1:25

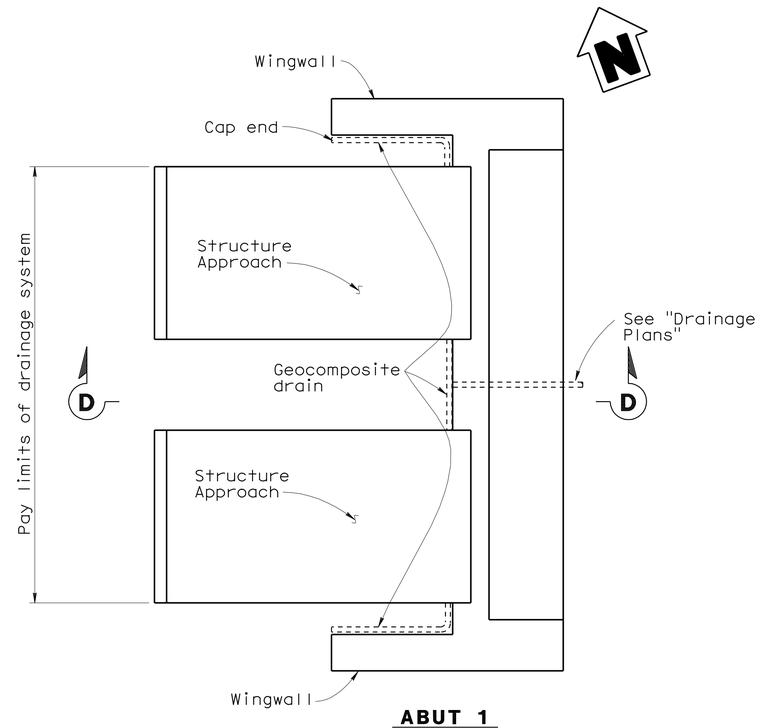

ABUT 1

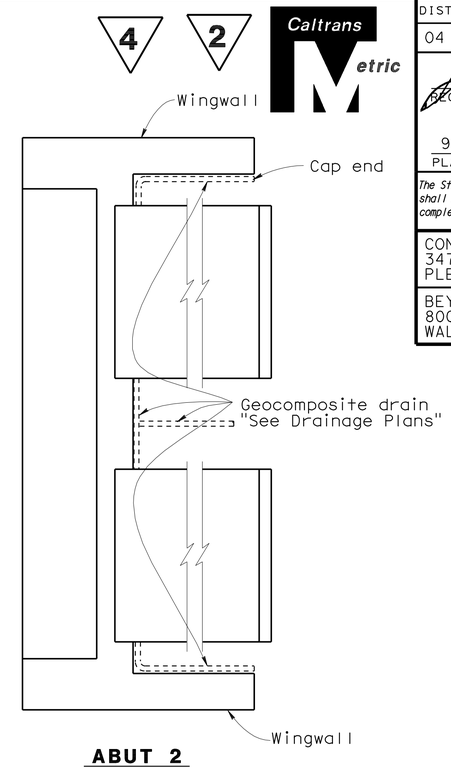

ABUT 2

TYPICAL PLAN
1:50

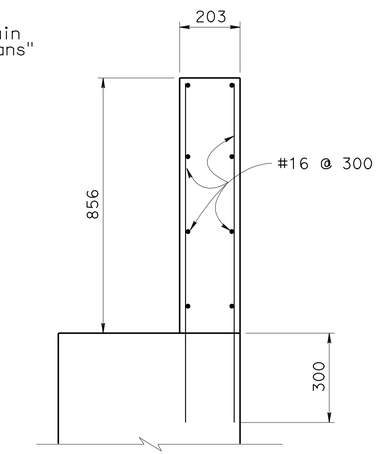

SECTION E-E
1:10

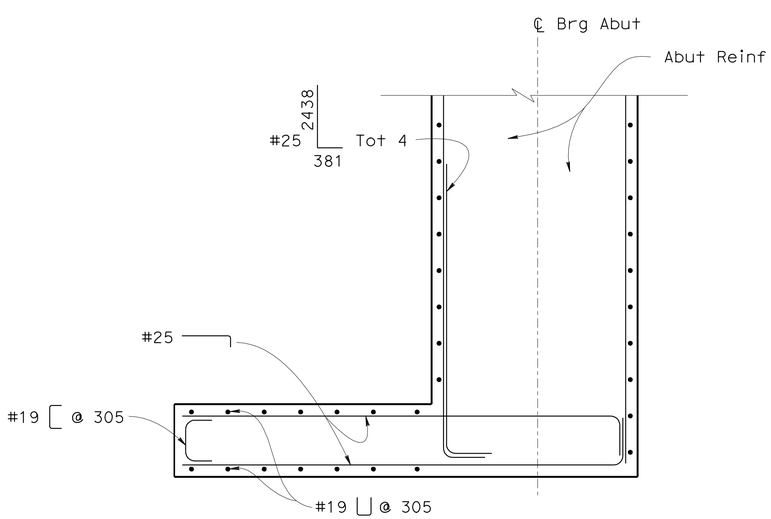

SECTION C-C
1:25

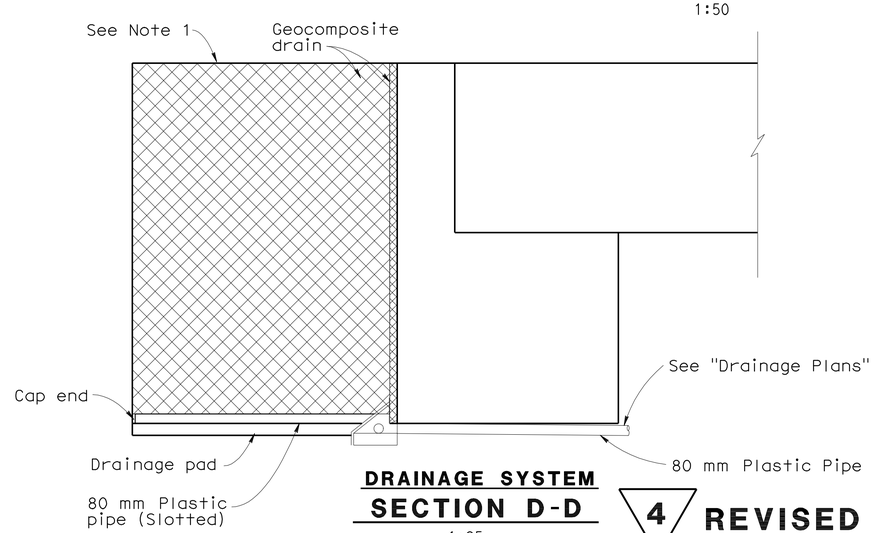

DRAINAGE SYSTEM
SECTION D-D
1:25

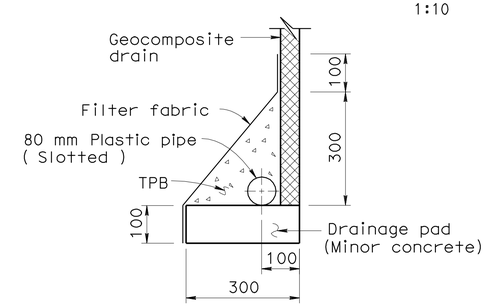

DRAINAGE DETAIL
No scale

1. Ballast Walls and Barriers not shown for clarity.

Note:
THE CONTRACTOR SHALL VERIFY ALL CONTROLLING FIELD DIMENSIONS BEFORE ORDERING OR FABRICATING ANY MATERIAL.

4 REVISED PER ADDENDUM No. 4 DATED JANUARY 26, 2010

2 REVISED PER ADDENDUM No. 2 DATED DECEMBER 30, 2009

ALL DIMENSIONS ARE IN MILLIMETERS UNLESS OTHERWISE SHOWN

DESIGN OVERSIGHT Emil A. Vergara Jr. 1-14-10 SIGN OFF DATE	DESIGN	BY T. Palmerino	CHECKED B. Kattula / R. Hancock
	DETAILS	BY E. Posadas	CHECKED B. Kattula / R. Hancock
	QUANTITIES	BY T. Palmerino	CHECKED J. Melillo

PREPARED FOR THE STATE OF CALIFORNIA DEPARTMENT OF TRANSPORTATION

George K. Lo
PROJECT ENGINEER

BRIDGE NO. 28X0483
KILOMETER POST 39.9(24.8)

eBART UTILITY CORRIDOR UP
ABUTMENT DETAILS NO. 2

DESIGN DETAIL SHEET (METRIC) (REV. 10/27/05)

ORIGINAL SCALE IN MILLIMETERS FOR REDUCED PLANS 0 10 20 30 40 50 60 70 80 90 100

CU 04275
EA 228591

DISREGARD PRINTS BEARING EARLIER REVISION DATES

REVISION DATES (PRELIMINARY STAGE ONLY) 12/17/07 02/25/08 04/29/08 07/18/08

SHEET 8 OF 15

FILE => 28X0483-f-a01dt02.add

USERNAME => trienard DATE PLOTTED => 21-JAN-2010 TIME PLOTTED => 14:39

DIST	COUNTY	ROUTE	KILOMETER POST TOTAL PROJECT	SHEET No	TOTAL SHEETS
04	CC	4	37.9/41.3	1011	1086

REGISTERED CIVIL ENGINEER 07/18/08 DATE

9-21-09
PLANS APPROVAL DATE

REGISTERED PROFESSIONAL ENGINEER GEORGE K. LO No. C18434 Exp. 06/30/09 CIVIL STATE OF CALIFORNIA

The State of California or its officers or agents shall not be responsible for the accuracy or completeness of electronic copies of this plan sheet.

CONTRA COSTA TRANSPORTATION AUTHORITY
3478 BUSKIRK AVENUE, SUITE 100
PLEASANT HILL, CA 94523

BEYAZ & PATEL, INC.
800 SOUTH BROADWAY, SUITE 200
WALNUT CREEK, CA 94596-5218

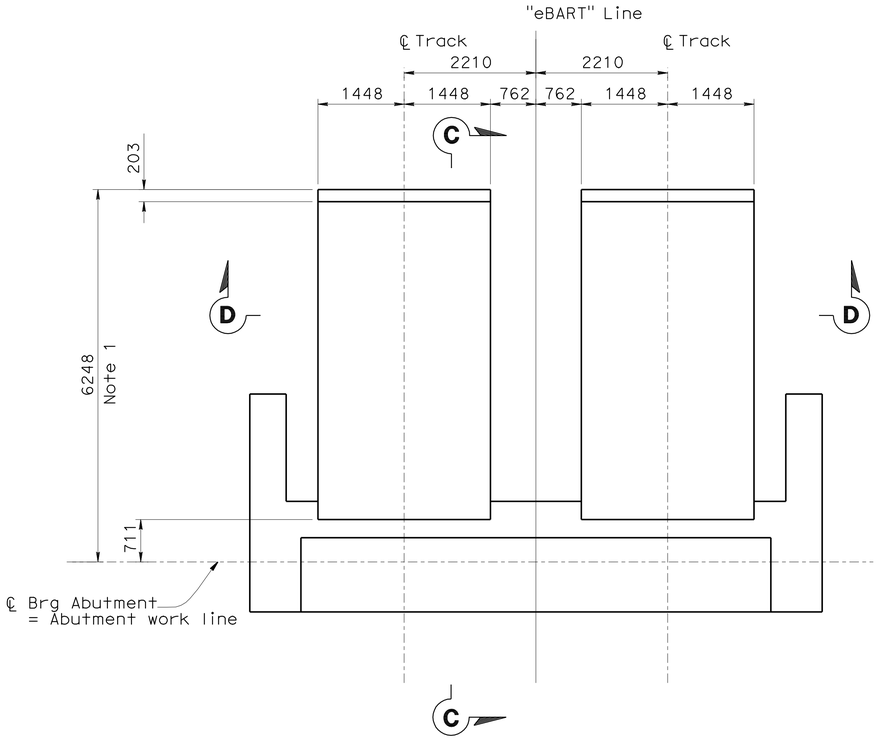

PLAN - APPROACH SLAB

1:50

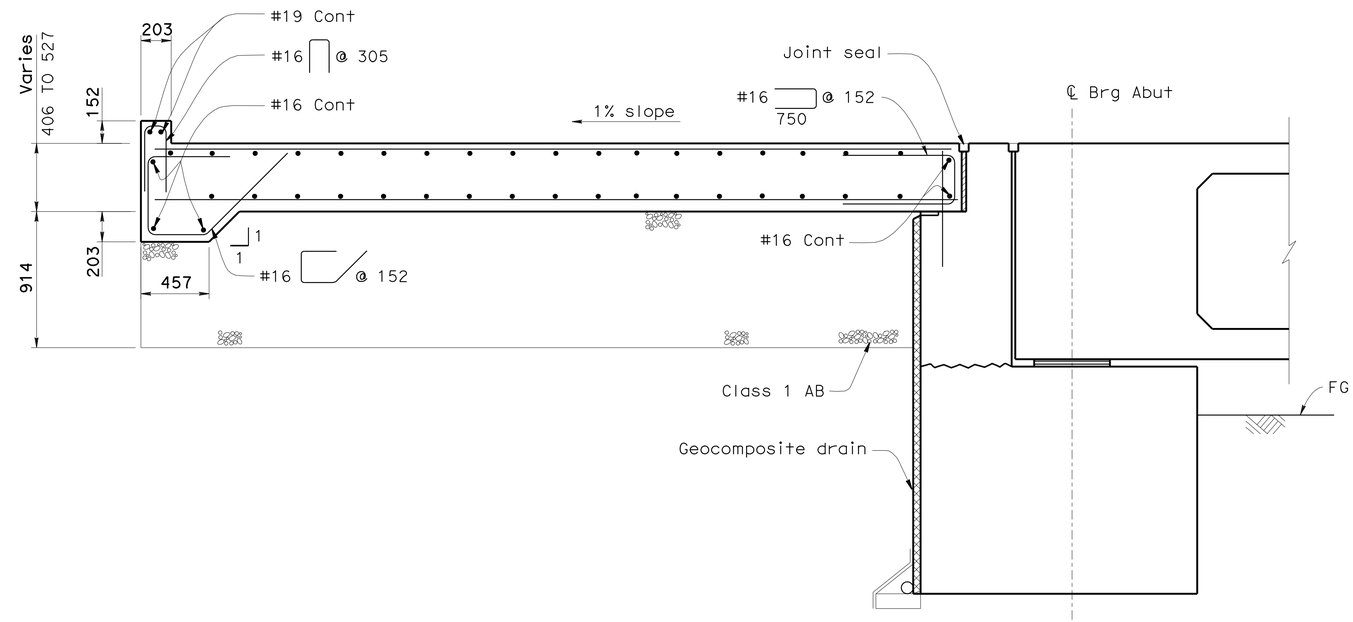

SECTION C-C

1:20

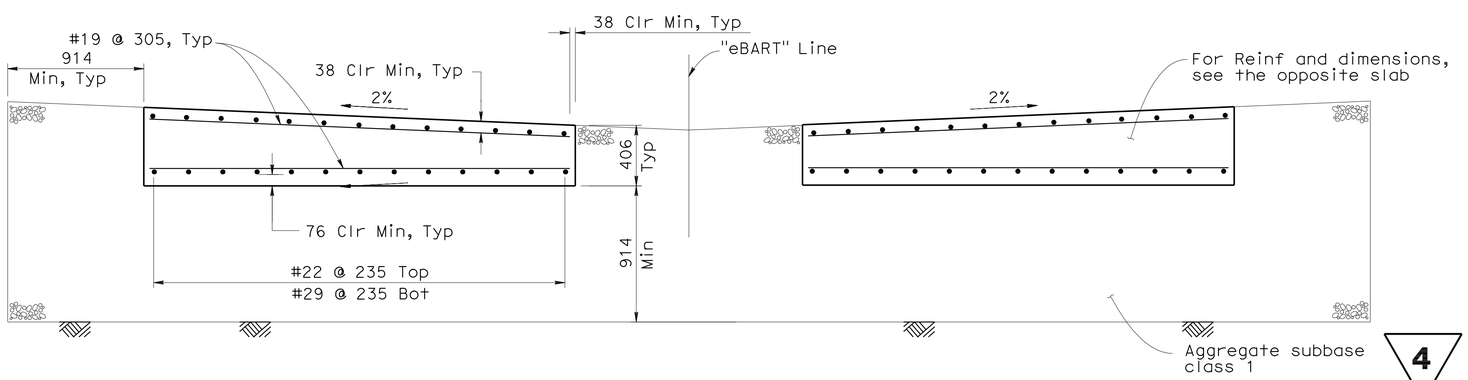

SECTION D-D

1:20

Notes:

1. The 6248 dimension is a distance between track station point at Abutment and Slab free end point centerline measured along centerline of Track.
2. Ballast Wall and Barrier not shown for clarity.

Note:

THE CONTRACTOR SHALL VERIFY ALL CONTROLLING FIELD DIMENSIONS BEFORE ORDERING OR FABRICATING ANY MATERIAL.

4 REVISED PER ADDENDUM No. 4 DATED JANUARY 26, 2010

2 REVISED PER ADDENDUM No. 2 DATED DECEMBER 30, 2009

ALL DIMENSIONS ARE IN MILLIMETERS UNLESS OTHERWISE SHOWN

DESIGN OVERSIGHT Emil A. Vergara Jr.
1-14-10
SIGN OFF DATE

	BY	CHECKED
DESIGN	T. Palmerino	B. Kattula / R. Hancock
DETAILS	E. Posadas	B. Kattula / R. Hancock
QUANTITIES	T. Palmerino	J. Melillo

PREPARED FOR THE STATE OF CALIFORNIA DEPARTMENT OF TRANSPORTATION

George K. Lo
PROJECT ENGINEER

BRIDGE NO. 28X0483
KILOMETER POST 39.9(24.8)

eBART UTILITY CORRIDOR UP
ABUTMENT DETAILS NO. 3

DESIGN DETAIL SHEET (METRIC) (REV. 10/27/05)

ORIGINAL SCALE IN MILLIMETERS FOR REDUCED PLANS 0 10 20 30 40 50 60 70 80 90 100

CU 04275
EA 228591

DISREGARD PRINTS BEARING EARLIER REVISION DATES

REVISION DATES (PRELIMINARY STAGE ONLY) 12/17/07 02/13/08 04/29/08 07/18/08

SHEET 9 OF 15

FILE => 28X0483-f-a01dt03.add

USERNAME => rfrenord DATE PLOTTED => 21-JAN-2010 TIME PLOTTED => 14:40

DIST	COUNTY	ROUTE	KILOMETER POST TOTAL PROJECT	SHEET No	TOTAL SHEETS
04	CC	4	37.9/41.3	1012	1086

REGISTERED CIVIL ENGINEER 07/18/08 DATE

9-21-09
PLANS APPROVAL DATE

REGISTERED PROFESSIONAL ENGINEER GEORGE K. LO No. C18434 Exp. 06/30/09 CIVIL STATE OF CALIFORNIA

The State of California or its officers or agents shall not be responsible for the accuracy or completeness of electronic copies of this plan sheet.

CONTRA COSTA TRANSPORTATION AUTHORITY
3478 BUSKIRK AVENUE, SUITE 100
PLEASANT HILL, CA 94523

BEYAZ & PATEL, INC.
800 SOUTH BROADWAY, SUITE 200
WALNUT CREEK, CA 94596-5218

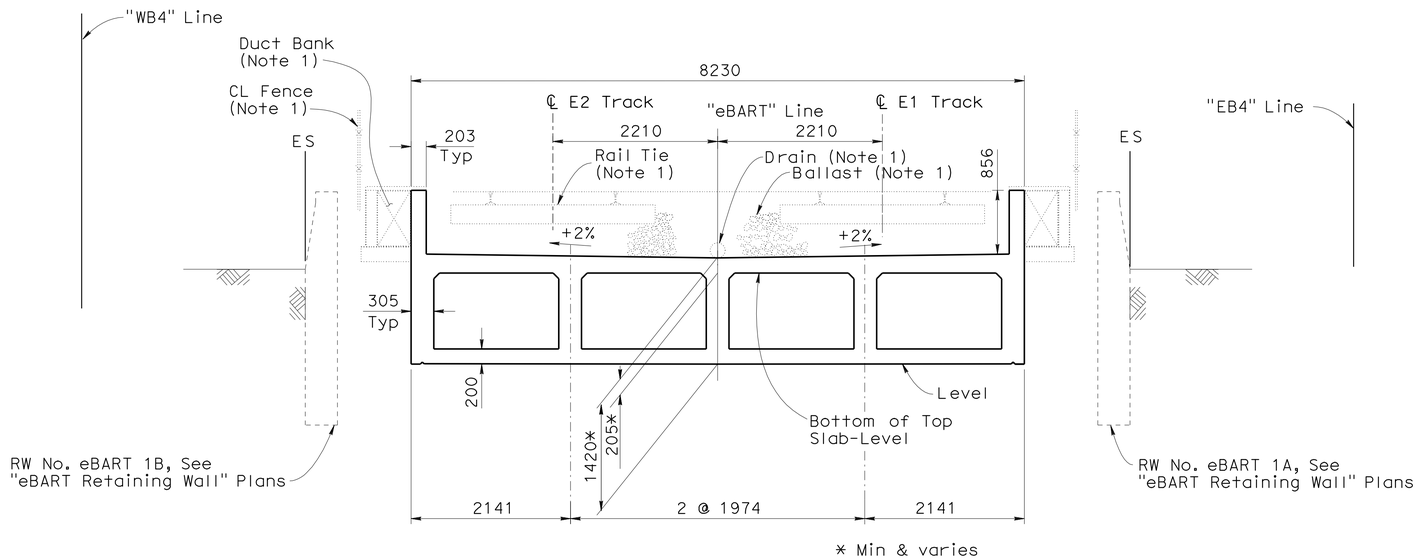

eBART TRACKWAY

TYPICAL SECTION

1:40

Note:

1. The following items are not included in this Contract:

   -CL Fence
   -Duct Bank
   -Rail Tie and Rail
   -Ballast
   -Drain

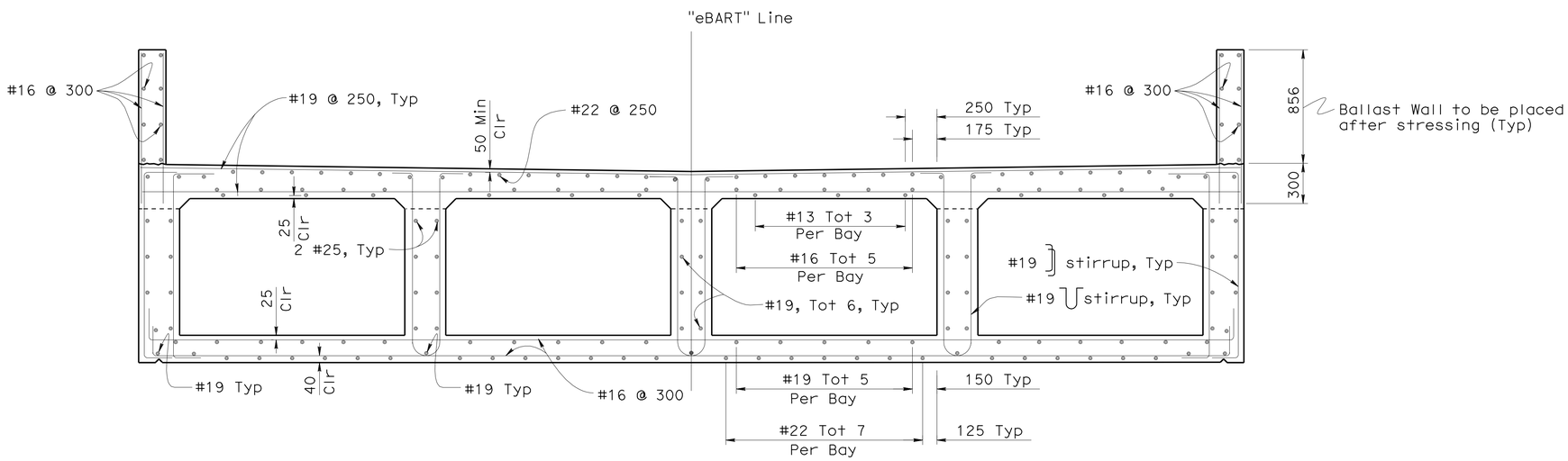

TYPICAL SECTION

1:20

B0-5 B7-1 B8-5

4 REVISED PER ADDENDUM No. 4 DATED JANUARY 26, 2010

2 REVISED PER ADDENDUM No. 2 DATED DECEMBER 30, 2009

Note:

THE CONTRACTOR SHALL VERIFY ALL CONTROLLING FIELD DIMENSIONS BEFORE ORDERING OR FABRICATING ANY MATERIAL.

ALL DIMENSIONS ARE IN MILLIMETERS UNLESS OTHERWISE SHOWN

DESIGN OVERSIGHT Emil A. Vergara Jr.
1-14-10
SIGN OFF DATE

	BY	CHECKED
DESIGN	W. Lau	B. Kattula / R. Hancock
DETAILS	E. Posadas	B. Kattula / R. Hancock
QUANTITIES	T. Palmerino	J. Melillo

PREPARED FOR THE STATE OF CALIFORNIA DEPARTMENT OF TRANSPORTATION

George K. Lo
PROJECT ENGINEER

BRIDGE NO. 28X0483
KILOMETER POST 39.9(24.8)

eBART UTILITY CORRIDOR UP

TYPICAL SECTION

DESIGN DETAIL SHEET (METRIC) (REV. 10/27/05)

ORIGINAL SCALE IN MILLIMETERS FOR REDUCED PLANS 0 10 20 30 40 50 60 70 80 90 100

CU 04275
EA 228591

DISREGARD PRINTS BEARING EARLIER REVISION DATES

REVISION DATES (PRELIMINARY STAGE ONLY) 12/17/07 02/15/08 04/29/08 07/18/08

SHEET 10 OF 15

FILE => 28X0483-k-ts01.dgn

USERNAME => friemard DATE PLOTTED => 21-JAN-2010 TIME PLOTTED => 14:40

DIST	COUNTY	ROUTE	KILOMETER POST TOTAL PROJECT	SHEET No	TOTAL SHEETS
04	CC	4	37.9/41.3	1013	1086

REGISTERED CIVIL ENGINEER 07/18/08 DATE

9-21-09
PLANS APPROVAL DATE

REGISTERED PROFESSIONAL ENGINEER GEORGE K. LO No. C18434 Exp. 06/30/09 CIVIL STATE OF CALIFORNIA

The State of California or its officers or agents shall not be responsible for the accuracy or completeness of electronic copies of this plan sheet.

CONTRA COSTA TRANSPORTATION AUTHORITY
3478 BUSKIRK AVENUE, SUITE 100
PLEASANT HILL, CA 94523

BEYAZ & PATEL, INC.
800 SOUTH BROADWAY, SUITE 200
WALNUT CREEK, CA 94596-5218

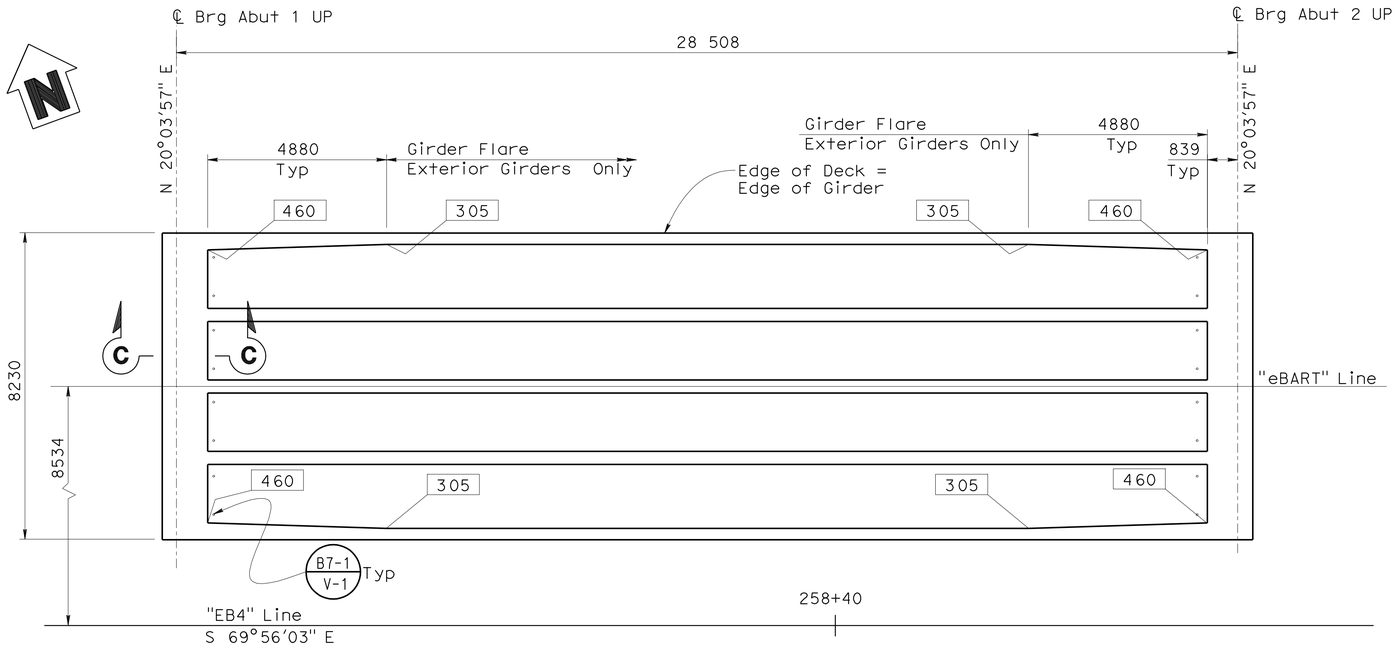

PLAN
1:80

PRESTRESSING NOTES

1860 MPa Low Relaxation Strand:

P_{jack} = 51,000 kN

Anchor Set = 9.5 mm

Friction Curvature Coefficient, u = 0.15

Friction Wobble Coefficient, k = 6.6 x 10^{-7}/mm

Total Number of Girders = 5

Distribution of prestress force (Pjack) between girders shall not exceed the ratio of 3:2. Maximum final force variation between girders shall not exceed 3200 kN.

Concrete: f'_{ci} = 28 MPa @ time of stressing

f'_c = 43 MPa @ 28 days

Contractor shall submit elongation calculations based on initial stress at

[X] = 0.949 times jacking stress.

One end stressing shall be performed from Abutment 1.

Legend:

Indicates Girder stem width, see B7-1 / S-3

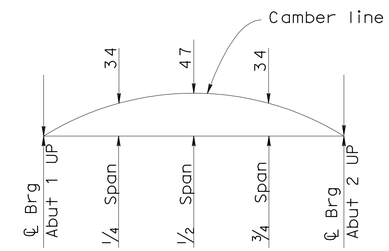

CAMBER DIAGRAM
No scale

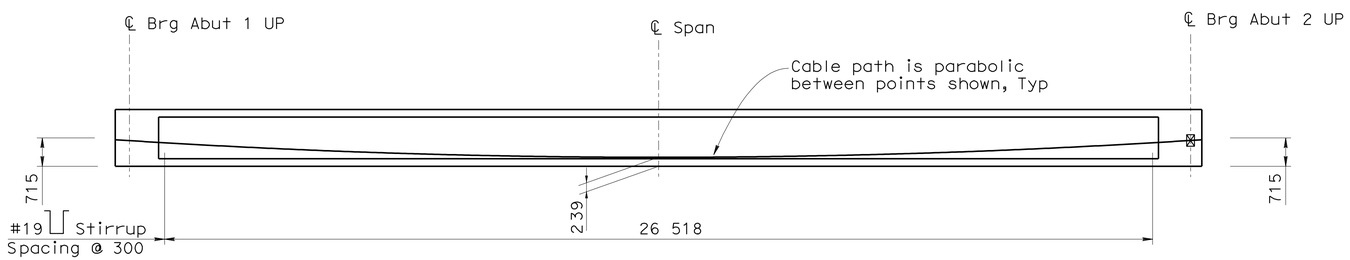

ELEVATION
1:80

B0-5 B7-1 B8-5

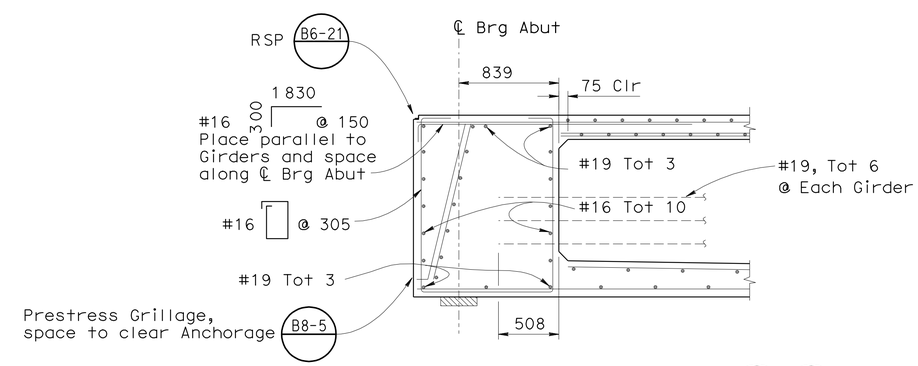

SECTION C-C
1:25

RSP B6-21 B8-5

Note:
THE CONTRACTOR SHALL VERIFY ALL CONTROLLING FIELD DIMENSIONS BEFORE ORDERING OR FABRICATING ANY MATERIAL.

4 REVISED PER ADDENDUM No. 4 DATED JANUARY 26, 2010

2 REVISED PER ADDENDUM No. 2 DATED DECEMBER 30, 2009

ALL DIMENSIONS ARE IN MILLIMETERS UNLESS OTHERWISE SHOWN

DESIGN OVERSIGHT Emil A. Vergara Jr.
1-14-10
SIGN OFF DATE

	BY	CHECKED
DESIGN	W. Lau	B. Kattula / R. Hancock
DETAILS	E. Posadas	B. Kattula / R. Hancock
QUANTITIES	T. Palmerino	J. Melillo

PREPARED FOR THE STATE OF CALIFORNIA DEPARTMENT OF TRANSPORTATION

George K. Lo
PROJECT ENGINEER

BRIDGE NO. 28X0483
KILOMETER POST 39.9(24.8)

eBART UTILITY CORRIDOR UP
GIRDER LAYOUT

DESIGN DETAIL SHEET (METRIC) (REV. 10/27/05)

ORIGINAL SCALE IN MILLIMETERS FOR REDUCED PLANS 0 10 20 30 40 50 60 70 80 90 100

CU 04275
EA 228591

DISREGARD PRINTS BEARING EARLIER REVISION DATES

REVISION DATES (PRELIMINARY STAGE ONLY) 12/17/07 02/25/08 04/29/08 07/18/08

SHEET 11 OF 15

FILE => 28X0483-1-g_lo01.add

USERNAME => friemard DATE PLOTTED => 21-JAN-2010 TIME PLOTTED => 14:40