ACHSSTPG-000C(353)E

Dist	COUNTY	ROUTE	POST MILES TOTAL PROJECT	SHEET No.	TOTAL SHEETS
04	Ala,CC	4,80,84, 92,238,etc.	Var	1	141

STATE OF CALIFORNIA
DEPARTMENT OF TRANSPORTATION

PROJECT PLANS FOR CONSTRUCTION ON
STATE HIGHWAY
IN ALAMEDA AND CONTRA COSTA COUNTIES AT VARIOUS LOCATIONS

TO BE SUPPLEMENTED BY STANDARD PLANS DATED MAY 2006

INDEX OF PLANS

SHEET No.	DESCRIPTION
1	TITLE AND LOCATION MAP
2-4	LOCATIONS OF CONSTRUCTION
5-40	CONSTRUCTION DETAILS
41-44	EROSION CONTROL PLANS
45-83	CONSTRUCTION AREA SIGNS
84-91	TRAFFIC HANDLING PLANS
92-101	SUMMARY OF QUANTITIES
102-130	REVISED AND NEW STANDARD PLANS

STRUCTURE PLANS

131-141	CONCRETE BARRIER TRANSITIONS

THE STANDARD PLANS LIST APPLICABLE TO THIS CONTRACT IS INCLUDED IN THE NOTICE TO BIDDERS AND SPECIAL PROVISIONS BOOK.

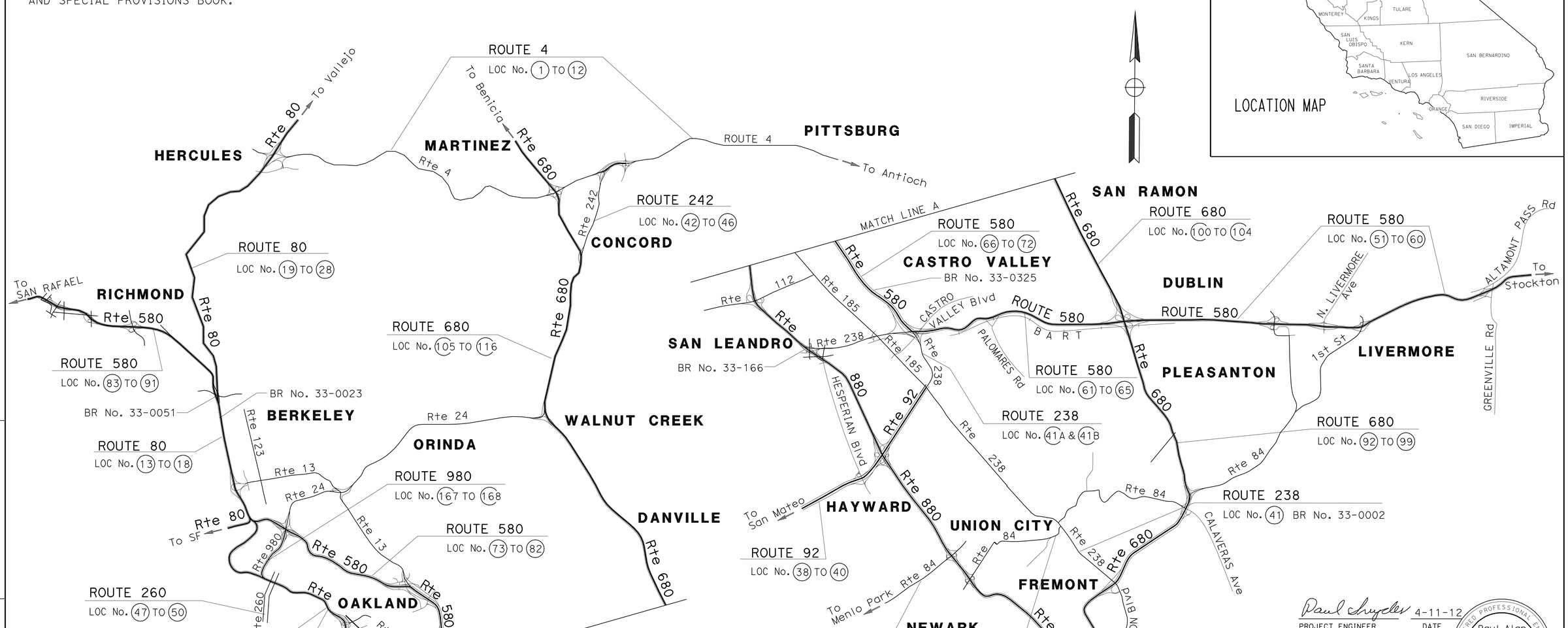

NOTE:
THE TABLE OF LOCATIONS OF CONSTRUCTION IS SHOWN ON THE LOCATIONS OF CONSTRUCTION SHEET.

NO SCALE

THE CONTRACTOR SHALL POSSESS THE CLASS (OR CLASSES) OF LICENSE AS SPECIFIED IN THE "NOTICE TO BIDDERS."

Paul Snyder 4-11-12
PROJECT ENGINEER DATE
REGISTERED CIVIL ENGINEER

June 4, 2012
PLANS APPROVAL DATE

REGISTERED PROFESSIONAL ENGINEER
Paul Alan Snyder
No. 41128
Exp. 3-31-13
CIVIL
STATE OF CALIFORNIA

THE STATE OF CALIFORNIA OR ITS OFFICERS OR AGENTS SHALL NOT BE RESPONSIBLE FOR THE ACCURACY OR COMPLETENESS OF SCANNED COPIES OF THIS PLAN SHEET.

CONTRACT No.	04-0A7904
PROJECT ID	0400000164

PROJECT MANAGER HAMID FATHOLLAHI
DESIGN ENGINEER ALBERT J. ZEPEDA

LAST REVISION 04-11-12
DATE PLOTTED => 16-OCT-2012
TIME PLOTTED => 05:28

Dist	COUNTY	ROUTE	POST MILES TOTAL PROJECT	SHEET No.	TOTAL SHEETS
04	Ala/CC	4,80,84, 92,238,etc.	Var	2	141

Paul Snyder 4-11-12
REGISTERED CIVIL ENGINEER DATE

6-4-12
PLANS APPROVAL DATE

REGISTERED PROFESSIONAL ENGINEER Paul Alan Snyder No. 41128 Exp. 3-31-13 CIVIL STATE OF CALIFORNIA

THE STATE OF CALIFORNIA OR ITS OFFICERS OR AGENTS SHALL NOT BE RESPONSIBLE FOR THE ACCURACY OR COMPLETENESS OF SCANNED COPIES OF THIS PLAN SHEET.

LOCATIONS OF CONSTRUCTION

PROJECT WORK LOCATIONS No.	COUNTY	ROUTE	POST MILE PREFIX	PM	SITE DESCRIPTIONS
1	CC	4	R	4.936	EB ON-RAMP FROM CUMMING SKYWAY, WEST OF MARTINEZ. FIRST MBGR ON LEFT SHOULDER, ON CURVE.
2				8.409	WB ON-RAMP FROM ALHAMBRA Ave, RIGHT SHOULDER, AT PEDESTRIAN UNDERCROSSING.
3				8.449	EB OFF-RAMP TO ALHAMBRA Ave, RIGHT SHOULDER, CONNECTED TO TYPE 1 BARRIER RAILING
4				11.666	EB OFF-RAMP TO PACHECO Blvd (MUIR Rd),IN MARTINEZ. LEFT SHOULDER.
5				13.637	EB OFF-RAMP TO SOLANO WAY(MARSH Dr-ARNOLD INDUSTRIAL Pl), RIGHT SIDE, AT OH SIGN WEST OF RAMP (1) & CONNECTING TO CONCRETE BRIDGE BARRIER NEAR BEGINNING OF RAMP (2).
6				13.706	WB ON-RAMP FROM SOLANO WAY (ARNOLD INDUSTRIAL WAY). RIGHT SHOULDER, CONNECTED TO CONCRETE BRIDGE BARRIER.
7				15.753	EB ON-RAMP FROM NB PORT CHICAGO HIGHWAY, RIGHT SHOULDER, SHIELDING RAILROAD TUNNEL.
8				17.181	EB ON-RAMP FROM NB WILLOW PASS Rd(NOT SAN MARCO). ON RIGHT SIDE, SHIELDING TOS PANEL.
9				17.183	WB OFF-RAMP TO SB WILLOW PASS Rd(SB, NOT SAN MARCO). TWO LONG MBGR'S ON RIGHT SIDE. EAST (1) & WEST (2).
10				19.877	EB OFF-RAMP TO SB BAILEY Rd,IN PITTSBURG. TWO RAILINGS ON RIGHT SIDE, WEST (1) & EAST (2) CONNECTED TO RETAINING WALLS.
11				19.950	WB ON-RAMP FROM BAILEY Rd,BOTH SIDES. RIGHT (1) SIDE CONNECTS TO SOUNDWALL, LEFT (2) CONNECTS TO CONCRETE BARRIER.
12				20.294	EB ON-RAMP FROM BAILEY Rd IN PITTSBURG. LEFT (1) AND RIGHT (2) SHOULDERS. RIGHT SIDE ATTACHED TO SOUNDWALL.
13	Ala	80		3.642	EB OFF-RAMP TO POWELL St, IN EMERYVILLE, LEFT SHOULDER.
14				4.671	EB ON-RAMP FROM NB (WB) Rte 13, LEFT SIDE (1), CONNECTED TO CONCRETE BARRIER, RIGHT SIDE (2) ALONG POTTER St.
15				4.761	WB OFF-RAMP TO SB (EB) Rte 13 (ASHBY Ave) IN BERKELY. LEFT SHOULDER, UNDER BRIDGE.
16				5.704	EB OFF-RAMP TO UNIVERSITY Ave AND FRONTAGE Rd IN BERKELY. LEFT (1) & RIGHT (2) SIDES, CONNECT TO BRIDGE BARRIER RAILS.
17				5.67	WB ON-RAMP FROM UNIVERSITY Ave IN BERKELY, RIGHT SHOULDER, CONNECTS TO UNIVERSITY Ave OC ABUTMENT.
18				7.107	WB ON-RAMP FROM BUCHANAN St IN ALBANY. LEFT SHOULDER, CONNECTS TO BRIDGE ABUTMENT.
19	CC	80		0.101	EB OFF-RAMP TO CENTRAL Ave IN RICHMOND. RIGHT SHOULDER, CONNECTS TO CONCRETE BARRIER.
20				0.137	WB ON-RAMP FROM CENTRAL Ave IN RICHMOND. RIGHT SHOULDER, CONNECTED TO CONCRETE BARRIER.
21				0.390	WB OFF-RAMP TO CENTRAL Ave IN RICHMOND. RIGHT SHOULDER,
22				2.716	WB ON-RAMP FROM BARRETT Ave & SAN PABLO Ave. RIGHT SIDE, NEAR Beg OF RAMP AT BARRETT, CONNECTS TO CONCRETE BARRIER.
23				4.583	EB ON-RAMP FROM SAN PABLO DAM Rd, LEFT SHOULDER, CONNECTED TO CONCRETE BARRIER.
24				6.570	EB OFF-RAMP TO RICHMOND PARKWAY-FITZGERALD Dr, RIGHT SHOULDER.
25				6.856	WB OFF-RAMP TO RICHMOND PARKWAY, LEFT SHOULDER. CONNECTED TO CONCRETE BARRIER.
26				6.975	EB ON-RAMP FROM WB FITZGERALD-RICHMOND PARKWAY, LEFT SHOULDER.
27				8.397	WB ON-RAMP FROM PINOLE VALLEY Rd. RIGHT SHOULDER, AT PINOLE CREEK BRIDGE. CONNECTS TO CONCRETE BRIDGE BARRIER.
28				9.850	WB ON-RAMP FROM EB Rte 4 IN HERCULES. RIGHT SIDE, CONNECTED TO CONCRETE BRIDGE BARRIER.
28A				10.040	EB ON-RAMP FROM EB Rte 4 IN HERCULES. LEFT (1) & RIGHT (2) SIDES CONNECTED TO CONCRETE BRIDGE BARRIER.

LOCATIONS OF CONSTRUCTION

PROJECT WORK LOCATIONS No.	COUNTY	ROUTE	POST MILE PREFIX	PM	SITE DESCRIPTIONS
29	Ala	84	R	3.350	NB 800' WEST FROM OFF-RAMP TO THORNTON Ave IN FREMONT, AT CULVERT. RIGHT SHOULDER.
30				3.450	NB 300' WEST FROM OFF-RAMP TO THORNTON Ave IN FREMONT, AT OVERHEAD SIGN. RIGHT SHOULDER.
31				3.670	SB (WB) ON-RAMP FROM PASEO PADRE Pkwy (EB (SB) THORNTON Ave), LEFT SHOULDER.
32				3.747	THORNTON Ave OC, EB (SB). RIGHT SIDE, CONNECTED TO BRIDGE RAILING.
33				3.814, 3.965	SB (WB) ON-RAMP FROM WB (NB)THORNTON Ave AND PASEO PADRE PARKWAY. LEFT SIDE.
34				10.633	NILES JUNCTION UP (ON MOWRY) RR BRIDGE 33-53, RIGHT SIDE, NB (1) & SB (2), CONNECTED TO BRIDGE ABUTMENT.
35				10.633	NILES JUNCTION UP (ON MOWRY) RR BRIDGE 33-53, LEFT SIDE, NB (1) & SB (2), CONNECTED TO BRIDGE ABUTMENT.
36				10.713	EAST NILES UP (MOWRY,W OF MISSION) RR BRIDGE 33-30, RIGHT SIDE, EB (1) & WB (2), CONNECTED TO BRIDGE ABUTMENT.
37				10.713	EAST NILES UP (MOWRY,W OF MISSION) RR BRIDGE 33-30, LEFT SIDE, EB (1) & WB (2), CONNECTED TO BRIDGE ABUTMENT.
38	Ala	92		4.470	WB ON-RAMP FROM CLAWITER Rd, RIGHT SHOULDER. UNDER CLAWITER Rd OC, SHIELDING BRIDGE COLUMNS.
39				4.470	CLAWITER Rd OC, SB, APPROACHING CORNER. RIGHT SIDE.
40				5.001	WB ON-RAMP FROM INDUSTRIAL Blvd, RIGHT SHOULDER.
41	Ala	238		2.192	SB AT EDENVALE UP (600' SOUTH OF STEVENSON Blvd). ON RIGHT SHOULDER AT NORTH WINGWALL OF BRIDGE.
41A			R	14.033	NB (FOOTHILL Blvd) CONNECTOR TO WB 580 IN CASTRO VALLEY. LEFT SIDE, CONNECTED TO Conc BRIDGE (CASTRO VALLEY Blvd UC) BARRIER.
41B			R	14.470	SB LOOP CONNECTOR TO WB 580 IN CASTRO VALLEY. RIGHT SIDE, CONNECTED TO Conc BRIDGE (Rte 238 SEPARATION STRUCTURE) BARRIER.
42	CC	242	R	1.457	SB LOOP ON-RAMP FROM CONCORD Ave, ON LEFT AT BEGINNING (1), ON RIGHT AT Conc. BARRIER(2), & ON LEFT AT BRIDGE BARRIER (3).
43				1.499	NB LOOP ON-RAMP FROM EB CONCORD Ave, ON LEFT AT BEGINNING (1), AND ON RIGHT (2), & LEFT (3) AT CONCRETE BRIDGE BARRIERS.
43A				1.665	NB DIAGONAL ON-RAMP FROM WB CONCORD Ave, LEFT (1) AND RIGHT (2) SIDES, CONNECTED TO CONCRETE BARRIERS.
44				2.046	SB ON-RAMP FROM SOLANO WAY, RIGHT SHOULDER. CONNECTS TO CONCRETE BARRIER-SOUNDWALL.
45				2.274	NB ON-RAMP FROM GRANT St. LEFT SHOULDER,SHIELDING CAMERA POLE.
46				2.625	NB OFF-RAMP TO OLIVERA Rd, RIGHT SHOULDER, CONNECTED TO Conc. BARRIER.
47	Ala	260	R	0.893	NB WEBSTER St IN ALAMEDA, 800' SOUTH OF POSEY TUBE (33-106R) ENTRANCE. LEFT SIDE, UNDER SEP Str.
48				0.983	800' SOUTH OF END OF WEBSTER St TUBE (33-106L), SB LEFT SIDE, CONNECTS TO SEP Str CONCRETE BARRIER.
49				1.051	600' SOUTH OF END OF WEBSTER St. TUBE IN ALAMEDA, SB LEFT SHOULDER, SHIELDS OH SIGN POST.
50				1.124	NB WEBSTER St IN ALAMEDA, 350' SOUTH OF POSEY TUBE ENTRANCE, LEFT (1) AND RIGHT (2) SIDES, WITH STEEL END POSTS.

NOTE:

NUMBERS IN PARENTHESES DISTINGUISH SEPARATE RAILINGS AT LOCATIONS WITH MORE THAN ONE RAILING TO UPGRADE. SEE SUMMARY OF QUANTITIES.

LOCATIONS OF CONSTRUCTION

LC-1

REVISED BY | DATE REVISED | CALCULATED-DESIGNED BY | CHECKED BY

FUNCTIONAL SUPERVISOR: ALBERT J. ZEPEDA

STATE OF CALIFORNIA - DEPARTMENT OF TRANSPORTATION

Caltrans® DESIGN

LAST REVISION 04-13-12 | DATE PLOTTED => 04-JUN-2012 | TIME PLOTTED => 15:12

Dist	COUNTY	ROUTE	POST MILES TOTAL PROJECT	SHEET No.	TOTAL SHEETS
04	Ala,CC	4,80,84, 92,238,etc.	Var	3	141

Paul Snyder 4-11-12
REGISTERED CIVIL ENGINEER DATE

6-4-12
PLANS APPROVAL DATE

REGISTERED PROFESSIONAL ENGINEER Paul Alan Snyder No. 41128 Exp. 3-31-13 CIVIL STATE OF CALIFORNIA

THE STATE OF CALIFORNIA OR ITS OFFICERS OR AGENTS SHALL NOT BE RESPONSIBLE FOR THE ACCURACY OR COMPLETENESS OF SCANNED COPIES OF THIS PLAN SHEET.

LOCATIONS OF CONSTRUCTION

PROJECT WORK LOCATIONS No.	COUNTY	ROUTE	POST MILE PREFIX	POST MILE PM	SITE DESCRIPTIONS
51	Ala	580	R	5.933	NORTH FLYNN OC (CARROLL Rd), 3 MILES EAST OF LIVERMORE. RIGHT SIDE NB(1) & SB(2) AND LEFT SIDE NB(3) & SB(4) ALL CONNECTED TO BRIDGE BARRIER RAILINGS.
53				17.940	EB LOOP ON-RAMP FROM SB SANTA RITA-TASSAJARA Rd IN PLEASANTON. LEFT SIDE.
54				18.601	WB OFF-RAMP TO HACIENDA Dr IN DUBLIN. AT OH SIGN EAST OF OFF-RAMP (1) & ON LEFT (2) AND RIGHT (3) SIDES DOWN RAMP.
55				18.791	WB ON-RAMP FROM NB HACIENDA Dr IN PLEASANTON, LEFT SIDE.
56				18.851	EB ON-RAMP FROM SB HACIENDA Dr IN PLEASANTON, LEFT SIDE.
57				19.051	EB OFF-RAMP TO SB HACIENDA Dr IN PLEASANTON, RIGHT SIDE.
58				19.851	WB ON-RAMP FROM NB HOPYARD Rd IN DUBLIN-PLEASANTON. LEFT SIDE, CONNECTED TO CONCRETE BARRIER.
59				19.871	EB ON-RAMP FROM SB HOPYARD Rd LEFT SIDE, CONNECTED TO CONCRETE BARRIER.
60				20.591	WB LOOP CONNECTOR TO SB Rte 680 IN DUBLIN-PLEASANTON. RIGHT SIDE, CONNECTS TO CONCRETE BRIDGE BARRIER.
61			R	26.410	WB ON-RAMP FROM EDEN CANYON Rd IN CASTRO VALLEY, RIGHT SIDE.
62				28.270	EB ON-RAMP FROM NB GROVE WAY (CROW CANYON Rd) IN CASTRO VALLEY, RIGHT SIDE.
63				28.360	WB ON-RAMP FROM EAST CASTRO VALLEY Blvd, BOTH SIDES. AFTS AT BEGINNING ON LEFT SIDE(1). WBTR AT END ON RIGHT SIDE(2) CONNECTS TO Conc. BRIDGE BARRIER AT CROW CANYON Rd UC.
64				29.530	WB ON-RAMP FROM REDWOOD Rd Rt SIDE, CONNECTED TO CONCRETE BARRIER.
65			M	31.028	WB LOOP ON-RAMP FROM EB CASTRO VALLEY Blvd IN CASTRO VALLEY. RIGHT SIDE, CONNECTED TO Conc. BRIDGE (CASTRO VALLEY Blvd UC) BARRIER.
65A			M	31.029	WB ON-RAMP FROM NB FOOTHILL & EB CASTRO VALLEY Blvd. IN CASTRO VALLEY. Lf SIDE,CONNECTED TO Conc. BRIDGE (Rte 238 SEPARATION STRUCTURE) BARRIER.
66			R	31.961	EB OFF-RAMP TO 164th & MIRAMAR Ave (LIBERTY St) IN SAN LEANDRO. LEFT SIDE.
67				32.591	EB ON-RAMP FROM FAIRMONT Dr & FREEDOM Ave. LEFT SIDE, SOUTH OF PUMP BUILDING.
68				32.971	EB OFF-RAMP TO 150th Ave IN SAN LEANDRO, LEFT SIDE.
70				36.251	EB ON-RAMP FROM 98th Ave (SOUTH OF GOLF LINKS Rd) RIGHT SIDE, WAY DOWN RAMP.
71				37.621	EB ON-RAMP FROM FONTAINE St SOUTH OF KELLER Ave IN OAKLAND. RIGHT SIDE, CONNECTED TO RETAINING WALL.
72				37.931	WB ON-RAMP FROM MOUNTAIN Blvd, NORTH OF KELLER Ave IN OAKLAND. LEFT SIDE.
73				39.061	WB CONNECTOR TO NB Rte 13. LEFT(1) AND RIGHT(2) SIDES. LEFT SIDE CONNECTED TO BRIDGE ABUTMENT.
74				38.281	WB ON-RAMP FROM MOUNTAIN Blvd AT RUSTING Ave NEAR Rte 13-580 SPLIT, RIGHT SIDE. CONNECTS TO BRIDGE RAIL.
75				40.971	EB ON-RAMP FROM COOLIDGE Ave, RIGHT SHOULDER. CONNECTED TO CONCRETE BRIDGE BARRIER.
76				41.731	WB ON-RAMP FROM FRUITVALE Ave, MONTANA St AND DIMOND Ave, TWO RAILINGS ON RIGHT SIDE. EAST RAIL (1) AT BEGINNING OF RAMP. WEST RAIL (2) CONNECTS TO SHEFFIELD Ave OC WINGWALL.
77				42.031	EB ON-RAMP FROM BEAUMONT Ave & MacARTHUR Blvd. LEFT (1) AND RIGHT (2) SIDES. CONNECT TO CONCRETE BRIDGE BARRIERS.
78				42.901	EB OFF-RAMP TO PARK Blvd, LEFT(1) & RIGHT(2) SIDES. RIGHT SIDE CONNECTS TO TYPE 50 CONCRETE BARRIER.
79				43.761	EB OFF-RAMP TO GRAND Ave (MacARTHUR Blvd). RIGHT SIDE.
80				44.307	WB ON-RAMP FROM OAKLAND Ave, RIGHT SIDE. CONNECTED TO TYPE 2 BARRIER RAILING.
81				44.308	WB ON-RAMP FROM HARRISON St, LEFT(1) & RIGHT(2) SIDES. LEFT SIDE CONNECTED TO TYPE 2 BARRIER RAILING.
82				44.433	EB OFF-RAMP TO OAKLAND Ave, LEFT SIDE (1) AND MIDDLE GORE (2) CONNECT TO BRIDGE RAILINGS.

LOCATIONS OF CONSTRUCTION

PROJECT WORK LOCATIONS No.	COUNTY	ROUTE	POST MILE PREFIX	POST MILE PM	SITE DESCRIPTIONS
83	CC	580	R	0.086	WB OFF-RAMP TO CENTRAL Ave IN RICHMOND. RIGHT SHOULDER, ATTACHED TO CONCRETE BARRIER.
84				0.116	EB ON-RAMP FROM CENTRAL Ave. RIGHT SIDE. NORTH(1), NEAR BEGINNING OR RAMP. SOUTH(2) CONNECTED TO CONCRETE BARRIER.
85				1.000	WB OFF-RAMP TO BAYVIEW Ave. LEFT(1) & RIGHT(2) SIDES, ATTACHED TO Conc. BARRIERS.
86				2.930	EB ON-RAMP FROM NB MARINA BAY Pkwy AT SOUTH 23rd St IN RICHMOND. LEFT SHOULDER.
87				3.400	WB OFF-RAMP TO NB HARBOUR WAY. LEFT SHOULDER.
88				4.504	EB ON-RAMP FROM CANAL Blvd. RIGHT SIDE, CONNECTED TO BRIDGE RAILING (S. 2nd St OH, 28-0277)
89				5.128	WB ON-RAMP FROM CASTRO St. RIGHT SHOULDER, ATTACHED TO Conc. BRIDGE BARRIER AT CASTRO St. UC.
90				5.504	EB ON-RAMP FROM CASTRO St. RIGHT SHOULDER, BEFORE OH SIGN SIDE (CANAL Blvd) CONNECTED TO Conc. BRIDGE BARRIER.
91				5.847	EB ON-RAMP FROM WESTERN Dr. LEFT SIDE.
92	Ala	680	R	8.312	SHERIDAN Rd OC 33-307, WB APPROACHING CORNER, RIGHT SIDE, CONNECTED TO Conc. BRIDGE BARRIER.
93				15.251	SB LOOP ON-RAMP FROM SUNOL Blvd. LEFT(1) & RIGHT(2) SIDES. CONNECT TO Conc. BRIDGE BARRIERS.
94				18.396	EB WEST Los POSITAS Blvd OC, BRIDGE No. 33-516, SW CORNER ONLY, CONNECTED TO CONCRETE BRIDGE BARRIER. RIGHT SIDE.
95				19.041	NB OFF-RAMP TO STONERIDGE Dr. ON RIGHT NEAR BEGINNING(1) AND ON LEFT(2) & RIGHT(3) SIDES CONNECTED TO CONCRETE BARRIERS.
96				19.261	NB LOOP ON-RAMP FROM EB STONERIDGE Dr. LEFT (1) & RIGHT (2) SIDES, CONNECTED TO Conc. BRIDGE BARRIERS.
97				19.351	SB LOOP ON-RAMP FROM STONERIDGE Dr. LEFT SIDE. NEAR BEGINNING (1) & AT DRAINAGE CHANNEL (2)
98				19.300	EB STONERIDGE Dr OC, (Br No.33-507), EB RIGHT SIDE, AT SW CORNER, CONNECTS TO Conc. BARRIER.
99				19.511	SB OFF-RAMP TO STONERIDGE Dr. LEFT SHOULDER.
100	CC	680	R	2.885	WB BOLLINGER CANYON Rd OC (Br No. 28-224). RIGHT SIDE, AT NE CORNER, CONNECTS TO CONCRETE BRIDGE BARRIER.
101				3.765	EB NORRIS CANYON Rd OC (Br No. 28-205), RIGHT SIDE AT SW CORNER, CONNECTS TO CONCRETE BRIDGE BARRIER.
102				4.182	CROW CANYON Rd OC (Br No. 28-206), WB APPROACHING CORNER. CONNECTS TO CONCRETE BRIDGE BARRIER.
103				4.182	CROW CANYON Rd OC (Br No. 28-206), EB APPROACHING CORNER, CONNECTS TO CONCRETE BRIDGE BARRIER.
104				4.464	FOSTORIA WAY OC/SAN RAMON CREEK OC (Br No. 28-316/57) RIGHT SIDE, WB CONNECTS TO CONCRETE BRIDGE BARRIER.
105				12.456	EB RUDGEAR Rd UC, APPROACHING CORNER, ATTACH TO TYPE 50 CONCRETE BARRIER.
106				13.693	SB LOOP ON-RAMP FROM OLYMPIC Blvd, IN WALNUT CREEK. RIGHT SHOULDER, CONNECT TO CONCRETE BRIDGE BARRIER.
107				15.522	NB LOOP OFF-RAMP NORTH MAIN St OC (Br No. 28-119), IN WALNUT CREEK. RIGHT SIDE, ALONG PENNIMAN WAY.
108				15.639	SB LOOP OFF-RAMP TO SB NORTH MAIN St OC (Br No. 28-119), IN WALNUT CREEK. ATTACHED TO CONCRETE BRIDGE BARRIER.

LOCATIONS OF CONSTRUCTION

LC-2

REVISED BY	DATE REVISED
-	-
-	-

CALCULATED-DESIGNED BY | CHECKED BY

FUNCTIONAL SUPERVISOR: ALBERT J. ZEPEDA

STATE OF CALIFORNIA - DEPARTMENT OF TRANSPORTATION

Caltrans® DESIGN

LAST REVISION 10-19-11 | DATE PLOTTED => 04-JUN-2012 | TIME PLOTTED => 15:13

Dist	COUNTY	ROUTE	POST MILES TOTAL PROJECT	SHEET No.	TOTAL SHEETS
04	Ala,CC	4,80,84, 92,238,etc.	Var	4	141

Paul Snyder 4-11-12
REGISTERED CIVIL ENGINEER DATE

6-4-12
PLANS APPROVAL DATE

REGISTERED PROFESSIONAL ENGINEER Paul Alan Snyder No. 41128 Exp. 3-31-13 CIVIL STATE OF CALIFORNIA

THE STATE OF CALIFORNIA OR ITS OFFICERS OR AGENTS SHALL NOT BE RESPONSIBLE FOR THE ACCURACY OR COMPLETENESS OF SCANNED COPIES OF THIS PLAN SHEET.

LOCATIONS OF CONSTRUCTION

PROJECT WORK LOCATIONS No.	COUNTY	ROUTE	POST MILE PREFIX	PM	SITE DESCRIPTIONS
109	CC	680	R	15.883	SB OFF-RAMP TO NORTH MAIN St & SAN LUIS Rd, RIGHT SHOULDER, CONNECTED TO CONCRETE BARRIER.
110				16.171	NB OFF-RAMP TO TREAT Blvd, IN WALNUT CREEK. LEFT SHOULDER, CONNECTED TO CONCRETE BARRIER.
111				16.706	SB OFF-RAMP TO TREAT Blvd & GEARY Rd (N. MAIN St). LEFT SHOULDER, ATTACHED TO TYPE 50C CONCRETE BARRIER.
112				17.954	SB OFF-RAMP TO MONUMENT Blvd IN PLEASANT HILL. RIGHT SIDE, AT OVERHEAD SIGN POST.
113				19.094	SB ON-RAMP FROM WB WILLOW PASS Rd. RIGHT SHOULDER, CONNECTED TO CONCRETE BRIDGE BARRIER.
114				19.183	SB OFF-RAMP TO WB WILLOW PASS Rd. RIGHT SHOULDER, CONNECTED TO TYPE 50 CONCRETE BARRIER.
115				22.283	NB OFF-RAMP TO PACHECO Blvd. SOUTH ON RIGHT AT CULVERT(1) AND RIGHT (2) & LEFT (3) SIDES AT Br No. 28-169S, CONNECTED TO BRIDGE BARRIER.
116				22.830	NB ON-RAMP FROM ARTHUR Rd, EAST OF MARTINEZ. RIGHT SHOULDER, BEFORE SOUNDWALL.
117	Ala	880		3.181	SB OFF-RAMP TO FREMONT Blvd & CUSHING Pkwy, LEFT (1) AND RIGHT (2) SIDES. RIGHT CONNECTED TO CONCRETE BARRIER.
118				3.191	NB OFF-RAMP TO FREMONT/CUSHING Pkwy, IN FREMONT. LEFT SHOULDER.
119				3.191	NB OFF-RAMP TO FREMONT/CUSHING Pkwy, RIGHT SHOULDER. CONNECTED TO CONCRETE BARRIER.
120				3.240	NB LOOP ON-RAMP FROM EB FREMONT Blvd, IN FREMONT. LEFT SHOULDER, CONNECTED TO CONCRETE BARRIER.
121				3.261	SB LOOP ON-RAMP FROM SB (WB) FREMONT Blvd. LEFT SHOULDER.
122				3.741	NB OFF-RAMP TO TRUCK SCALE, RIGHT SHOULDER.
123				3.802	SB ON-RAMP FROM TRUCK SCALE, LEFT SIDE, AT OVERHEAD SIGNALS STRUCTURE.
124				4.221	SB OFF-RAMP TO TRUCK SCALE, LEFT(1) & RIGHT(2) SIDES, AT OVERHEAD SIGN STRUCTURE.
125				4.714	AUTO MALL Pkwy OC IN FREMONT. EB, RIGHT SHOULDER, CONNECTED TO CONCRETE BRIDGE BARRIER.
126				6.444	SB OFF-RAMP TO STEVENSON Blvd. LEFT SIDE, DOUBLE THRIE BEAM BARRIER.
127				6.444	SB OFF-RAMP TO STEVENSON Blvd. RIGHT SIDE, CONNECTED TO CONCRETE BARRIER 2/3 WAY DOWN RAMP.
128				7.017	NB OFF-RAMP TO MOWRY Ave. LEFT (1) & RIGHT (2) SIDES.
129				7.032	SB ON-RAMP FROM EB MOWRY Ave. RIGHT SHOULDER.
130				7.390	SB OFF-RAMP TO MOWRY Ave. LEFT SHOULDER.
131				8.645	SB ON-RAMP FROM EB THORNTON Ave. RIGHT SHOULDER AT METERING LIGHTS.
132				9.025	SB OFF-RAMP TO THORNTON Ave. LEFT SHOULDER.
133				10.150	NB OFF-RAMP TO DECOTO Rd. RIGHT SHOULDER, CONNECTED TO Conc. BARRIER.
134				11.671	SB LOOP ON-RAMP FROM WB ALVARADO-FREMONT Blvd, DOUBLE MBGR. LEFT SIDE
135				12.871	SB LOOP ON-RAMP FROM WB ALVARADO NILES Rd. Lf SHOULDER, CONNECTED TO Conc. BARRIER.
136				13.240	SB OFF-RAMP TO ALVARADO NILES Rd. LEFT (1) & RIGHT (2) SIDES, CONNECTED TO Conc. BARRIERS.
137				13.554	SB ON-RAMP FROM WHIPPLE Rd. LEFT SHOULDER.
138				13.724	SB OFF-RAMP TO WHIPPLE Rd. LEFT SHOULDER, CONNECTED TO Conc. BARRIER.
139				13.765	NB ON-RAMP FROM WB WHIPPLE Rd. RIGHT SHOULDER, CONNECTED TO Conc. BARRIER.
140				14.722	SB OFF-RAMP TO INDUSTRIAL Pkwy WEST, RIGHT SHOULDER AT OVERHEAD SIGN AT NORTH END OF RAMP.
141				15.549	SB ON-RAMP FROM WB TENNYSON Rd IN HAYWARD. RIGHT SHOULDER, CONNECTED TO BRIDGE WINGWALL.

LOCATIONS OF CONSTRUCTION

PROJECT WORK LOCATIONS No.	COUNTY	ROUTE	POST MILE PREFIX	PM	SITE DESCRIPTIONS
142	Ala	880		15.748	NB ON-RAMP FROM EB TENNYSON Rd IN HAYWARD. RIGHT SHOULDER, CONNECTED TO BRIDGE WINGWALL.
144				17.724	NB ON-RAMP FROM WB WINTON Ave IN HAYWARD. RIGHT SHOULDER,
145				18.228	NB OFF-RAMP TO A St IN HAYWARD. LEFT SHOULDER, CONNECTED TO Conc. BARRIER/RETAINING WALL.
146				18.482	SB OFF-RAMP TO A St IN HAYWARD. LEFT SHOULDER, CONNECTED TO Conc. BARRIER/RETAINING WALL.
148				20.686	NB OFF-RAMP TO WASHINGTON Ave, LEFT SHOULDER, CONNECTED TO BRIDGE RAILING.
149				20.818	WASHINGTON Ave OC. EB (NB) RIGHT SIDE, CONNECTED TO BRIDGE RAILING.
150				20.820	NB ON-RAMP FROM WASHINGTON Ave. RIGHT SHOULDER, SHIELDING WASHINGTON Ave OC BRIDGE COLUMNS.
151				20.821	LOOP ON-RAMP TO SB 880 & SB(EB) Rte 238 FROM WASHINGTON Ave. RIGHT SHOULDER, SHIELDING BRIDGE COLUMNS.
152				20.902	SB OFF-RAMP CONNECTOR TO SB RtE 238. LEFT SIDE, IN MEDIAN, SHIELDING OH SIGN STRUCTURE.
153				20.902	SB OFF-RAMP CONNECTOR TO SB Rte 238, LEFT SHOULDER, SHIELDING BRIDGE COLUMNS.
154				21.556	FLORESTA Blvd OC, WB, RIGHT (NORTH) SIDE BRIDGE APPROACH, CONNECTED TO CONCRETE BRIDGE BARRIER.
155				22.837	MARINA Blvd OC, WB, RIGHT (NORTH) SIDE, CONNECTED TO TYPE 1 BRIDGE BARRIER.
156				22.720	NB OFF-RAMP TO EB MARINA Blvd IN SAN LEANDRO. LEFT SHOULDER.
157				22.946	NB ON-RAMP FROM WB MARINA Blvd IN SAN LEANDRO. RIGHT SHOULDER, CONNECTED TO CONCRETE BARRIER.
158				23.709	SB ON-RAMP FROM WB DAVIS St. RIGHT SHOULDER.
159				24.731	SB ON-RAMP FROM EB 98th Ave IN OAKLAND. LEFT SHOULDER, CONNECTS TO CONCRETE BARRIER.
160				24.851	SB OFF-RAMP TO 98th Ave IN OAKLAND. LEFT SHOULDER.
161				25.522	NB ON-RAMP FROM EB(NB) HEGENBERGER IN OAKLAND. LEFT SHOULDER.
162				26.481	NB OFF-RAMP TO COLISEUM Wy & 66th Ave. LEFT (1) & RIGHT (2) SIDES, CONNECTED TO TYPE 2 CONCRETE BRIDGE BARRIERS.
163				26.482	NB ON-RAMP FROM COLISEUM WAY. LEFT (1) & RIGHT (2) SIDES, CONNECTED TO TYPE 2 Conc BRIDGE BARRIERS.
164				26.581	SB ON-RAMP FROM EB 66th Ave-Zhone Wy. RIGHT SIDE, CONNECT TO METAL BALLUSTER BRIDGE BARRIER.
165				26.701	NB ON RAMP FROM WB 66th Ave, RIGHT SIDE OF RAMP (1). RIGHT SIDE OF WB 66th Ave OC & LEFT SIDE OF RAMP (2), CONNECTED TO Conc BARRIER.
166				29.101	NB ON-RAMP FROM EB (NB) 23rd Ave. LEFT (1) AND RIGHT (2) SHOULDERS, CONNECTED TO Conc BARRIERS.
167	Ala	980		0.562	NB (EB) OFF-RAMP TO 17th St & SAN PABLO Ave (CASTRO St). 3 RAILINGS: (1) NEAR BEGINNING OF RAMP ON RIGHT AT OH EXIT SIGN, (2) ON LEFT UNDER ON-RAMP BRIDGE 200' NORTH OF 12th St, (3) ON LEFT NEAR RAMP END (SOUTH OF 17th St)
168				1.029	WB(SB) OFF-RAMP TO BRUSH AND 18th St. LEFT SHOULDER.

LOCATIONS OF CONSTRUCTION

LC-3

STATE OF CALIFORNIA - DEPARTMENT OF TRANSPORTATION
Caltrans DESIGN
FUNCTIONAL SUPERVISOR ALBERT J. ZEPEDA
CALCULATED-DESIGNED BY | CHECKED BY
REVISED BY | DATE REVISED

LAST REVISION 04-11-12 | DATE PLOTTED => 04-JUN-2012 | TIME PLOTTED => 15:13

Dist	COUNTY	ROUTE	POST MILES TOTAL PROJECT	SHEET No.	TOTAL SHEETS
04	Ala,CC	4,80,84, 92,238,etc.	Var	5	141

Paul Snyder 4-11-12
REGISTERED CIVIL ENGINEER DATE

6-4-12
PLANS APPROVAL DATE

REGISTERED PROFESSIONAL ENGINEER Paul Alan Snyder No. 41128 Exp. 3-31-13 CIVIL STATE OF CALIFORNIA

THE STATE OF CALIFORNIA OR ITS OFFICERS OR AGENTS SHALL NOT BE RESPONSIBLE FOR THE ACCURACY OR COMPLETENESS OF SCANNED COPIES OF THIS PLAN SHEET.

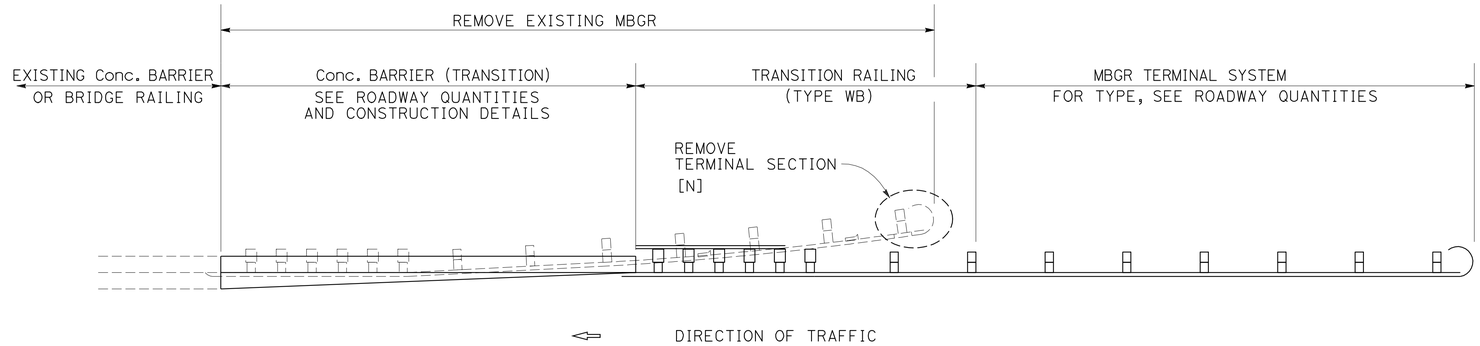

TYPICAL LAYOUT DETAIL 1

POST-SKIPPING DETAIL (1)

NOTES:

1. [N] NOT A SEPARATE PAY ITEM. FOR INFORMATION ONLY.
2. OMITTED POST DETAILS TO BE USED WITH CONVENTIONAL MBGR ONLY. NOT TO BE USED ON TERMINAL SYSTEMS OR TRANSITION RAILING (TYPE WB)
3. USE CASE 1 OR CASE 2 WHEN ONE POST IS OMITTED.
4. FOR OTHER DETAILS, SEE STANDARD PLANS A77A, A77B AND A77C.
5. USE AT LOCATION WHERE THERE ARE UNDERGROUND UTILITY CONFLICTS.

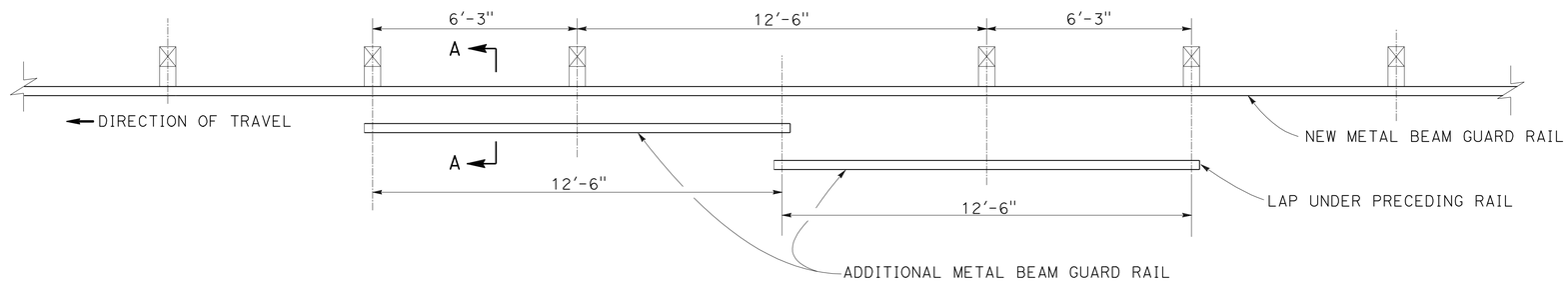

CASE 1
ONE POST OMITTED (SPLICE IN CENTER)

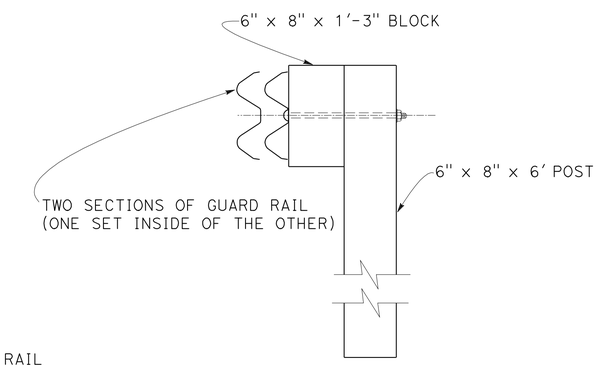

SECTION A-A

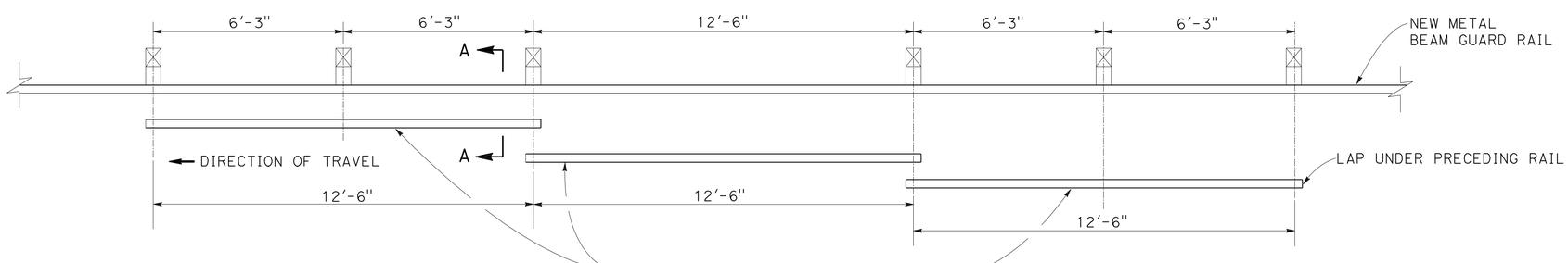

CASE 2
ONE POST OMITTED (SPLICE AT POSTS)

CONSTRUCTION DETAILS

NO SCALE

C-1

STATE OF CALIFORNIA - DEPARTMENT OF TRANSPORTATION
Caltrans® DESIGN
FUNCTIONAL SUPERVISOR: ALBERT J. ZEPEDA
CALCULATED-DESIGNED BY | CHECKED BY
REVISED BY | DATE REVISED

LAST REVISION 04-11-12 | DATE PLOTTED => 04-JUN-2012 | TIME PLOTTED => 15:13

Dist	COUNTY	ROUTE	POST MILES TOTAL PROJECT	SHEET No.	TOTAL SHEETS
04	Ala,CC	4,80,84, 92,238,etc.	Var	6	141

Paul Snyder 4-11-12
REGISTERED CIVIL ENGINEER DATE

6-4-12
PLANS APPROVAL DATE

REGISTERED PROFESSIONAL ENGINEER
Paul Alan Snyder
No. 41128
Exp. 3-31-13
CIVIL
STATE OF CALIFORNIA

THE STATE OF CALIFORNIA OR ITS OFFICERS OR AGENTS SHALL NOT BE RESPONSIBLE FOR THE ACCURACY OR COMPLETENESS OF SCANNED COPIES OF THIS PLAN SHEET.

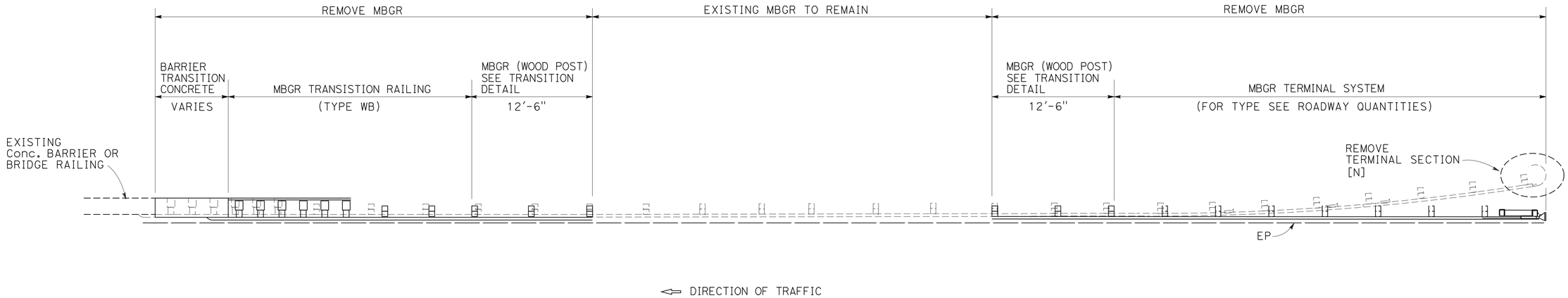

TYPICAL LAYOUT DETAIL 2

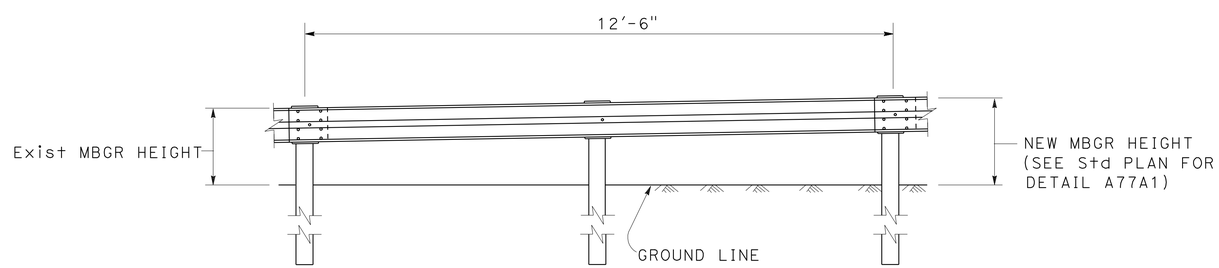

TRANSITION DETAIL

CONSTRUCTION DETAILS
NO SCALE

C-2

STATE OF CALIFORNIA - DEPARTMENT OF TRANSPORTATION
Caltrans
DESIGN
FUNCTIONAL SUPERVISOR
ALBERT J. ZEPEDA
CALCULATED-DESIGNED BY
CHECKED BY
REVISED BY
DATE REVISED

LAST REVISION 04-11-12
DATE PLOTTED => 04-JUN-2012
TIME PLOTTED => 15:13

Dist	COUNTY	ROUTE	POST MILES TOTAL PROJECT	SHEET No.	TOTAL SHEETS
04	Ala,CC	4,80,84, 92,238,etc.	Var	7	141

Paul Snyder 4-11-12
REGISTERED CIVIL ENGINEER DATE

6-4-12
PLANS APPROVAL DATE

REGISTERED PROFESSIONAL ENGINEER
Paul Alan Snyder
No. 41128
Exp. 3-31-13
CIVIL
STATE OF CALIFORNIA

THE STATE OF CALIFORNIA OR ITS OFFICERS OR AGENTS SHALL NOT BE RESPONSIBLE FOR THE ACCURACY OR COMPLETENESS OF SCANNED COPIES OF THIS PLAN SHEET.

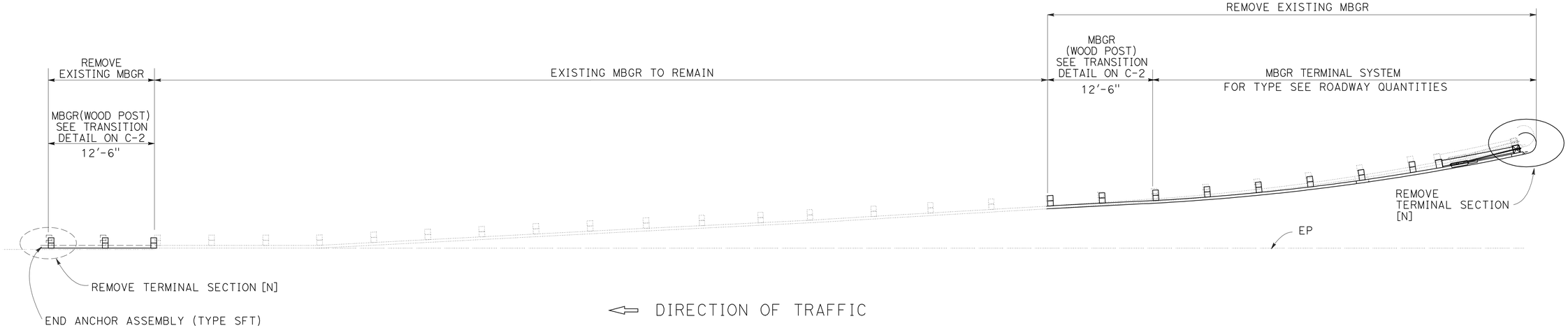

TYPICAL LAYOUT DETAIL 3

CONSTRUCTION DETAILS
NO SCALE

C-3

REVISED BY	DATE REVISED
-	-
-	-

CALCULATED-DESIGNED BY
CHECKED BY
FUNCTIONAL SUPERVISOR
ALBERT J. ZEPEDA

STATE OF CALIFORNIA - DEPARTMENT OF TRANSPORTATION
Caltrans
DESIGN

LAST REVISION 04-13-12 | DATE PLOTTED => 04-JUN-2012 | TIME PLOTTED => 15:13

Dist	COUNTY	ROUTE	POST MILES TOTAL PROJECT	SHEET No.	TOTAL SHEETS
04	Ala,CC	4,80,84, 92,238,etc.	Var	8	141

Paul Snyder
REGISTERED CIVIL ENGINEER DATE

6-4-12
PLANS APPROVAL DATE

REGISTERED PROFESSIONAL ENGINEER
Paul Alan Snyder
No. 41128
Exp. 3-31-13
CIVIL
STATE OF CALIFORNIA

THE STATE OF CALIFORNIA OR ITS OFFICERS OR AGENTS SHALL NOT BE RESPONSIBLE FOR THE ACCURACY OR COMPLETENESS OF SCANNED COPIES OF THIS PLAN SHEET.

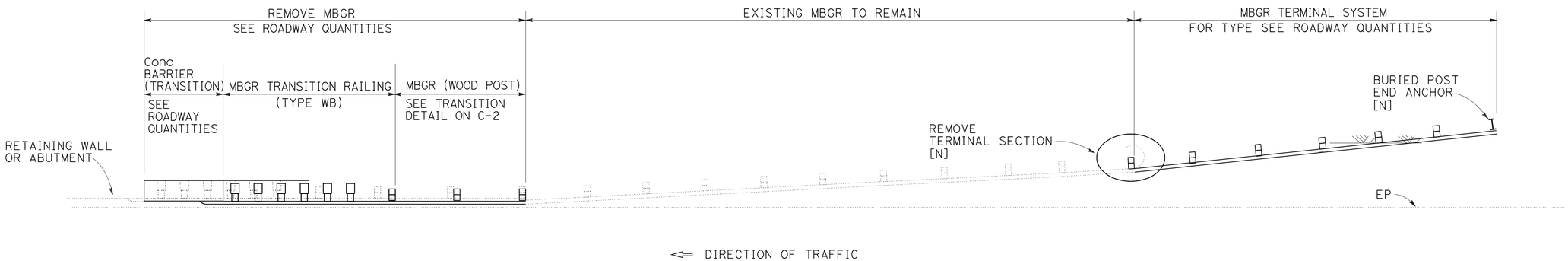

TYPICAL LAYOUT DETAIL 4

FOR LOCATIONS 10(1), 34(2) AND 36(2)

CONSTRUCTION DETAILS

NO SCALE

C-4

STATE OF CALIFORNIA - DEPARTMENT OF TRANSPORTATION
Caltrans
DESIGN

FUNCTIONAL SUPERVISOR: ALBERT J. ZEPEDA

CALCULATED-DESIGNED BY | CHECKED BY

REVISED BY | DATE REVISED

LAST REVISION 04-13-12 | DATE PLOTTED => 05-JUN-2012 | TIME PLOTTED => 08:25

Dist	COUNTY	ROUTE	POST MILES TOTAL PROJECT	SHEET No.	TOTAL SHEETS
04	Ala,CC	4,80,84, 92,238,etc.	Var	9	141

Paul Snyder 4-11-12
REGISTERED CIVIL ENGINEER DATE

6-4-12
PLANS APPROVAL DATE

REGISTERED PROFESSIONAL ENGINEER
Paul Alan Snyder
No. 41128
Exp. 3-31-13
CIVIL
STATE OF CALIFORNIA

THE STATE OF CALIFORNIA OR ITS OFFICERS OR AGENTS SHALL NOT BE RESPONSIBLE FOR THE ACCURACY OR COMPLETENESS OF SCANNED COPIES OF THIS PLAN SHEET.

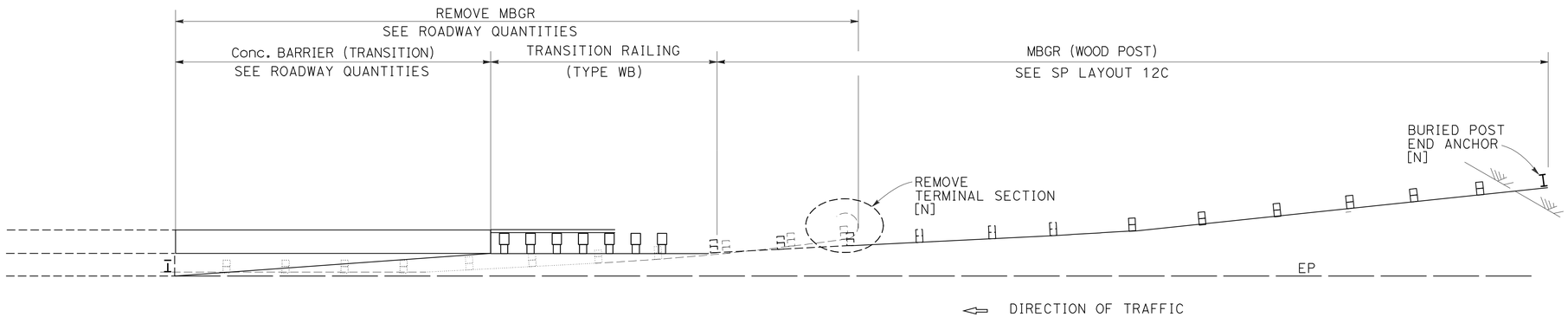

TYPICAL LAYOUT DETAIL 5
FOR LOCATION 76(2) AND 78(2)

CONSTRUCTION DETAILS
NO SCALE

C-5

STATE OF CALIFORNIA - DEPARTMENT OF TRANSPORTATION
Caltrans
DESIGN

FUNCTIONAL SUPERVISOR: ALBERT J. ZEPEDA

CALCULATED-DESIGNED BY: -
CHECKED BY: -
REVISED BY: -
DATE REVISED: -

LAST REVISION 04-13-12
DATE PLOTTED => 05-JUN-2012
TIME PLOTTED => 08:25

Dist	COUNTY	ROUTE	POST MILES TOTAL PROJECT	SHEET No.	TOTAL SHEETS
04	Ala,CC	4,80,84, 92,238,etc.	Var	10	141

Paul Snyder 4-11-12
REGISTERED CIVIL ENGINEER DATE

6-4-12
PLANS APPROVAL DATE

REGISTERED PROFESSIONAL ENGINEER
Paul Alan Snyder
No. 41128
Exp. 3-31-13
CIVIL
STATE OF CALIFORNIA

THE STATE OF CALIFORNIA OR ITS OFFICERS OR AGENTS SHALL NOT BE RESPONSIBLE FOR THE ACCURACY OR COMPLETENESS OF SCANNED COPIES OF THIS PLAN SHEET.

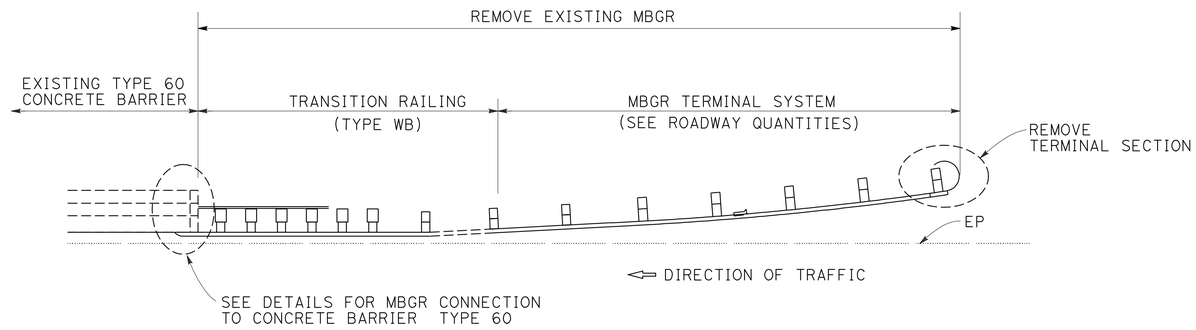

TYPICAL LAYOUT DETAIL 6
FOR LOCATION 6, 14 (1) AND 84 (2)

CONSTRUCTION DETAILS
NO SCALE

C-6

STATE OF CALIFORNIA - DEPARTMENT OF TRANSPORTATION
Caltrans DESIGN

FUNCTIONAL SUPERVISOR: ALBERT J. ZEPEDA

CALCULATED-DESIGNED BY: -
CHECKED BY: -

REVISED BY: -
DATE REVISED: -

LAST REVISION 04-09-12 | DATE PLOTTED => 04-JUN-2012 | TIME PLOTTED => 15:13

Dist	COUNTY	ROUTE	POST MILES TOTAL PROJECT	SHEET No.	TOTAL SHEETS
04	Ala,CC	4,80,84, 92,238,etc.	Var	11	141

Paul Snyder 4-11-12
REGISTERED CIVIL ENGINEER DATE

6-4-12
PLANS APPROVAL DATE

REGISTERED PROFESSIONAL ENGINEER
Paul Alan Snyder
No. 41128
Exp. 3-31-13
CIVIL
STATE OF CALIFORNIA

THE STATE OF CALIFORNIA OR ITS OFFICERS OR AGENTS SHALL NOT BE RESPONSIBLE FOR THE ACCURACY OR COMPLETENESS OF SCANNED COPIES OF THIS PLAN SHEET.

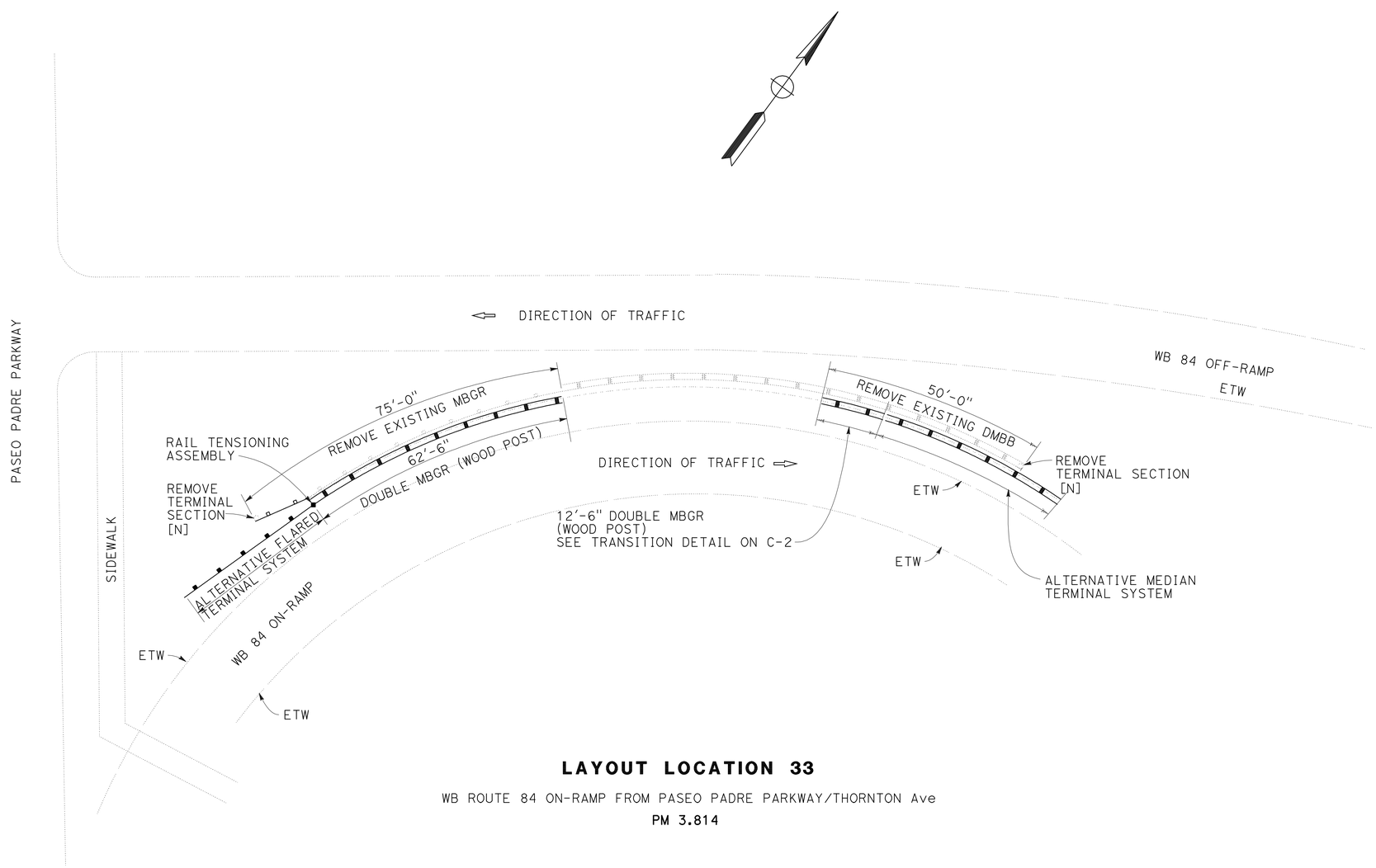

LAYOUT LOCATION 33

WB ROUTE 84 ON-RAMP FROM PASEO PADRE PARKWAY/THORNTON Ave

PM 3.814

CONSTRUCTION DETAILS

NO SCALE

C-7

REVISED BY	DATE REVISED
-	-

CALCULATED-DESIGNED BY	CHECKED BY
-	-

FUNCTIONAL SUPERVISOR: ALBERT J. ZEPEDA

STATE OF CALIFORNIA - DEPARTMENT OF TRANSPORTATION

Caltrans®

DESIGN

LAST REVISION 04-13-12 | DATE PLOTTED => 04-JUN-2012 | TIME PLOTTED => 15:13

Dist	COUNTY	ROUTE	POST MILES TOTAL PROJECT	SHEET No.	TOTAL SHEETS
04	Ala,CC	4,80,84, 92,238,etc.	Var	12	141

Paul Snyder 4-11-12
REGISTERED CIVIL ENGINEER DATE

6-4-12
PLANS APPROVAL DATE

REGISTERED PROFESSIONAL ENGINEER
Paul Alan Snyder
No. 41128
Exp. 3-31-13
CIVIL
STATE OF CALIFORNIA

THE STATE OF CALIFORNIA OR ITS OFFICERS OR AGENTS SHALL NOT BE RESPONSIBLE FOR THE ACCURACY OR COMPLETENESS OF SCANNED COPIES OF THIS PLAN SHEET.

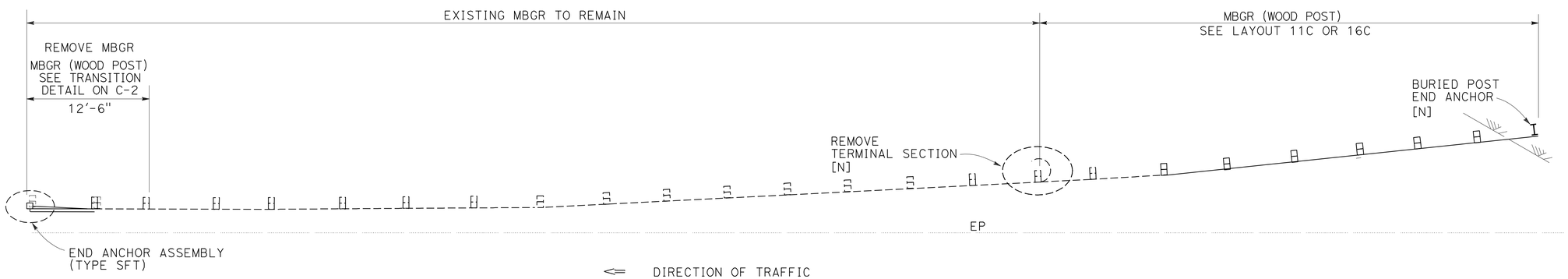

LAYOUT LOCATION 38

CONSTRUCTION DETAILS

NO SCALE

C-8

STATE OF CALIFORNIA - DEPARTMENT OF TRANSPORTATION
Caltrans®
DESIGN

FUNCTIONAL SUPERVISOR: ALBERT J. ZEPEDA

CALCULATED-DESIGNED BY | CHECKED BY

REVISED BY | DATE REVISED

LAST REVISION 4-13-12 | DATE PLOTTED => 04-JUN-2012 | TIME PLOTTED => 15:13

Dist	COUNTY	ROUTE	POST MILES TOTAL PROJECT	SHEET No.	TOTAL SHEETS
04	Ala,CC	4,80,84, 92,238,etc.	Var	13	141

Paul Snyder 4-11-12
REGISTERED CIVIL ENGINEER DATE

6-4-12
PLANS APPROVAL DATE

REGISTERED PROFESSIONAL ENGINEER
Paul Alan Snyder
No. 41128
Exp. 3-31-13
CIVIL
STATE OF CALIFORNIA

THE STATE OF CALIFORNIA OR ITS OFFICERS OR AGENTS SHALL NOT BE RESPONSIBLE FOR THE ACCURACY OR COMPLETENESS OF SCANNED COPIES OF THIS PLAN SHEET.

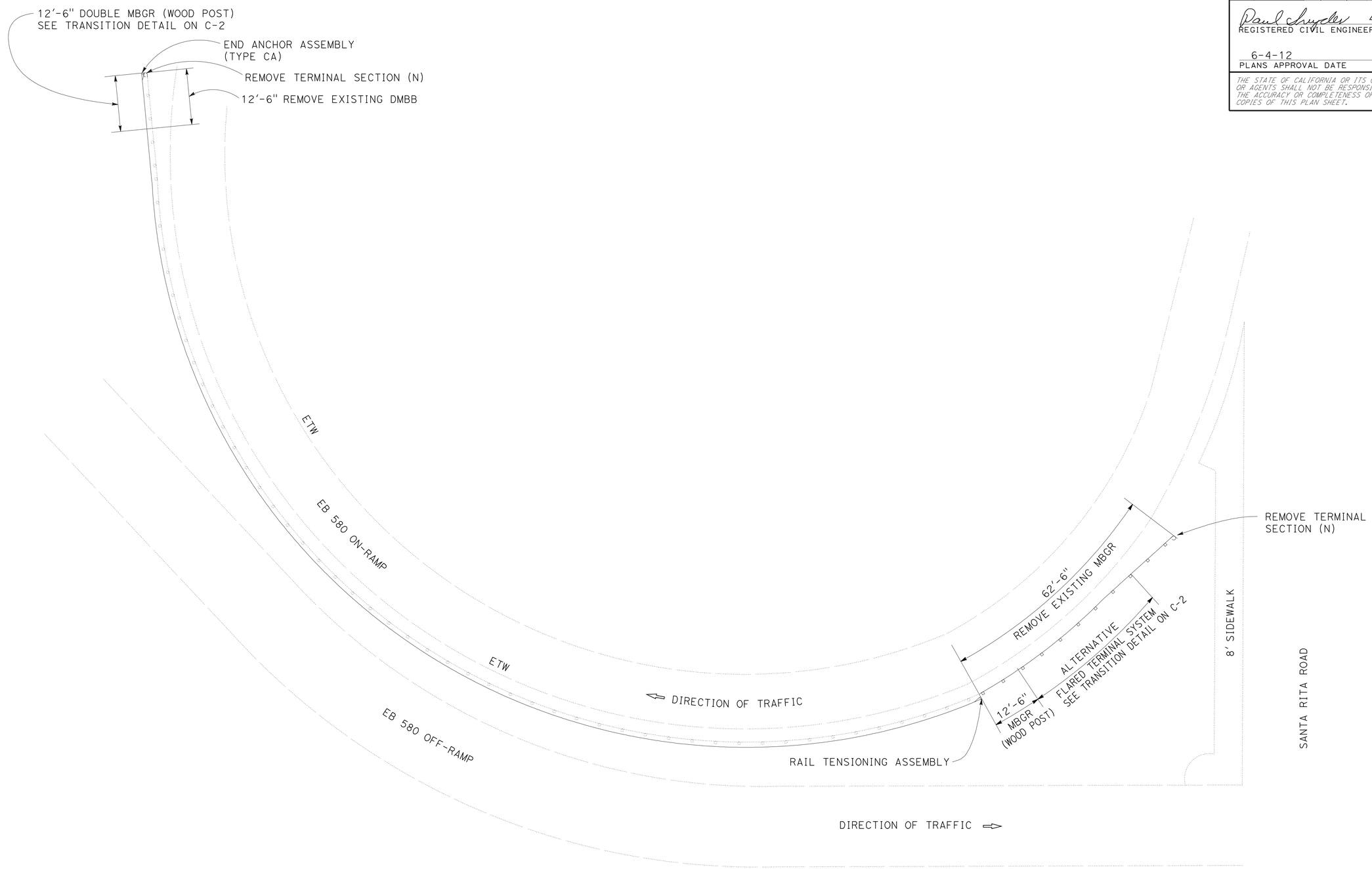

LAYOUT LOCATION 53

EB ROUTE 580 ON-RAMP FROM SB SANTA RITA-TASSAJARA ROAD

PM 17.94

CONSTRUCTION DETAILS

NO SCALE

C-9

STATE OF CALIFORNIA - DEPARTMENT OF TRANSPORTATION
Caltrans®
DESIGN

FUNCTIONAL SUPERVISOR: ALBERT J. ZEPEDA

CALCULATED-DESIGNED BY | CHECKED BY

REVISED BY | DATE REVISED

LAST REVISION 04-13-12 | DATE PLOTTED => 04-JUN-2012 | TIME PLOTTED => 15:13

Dist	COUNTY	ROUTE	POST MILES TOTAL PROJECT	SHEET No.	TOTAL SHEETS
04	Ala,CC	4,80,84, 92,238,etc.	Var	14	141

Paul Snyder 4-11-12
REGISTERED CIVIL ENGINEER DATE

6-4-12
PLANS APPROVAL DATE

REGISTERED PROFESSIONAL ENGINEER
Paul Alan Snyder
No. 41128
Exp. 3-31-13
CIVIL
STATE OF CALIFORNIA

THE STATE OF CALIFORNIA OR ITS OFFICERS OR AGENTS SHALL NOT BE RESPONSIBLE FOR THE ACCURACY OR COMPLETENESS OF SCANNED COPIES OF THIS PLAN SHEET.

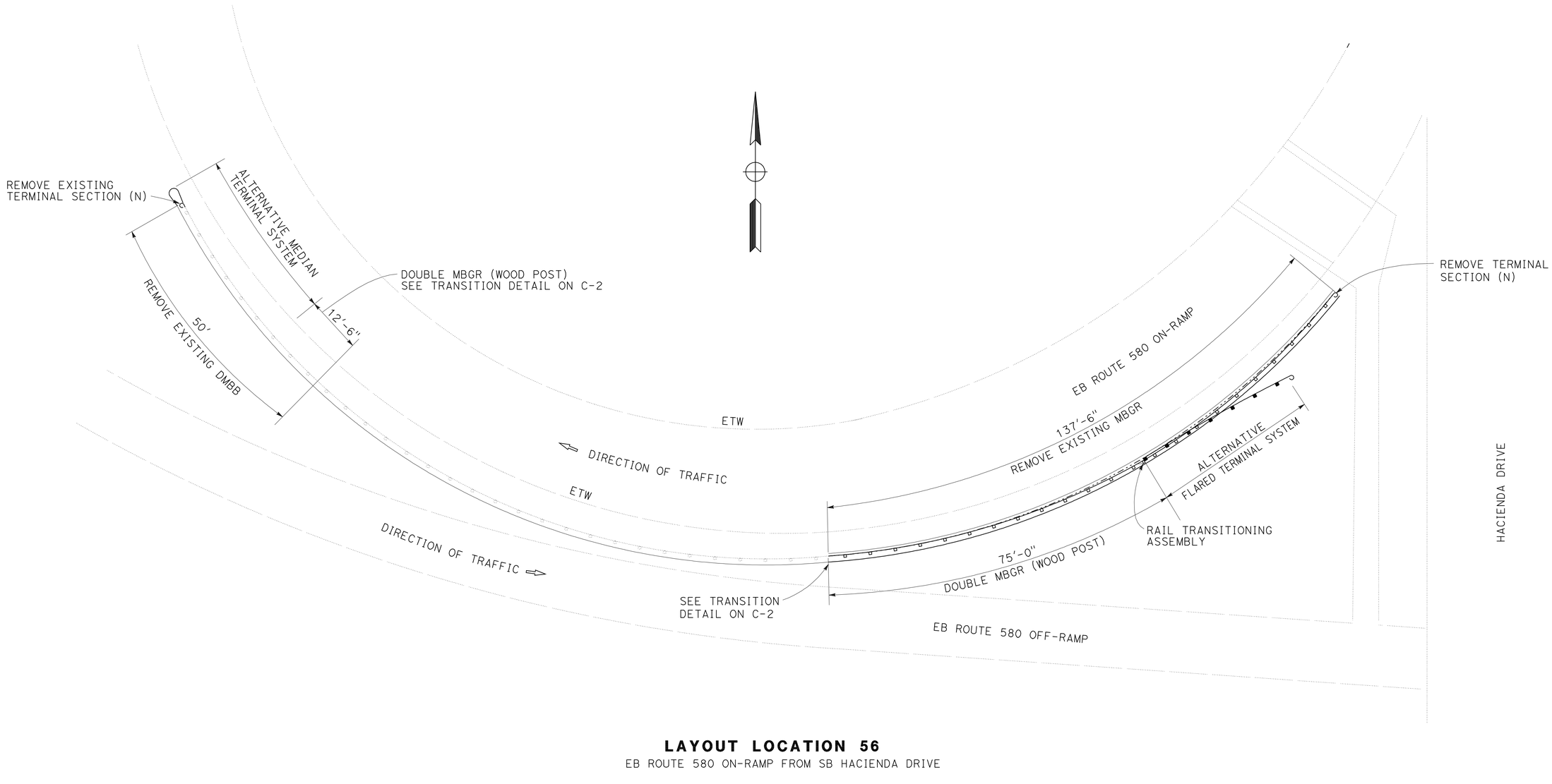

LAYOUT LOCATION 56
EB ROUTE 580 ON-RAMP FROM SB HACIENDA DRIVE

CONSTRUCTION DETAILS
NO SCALE

C-10

REVISED BY	DATE REVISED
-	-
-	-

CALCULATED-DESIGNED BY -
CHECKED BY -

FUNCTIONAL SUPERVISOR
ALBERT J. ZEPEDA

STATE OF CALIFORNIA - DEPARTMENT OF TRANSPORTATION
Caltrans®
DESIGN

LAST REVISION 04-13-12 | DATE PLOTTED => 05-JUN-2012 | TIME PLOTTED => 08:25

Dist	COUNTY	ROUTE	POST MILES TOTAL PROJECT	SHEET No.	TOTAL SHEETS
04	Ala,CC	4,80,84, 92,238,etc.	Var	15	141

Paul Snyder 4-11-12
REGISTERED CIVIL ENGINEER DATE

6-4-12
PLANS APPROVAL DATE

REGISTERED PROFESSIONAL ENGINEER
Paul Alan Snyder
No. 41128
Exp. 3-31-13
CIVIL
STATE OF CALIFORNIA

THE STATE OF CALIFORNIA OR ITS OFFICERS OR AGENTS SHALL NOT BE RESPONSIBLE FOR THE ACCURACY OR COMPLETENESS OF SCANNED COPIES OF THIS PLAN SHEET.

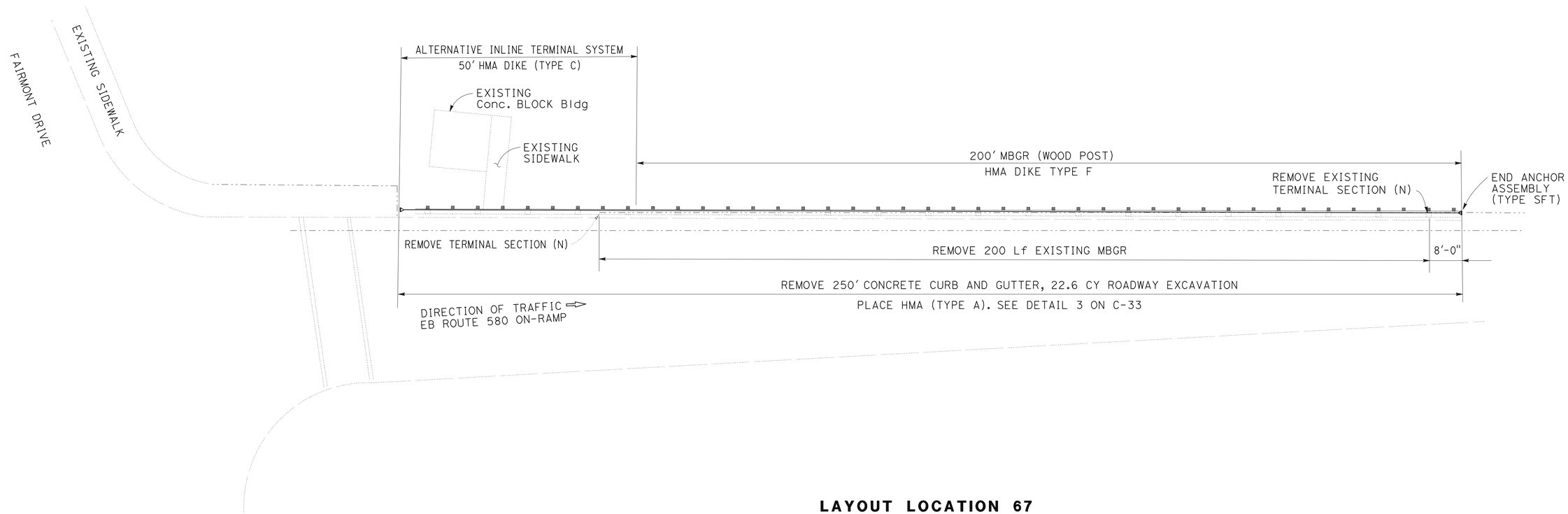

LAYOUT LOCATION 67

EB ROUTE 580 ON-RAMP FROM FAIRMONT DRIVE

PM 32.59

CONSTRUCTION DETAILS

NO SCALE

C-11

REVISED BY	DATE REVISED
-	-

CALCULATED-DESIGNED BY -
CHECKED BY -

FUNCTIONAL SUPERVISOR ALBERT J. ZEPEDA

STATE OF CALIFORNIA - DEPARTMENT OF TRANSPORTATION
Caltrans
DESIGN

LAST REVISION 04-11-12
DATE PLOTTED => 04-JUN-2012
TIME PLOTTED => 15:14

Dist	COUNTY	ROUTE	POST MILES TOTAL PROJECT	SHEET No.	TOTAL SHEETS
04	Ala,CC	4,80,84, 92,238,etc.	Var	16	141

Paul Snyder 4-11-12
REGISTERED CIVIL ENGINEER DATE

6-4-12
PLANS APPROVAL DATE

REGISTERED PROFESSIONAL ENGINEER
Paul Alan Snyder
No. 41128
Exp. 3-31-13
CIVIL
STATE OF CALIFORNIA

THE STATE OF CALIFORNIA OR ITS OFFICERS OR AGENTS SHALL NOT BE RESPONSIBLE FOR THE ACCURACY OR COMPLETENESS OF SCANNED COPIES OF THIS PLAN SHEET.

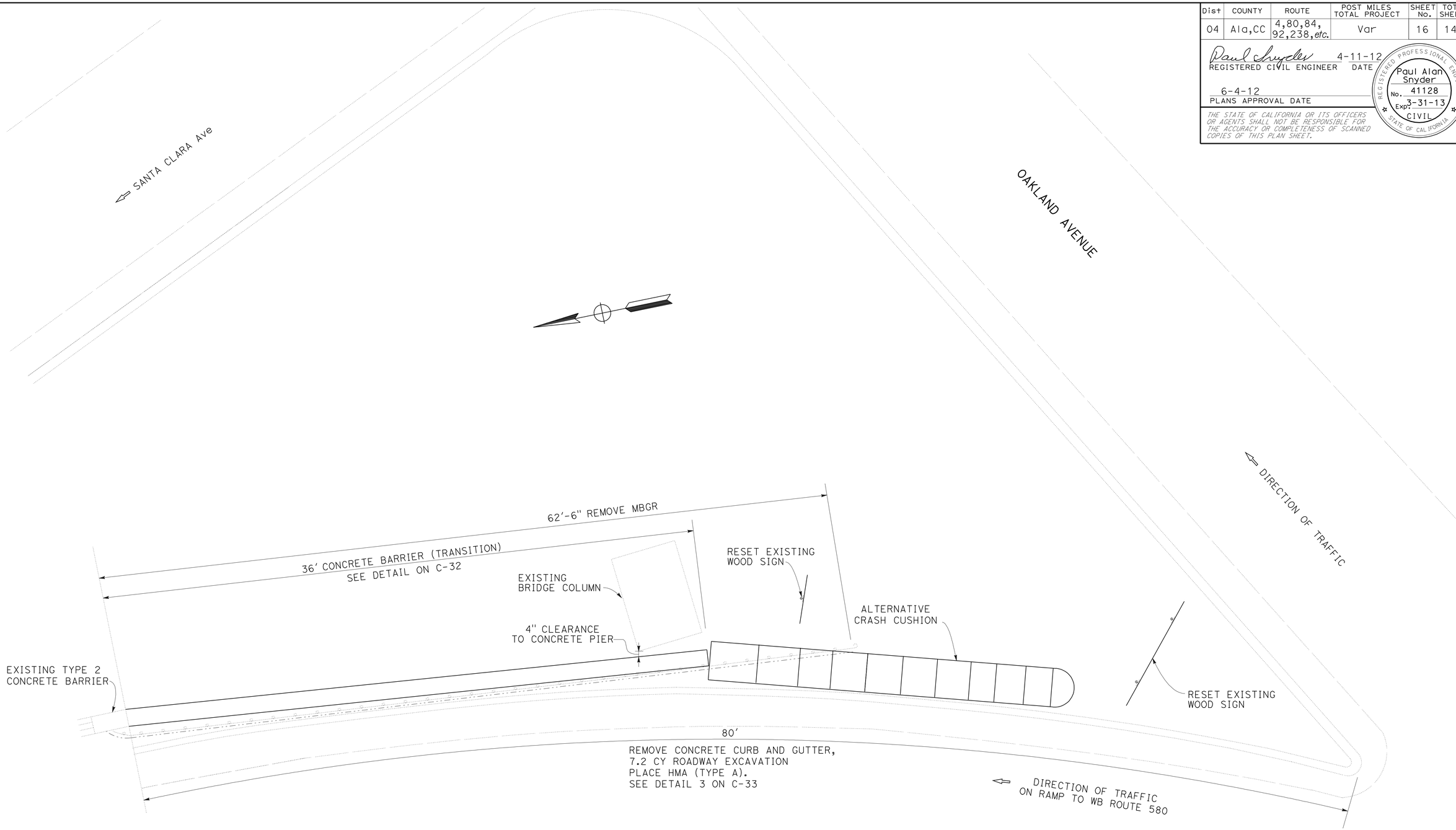

LAYOUT LOCATION 80

WB ROUTE 580 ON RAMP IN ALAMEDA COUNTY, PM 44.307

CONSTRUCTION DETAILS

NO SCALE

C-12

STATE OF CALIFORNIA - DEPARTMENT OF TRANSPORTATION
Caltrans®
DESIGN

FUNCTIONAL SUPERVISOR: ALBERT J. ZEPEDA

CALCULATED-DESIGNED BY | CHECKED BY

REVISED BY | DATE REVISED

LAST REVISION 04-11-12 | DATE PLOTTED => 04-JUN-2012 | TIME PLOTTED => 15:14

Dist	COUNTY	ROUTE	POST MILES TOTAL PROJECT	SHEET No.	TOTAL SHEETS
04	Ala,CC	4,80,84, 92,238,etc.	Var	17	141

Paul Snyder 4-11-12
REGISTERED CIVIL ENGINEER DATE

6-4-12
PLANS APPROVAL DATE

REGISTERED PROFESSIONAL ENGINEER
Paul Alan Snyder
No. 41128
Exp. 3-31-13
CIVIL
STATE OF CALIFORNIA

THE STATE OF CALIFORNIA OR ITS OFFICERS OR AGENTS SHALL NOT BE RESPONSIBLE FOR THE ACCURACY OR COMPLETENESS OF SCANNED COPIES OF THIS PLAN SHEET.

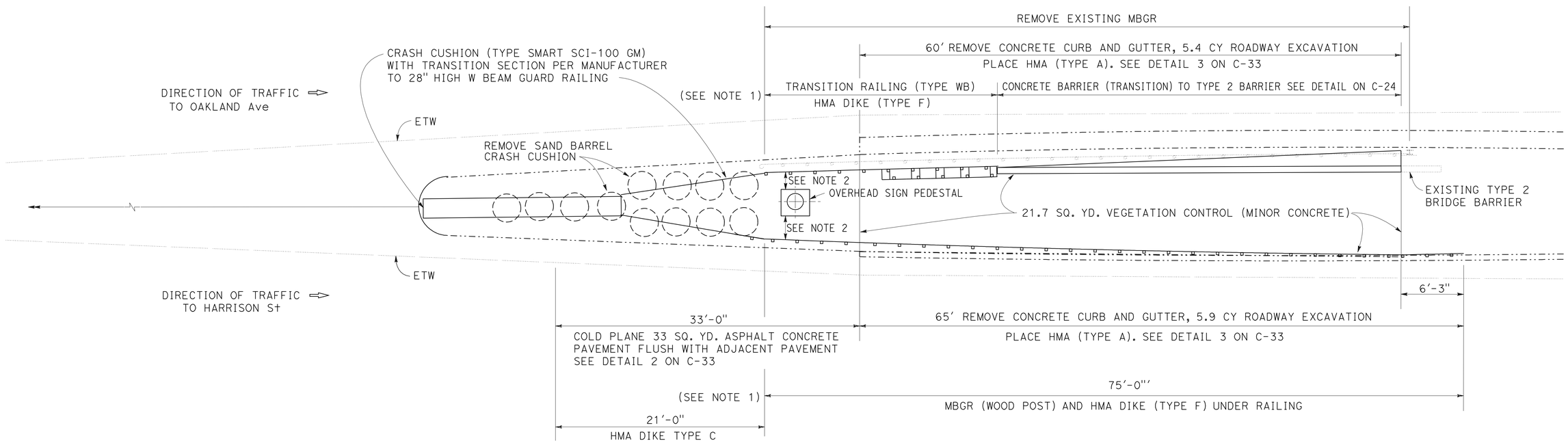

NOTES:

1. LAYOUT TRANSITION BARRIERS AND MBGR ON PARABOLA AS SHOWN BELOW
2. MINIMUM 27" CLEAR FROM SIGN PEDESTAL TO FACE OF RAILING

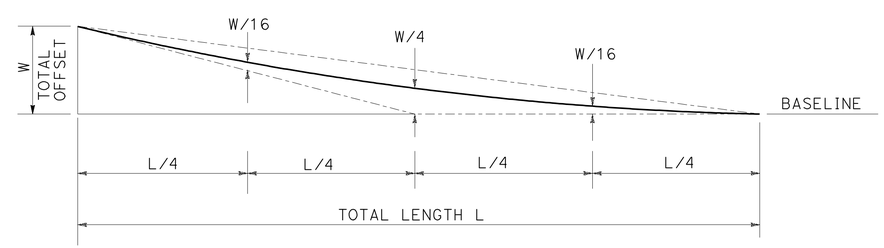

LAYOUT LOCATION 82(2)
EB OFF-RAMP TO HARRISON St & OAKLAND Ave
PM 44.43

CONSTRUCTION DETAILS
NO SCALE

C-13

STATE OF CALIFORNIA - DEPARTMENT OF TRANSPORTATION
Caltrans
DESIGN

FUNCTIONAL SUPERVISOR: ALBERT J. ZEPEDA

CALCULATED-DESIGNED BY | CHECKED BY | REVISED BY | DATE REVISED

LAST REVISION 04-11-12 | DATE PLOTTED => 04-JUN-2012 | TIME PLOTTED => 15:14

Dist	COUNTY	ROUTE	POST MILES TOTAL PROJECT	SHEET No.	TOTAL SHEETS
04	Ala,CC	4,80,84, 92,238,etc.	Var	18	141

Paul Snyder 4-11-12
REGISTERED CIVIL ENGINEER DATE

6-4-12
PLANS APPROVAL DATE

REGISTERED PROFESSIONAL ENGINEER
Paul Alan Snyder
No. 41128
Exp. 3-31-13
CIVIL
STATE OF CALIFORNIA

THE STATE OF CALIFORNIA OR ITS OFFICERS OR AGENTS SHALL NOT BE RESPONSIBLE FOR THE ACCURACY OR COMPLETENESS OF SCANNED COPIES OF THIS PLAN SHEET.

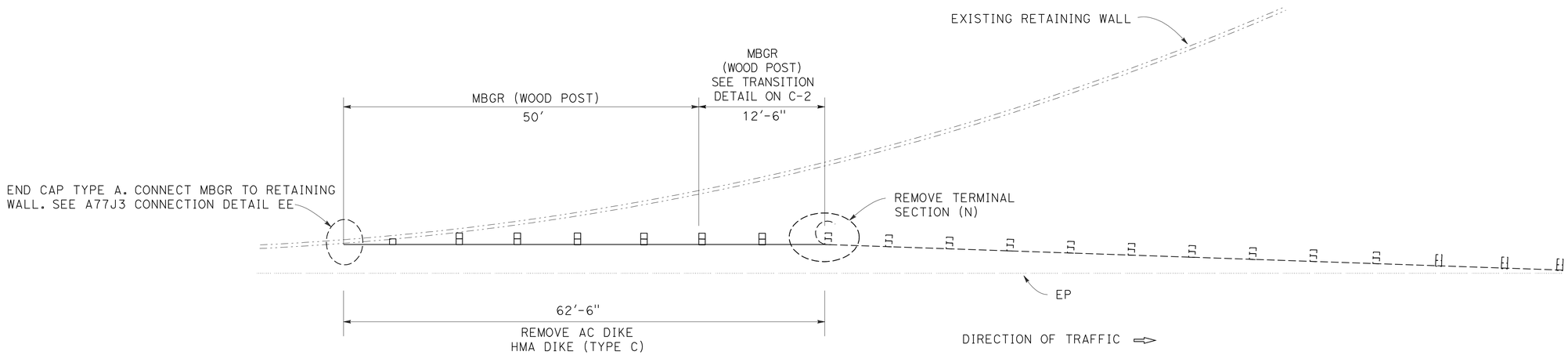

LAYOUT DETAIL
FOR LOCATION 91(1)

CONSTRUCTION DETAILS
NO SCALE

C-14

STATE OF CALIFORNIA - DEPARTMENT OF TRANSPORTATION
Caltrans®
DESIGN

FUNCTIONAL SUPERVISOR: ALBERT J. ZEPEDA

CALCULATED-DESIGNED BY | CHECKED BY
REVISED BY | DATE REVISED

LAST REVISION 04-13-12 | DATE PLOTTED => 04-JUN-2012 | TIME PLOTTED => 15:14

Dist	COUNTY	ROUTE	POST MILES TOTAL PROJECT	SHEET No.	TOTAL SHEETS
04	Ala,CC	4,80,84, 92,238,etc.	Var	19	141

Paul Snyder 4-11-12
REGISTERED CIVIL ENGINEER DATE

6-4-12
PLANS APPROVAL DATE

REGISTERED PROFESSIONAL ENGINEER
Paul Alan Snyder
No. 41128
Exp. 3-31-13
CIVIL
STATE OF CALIFORNIA

THE STATE OF CALIFORNIA OR ITS OFFICERS OR AGENTS SHALL NOT BE RESPONSIBLE FOR THE ACCURACY OR COMPLETENESS OF SCANNED COPIES OF THIS PLAN SHEET.

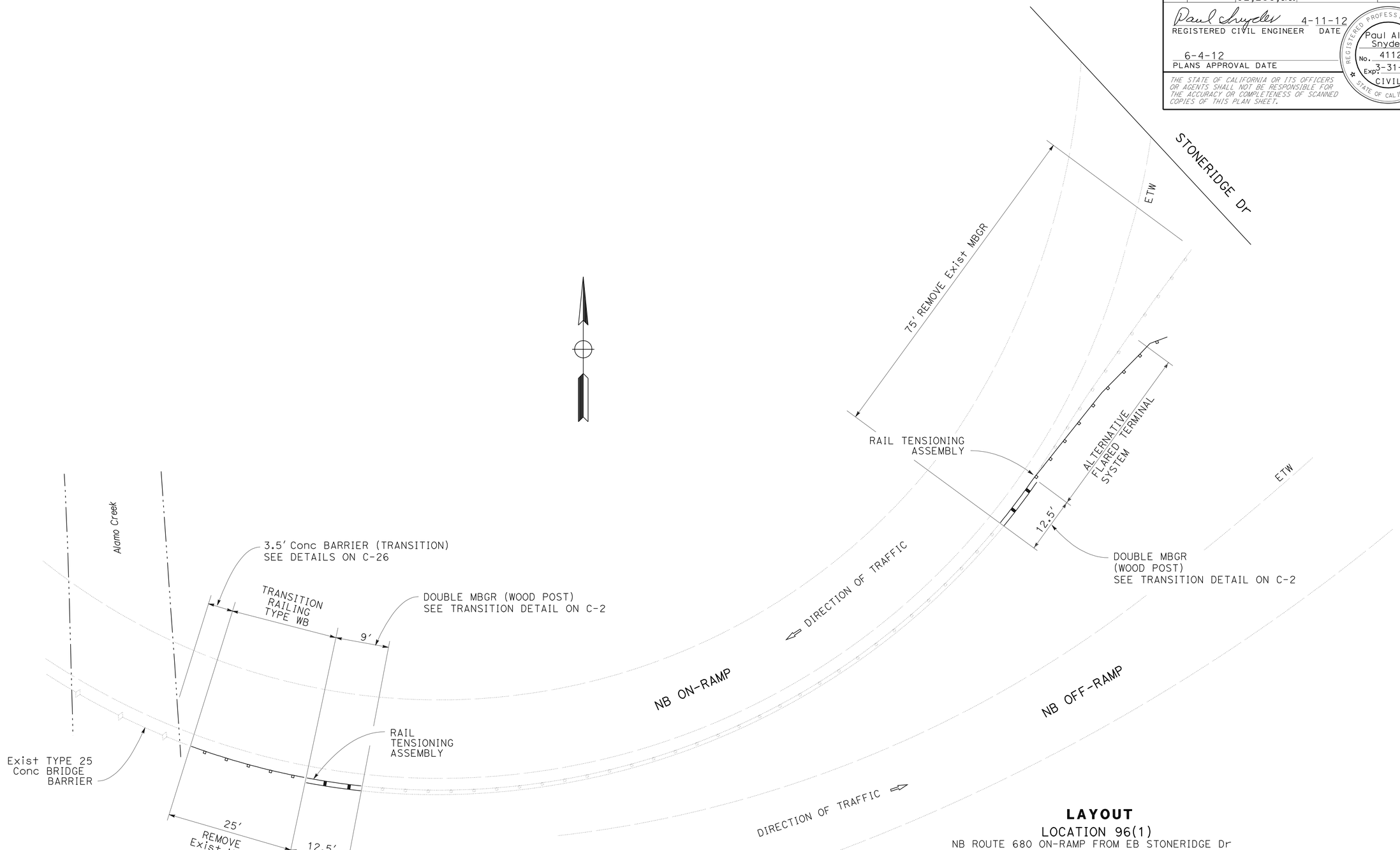

LAYOUT
LOCATION 96(1)
NB ROUTE 680 ON-RAMP FROM EB STONERIDGE Dr

CONSTRUCTION DETAILS
SCALE 1"=20'

C-15

REVISED BY	DATE REVISED
-	-
-	-

CALCULATED-DESIGNED BY
CHECKED BY

FUNCTIONAL SUPERVISOR
ALBERT J. ZEPEDA

STATE OF CALIFORNIA - DEPARTMENT OF TRANSPORTATION
Caltrans®
DESIGN

LAST REVISION 04-13-12 | DATE PLOTTED => 04-JUN-2012 | TIME PLOTTED => 15:14

Dist	COUNTY	ROUTE	POST MILES TOTAL PROJECT	SHEET No.	TOTAL SHEETS
04	Ala,CC	4,80,84, 92,238,etc.	Var	20	141

Paul Snyder 4-11-12
REGISTERED CIVIL ENGINEER DATE

6-4-12
PLANS APPROVAL DATE

REGISTERED PROFESSIONAL ENGINEER
Paul Alan Snyder
No. 41128
Exp. 3-31-13
CIVIL
STATE OF CALIFORNIA

THE STATE OF CALIFORNIA OR ITS OFFICERS OR AGENTS SHALL NOT BE RESPONSIBLE FOR THE ACCURACY OR COMPLETENESS OF SCANNED COPIES OF THIS PLAN SHEET.

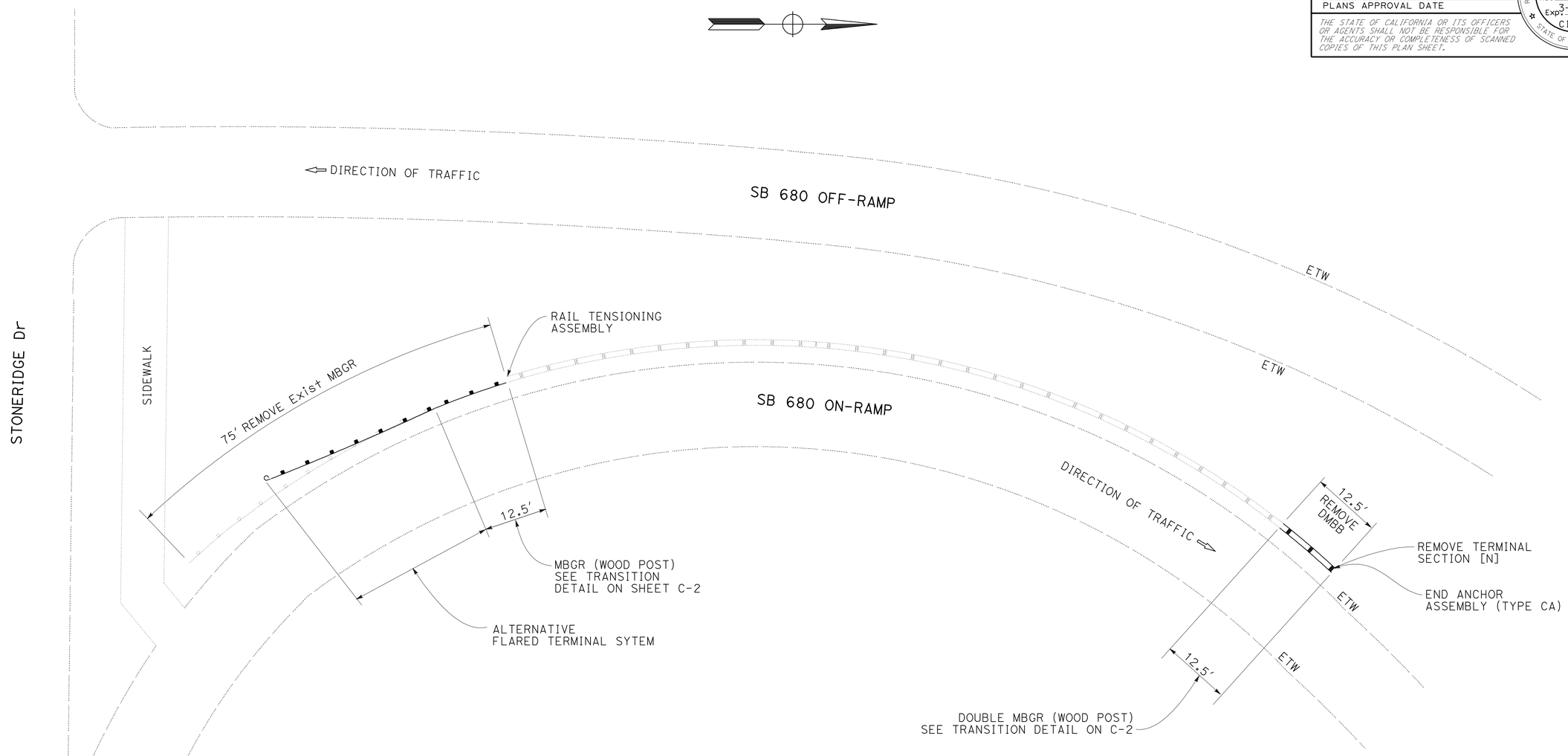

LAYOUT

LOCATION 97(1)
SB ROUTE 680 ON-RAMP FROM WB STONERIDGE Dr
PM 19.351

CONSTRUCTION DETAILS

NO SCALE

C-16

STATE OF CALIFORNIA - DEPARTMENT OF TRANSPORTATION
Caltrans
DESIGN

FUNCTIONAL SUPERVISOR: ALBERT J. ZEPEDA

CALCULATED-DESIGNED BY
CHECKED BY

REVISED BY -
DATE REVISED -

LAST REVISION 04-13-12 | DATE PLOTTED => 04-JUN-2012 | TIME PLOTTED => 15:14

Dist	COUNTY	ROUTE	POST MILES TOTAL PROJECT	SHEET No.	TOTAL SHEETS
04	Ala,CC	4,80,84, 92,238,etc.	Var	21	141

Paul Snyder 4-11-12
REGISTERED CIVIL ENGINEER DATE

6-4-12
PLANS APPROVAL DATE

REGISTERED PROFESSIONAL ENGINEER
Paul Alan Snyder
No. 41128
Exp. 3-31-13
CIVIL
STATE OF CALIFORNIA

THE STATE OF CALIFORNIA OR ITS OFFICERS OR AGENTS SHALL NOT BE RESPONSIBLE FOR THE ACCURACY OR COMPLETENESS OF SCANNED COPIES OF THIS PLAN SHEET.

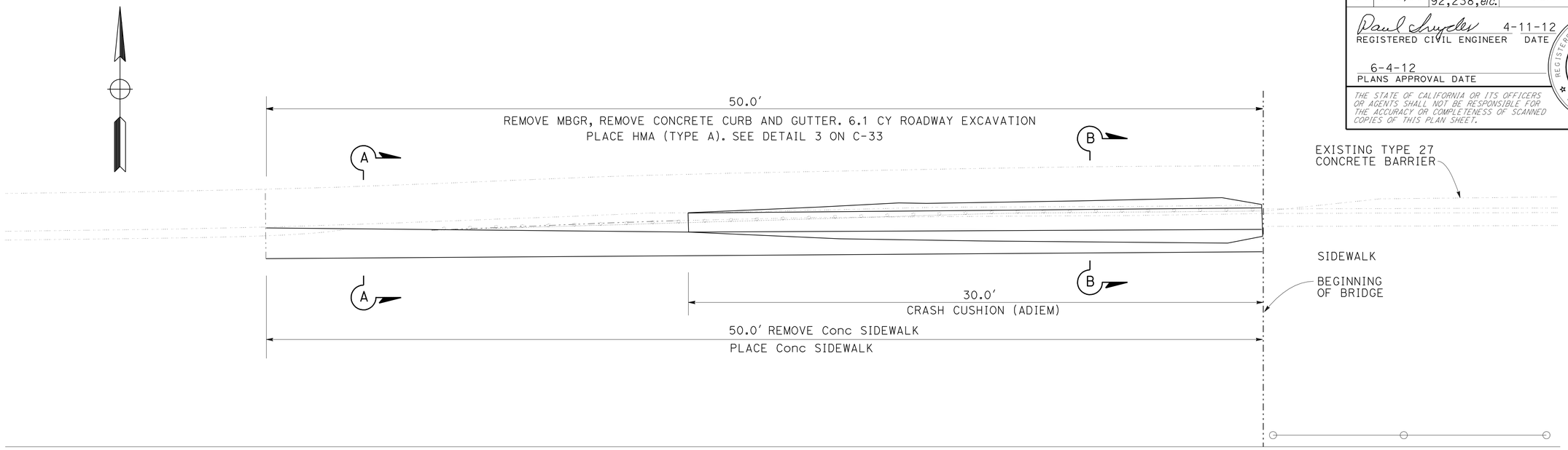

LAYOUT

LOCATION 103
EB CROW CANYON ROAD OC AT ROUTE 680 IN CONTRA COSTA COUNTY
PM 4.182

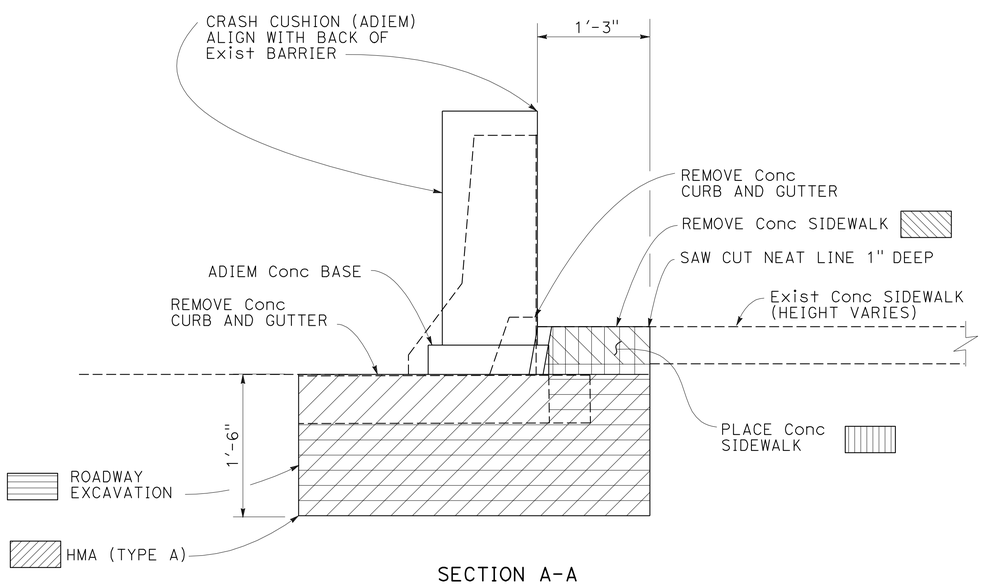

SECTION A-A
LOCATION 103
(CONSTRUCTION DETAIL LAYOUT)

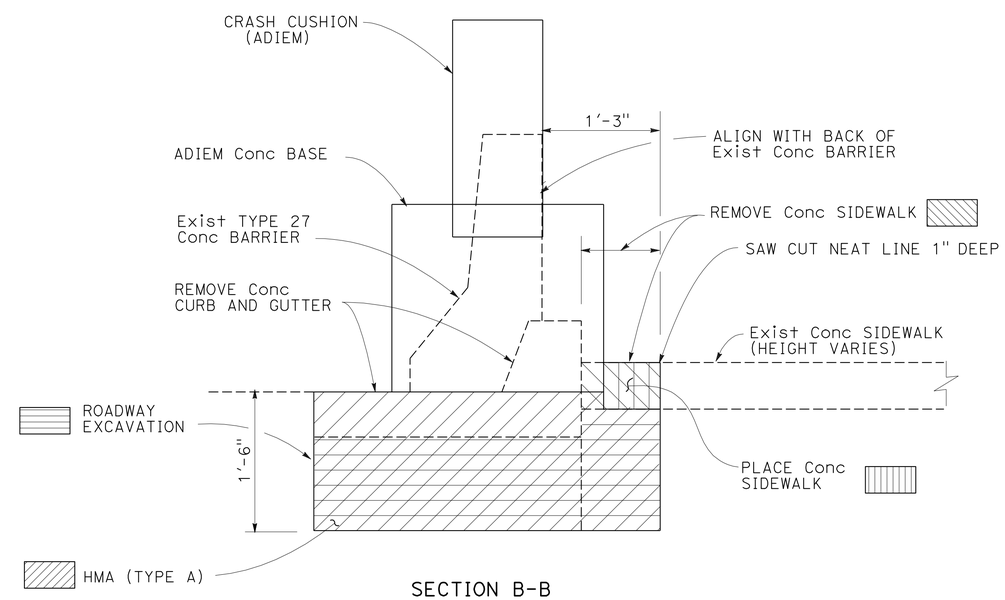

SECTION B-B
LOCATION 103
(CONSTRUCTION DETAIL LAYOUT)

CONSTRUCTION DETAILS

NO SCALE

C-17

REVISED BY	DATE REVISED
-	-
-	-

CALCULATED-DESIGNED BY
CHECKED BY
FUNCTIONAL SUPERVISOR
ALBERT J. ZEPEDA

STATE OF CALIFORNIA - DEPARTMENT OF TRANSPORTATION
Caltrans®
DESIGN

LAST REVISION 04-11-12
DATE PLOTTED => 04-JUN-2012
TIME PLOTTED => 15:14

Dist	COUNTY	ROUTE	POST MILES TOTAL PROJECT	SHEET No.	TOTAL SHEETS
04	Ala,CC	4,80,84, 92,238,etc.	Var	22	141

Paul Snyder 4-11-12
REGISTERED CIVIL ENGINEER DATE

6-4-12
PLANS APPROVAL DATE

REGISTERED PROFESSIONAL ENGINEER
Paul Alan Snyder
No. 41128
Exp. 3-31-13
CIVIL
STATE OF CALIFORNIA

THE STATE OF CALIFORNIA OR ITS OFFICERS OR AGENTS SHALL NOT BE RESPONSIBLE FOR THE ACCURACY OR COMPLETENESS OF SCANNED COPIES OF THIS PLAN SHEET.

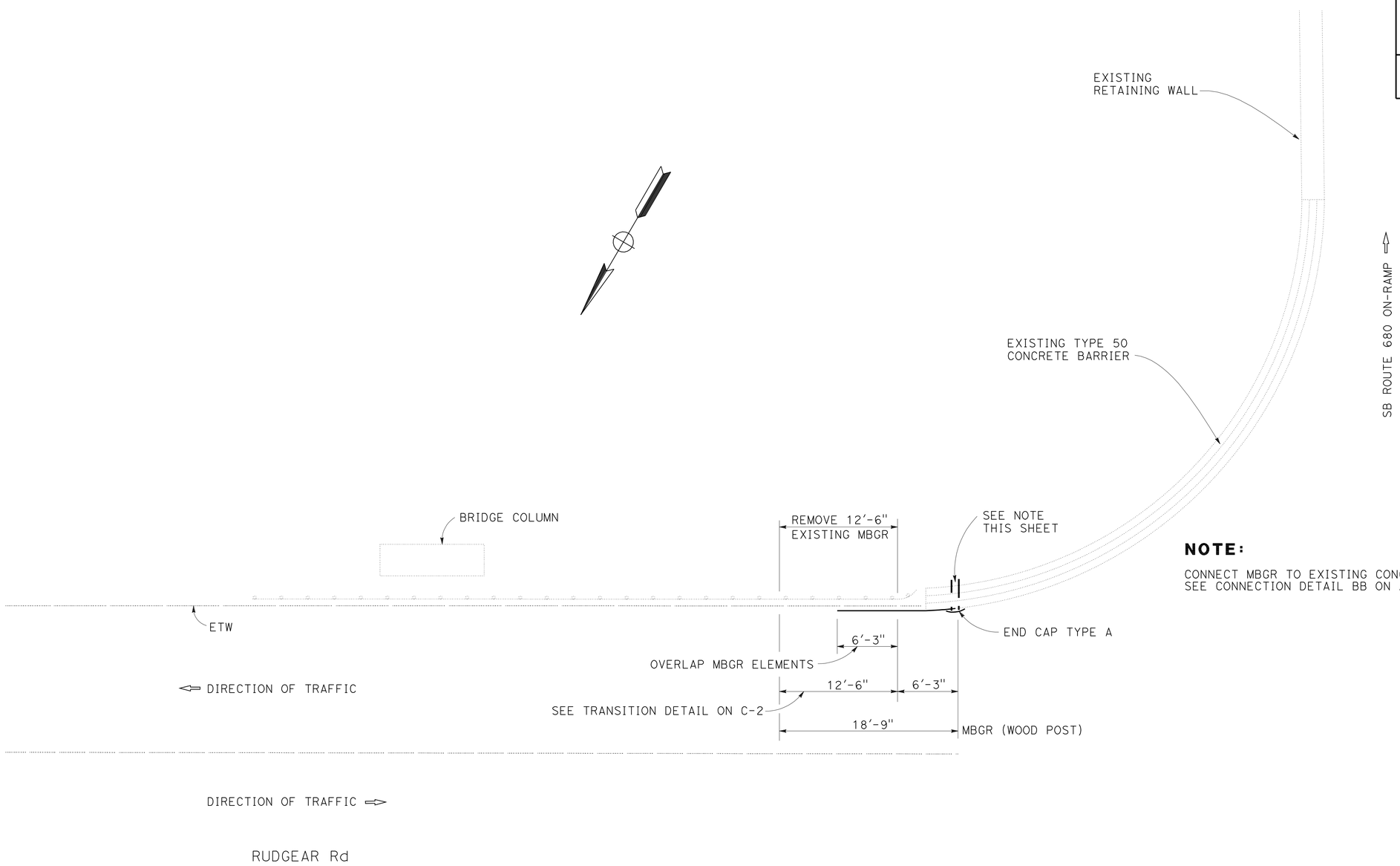

NOTE:

CONNECT MBGR TO EXISTING CONCRETE BARRIER.
SEE CONNECTION DETAIL BB ON A77J1

LOCATION 105

SB ROUTE 680 ON RAMP FROM DANVILLE Blvd AND RUDGEAR Rd

CONSTRUCTION DETAILS

NO SCALE

C-18

STATE OF CALIFORNIA - DEPARTMENT OF TRANSPORTATION
Caltrans®
DESIGN

FUNCTIONAL SUPERVISOR: ALBERT J. ZEPEDA

CALCULATED-DESIGNED BY | CHECKED BY

REVISED BY | DATE REVISED

LAST REVISION 04-13-12 | DATE PLOTTED => 04-JUN-2012 | TIME PLOTTED => 15:14

Dist	COUNTY	ROUTE	POST MILES TOTAL PROJECT	SHEET No.	TOTAL SHEETS
04	Ala,CC	4,80,84, 92,238,etc.	Var	23	141

Paul Snyder 4-11-12
REGISTERED CIVIL ENGINEER DATE

6-4-12
PLANS APPROVAL DATE

REGISTERED PROFESSIONAL ENGINEER
Paul Alan Snyder
No. 41128
Exp. 3-31-13
CIVIL
STATE OF CALIFORNIA

THE STATE OF CALIFORNIA OR ITS OFFICERS OR AGENTS SHALL NOT BE RESPONSIBLE FOR THE ACCURACY OR COMPLETENESS OF SCANNED COPIES OF THIS PLAN SHEET.

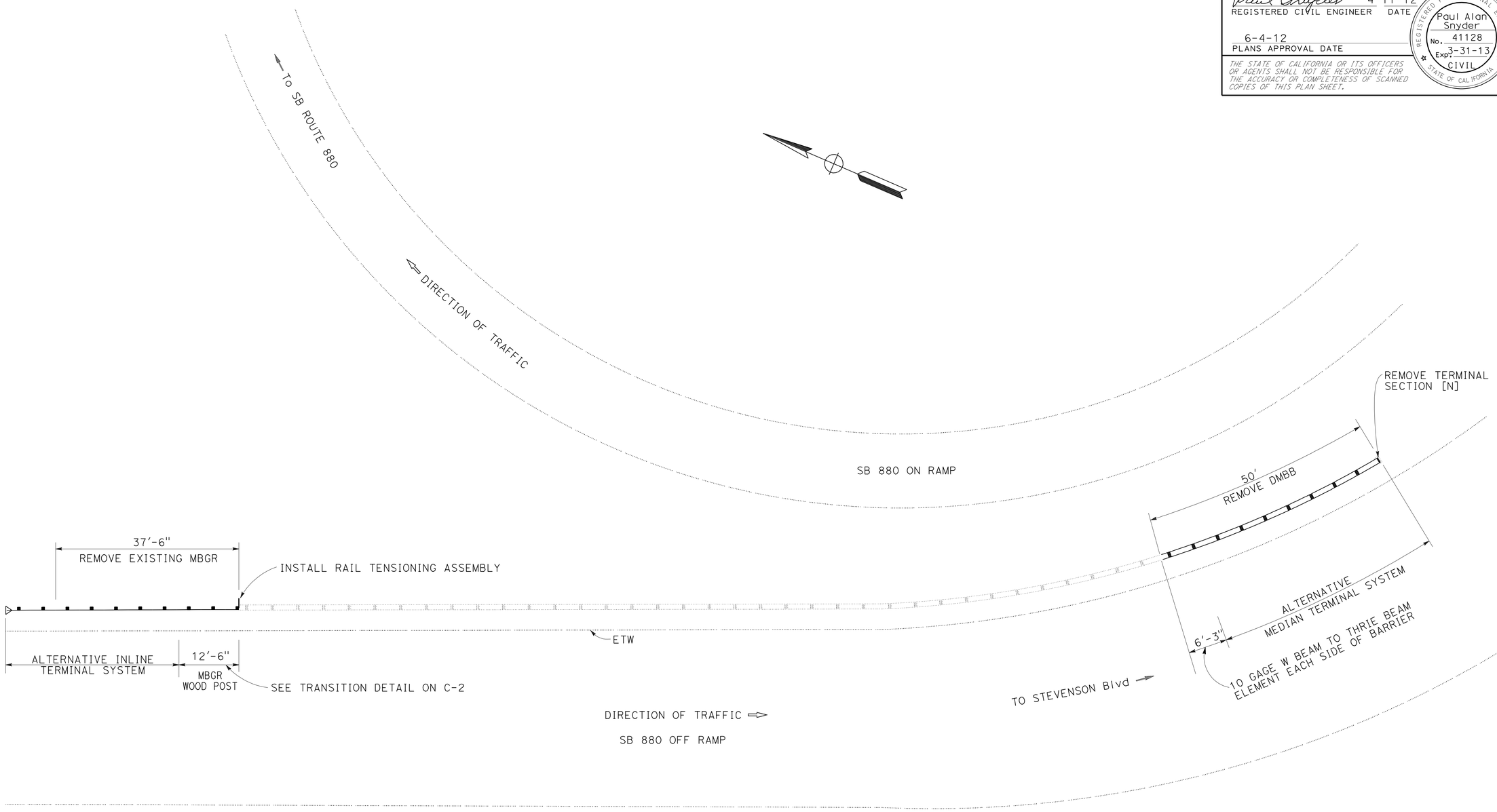

LOCATION 126

SB ROUTE 880 OFF-RAMP TO STEVENSON Blvd
PM 6.44

CONSTRUCTION DETAILS

NO SCALE

C-19

STATE OF CALIFORNIA - DEPARTMENT OF TRANSPORTATION
Caltrans
DESIGN

FUNCTIONAL SUPERVISOR: ALBERT J. ZEPEDA

CALCULATED-DESIGNED BY
CHECKED BY

REVISED BY -
DATE REVISED -

LAST REVISION 04-13-12
DATE PLOTTED => 04-JUN-2012
TIME PLOTTED => 15:14

Dist	COUNTY	ROUTE	POST MILES TOTAL PROJECT	SHEET No.	TOTAL SHEETS
04	Ala,CC	4,80,84, 92,238,etc.	Var	24	141

Paul Snyder 4-11-12
REGISTERED CIVIL ENGINEER DATE

6-4-12
PLANS APPROVAL DATE

REGISTERED PROFESSIONAL ENGINEER
Paul Alan Snyder
No. 41128
Exp. 3-31-13
CIVIL
STATE OF CALIFORNIA

THE STATE OF CALIFORNIA OR ITS OFFICERS OR AGENTS SHALL NOT BE RESPONSIBLE FOR THE ACCURACY OR COMPLETENESS OF SCANNED COPIES OF THIS PLAN SHEET.

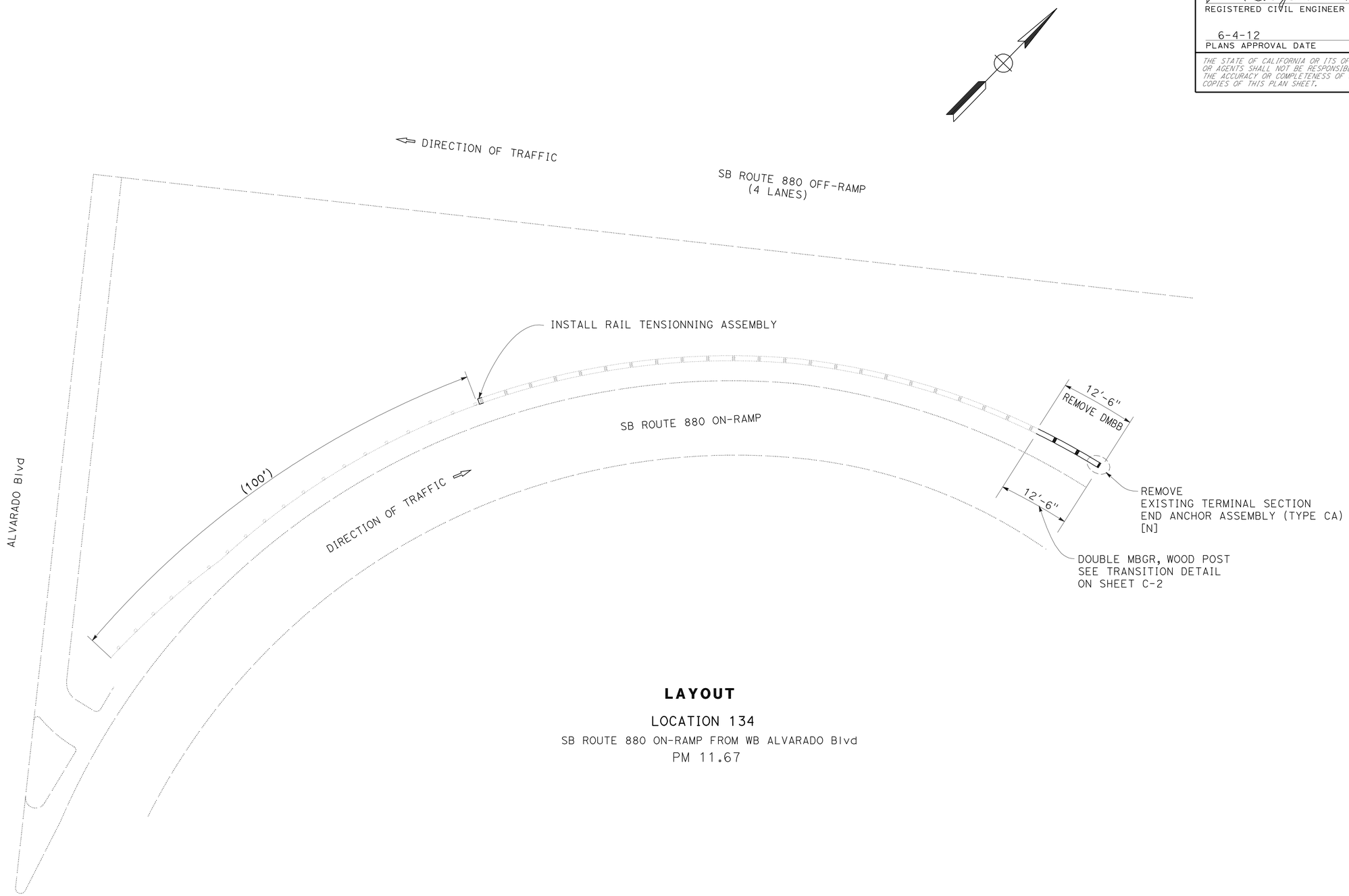

LAYOUT

LOCATION 134

SB ROUTE 880 ON-RAMP FROM WB ALVARADO Blvd

PM 11.67

CONSTRUCTION DETAILS

NO SCALE

C-20

REVISED BY	DATE REVISED
-	-

CALCULATED-DESIGNED BY
CHECKED BY

FUNCTIONAL SUPERVISOR
ALBERT J. ZEPEDA

STATE OF CALIFORNIA - DEPARTMENT OF TRANSPORTATION
Caltrans
DESIGN

LAST REVISION 04-13-12
DATE PLOTTED => 04-JUN-2012
TIME PLOTTED => 15:14

Dist	COUNTY	ROUTE	POST MILES TOTAL PROJECT	SHEET No.	TOTAL SHEETS
04	Ala,CC	4,80,84, 92,238,etc.	Var	25	141

Paul Snyder 4-11-12
REGISTERED CIVIL ENGINEER DATE

6-4-12
PLANS APPROVAL DATE

REGISTERED PROFESSIONAL ENGINEER
Paul Alan Snyder
No. 41128
Exp. 3-31-13
CIVIL
STATE OF CALIFORNIA

THE STATE OF CALIFORNIA OR ITS OFFICERS OR AGENTS SHALL NOT BE RESPONSIBLE FOR THE ACCURACY OR COMPLETENESS OF SCANNED COPIES OF THIS PLAN SHEET.

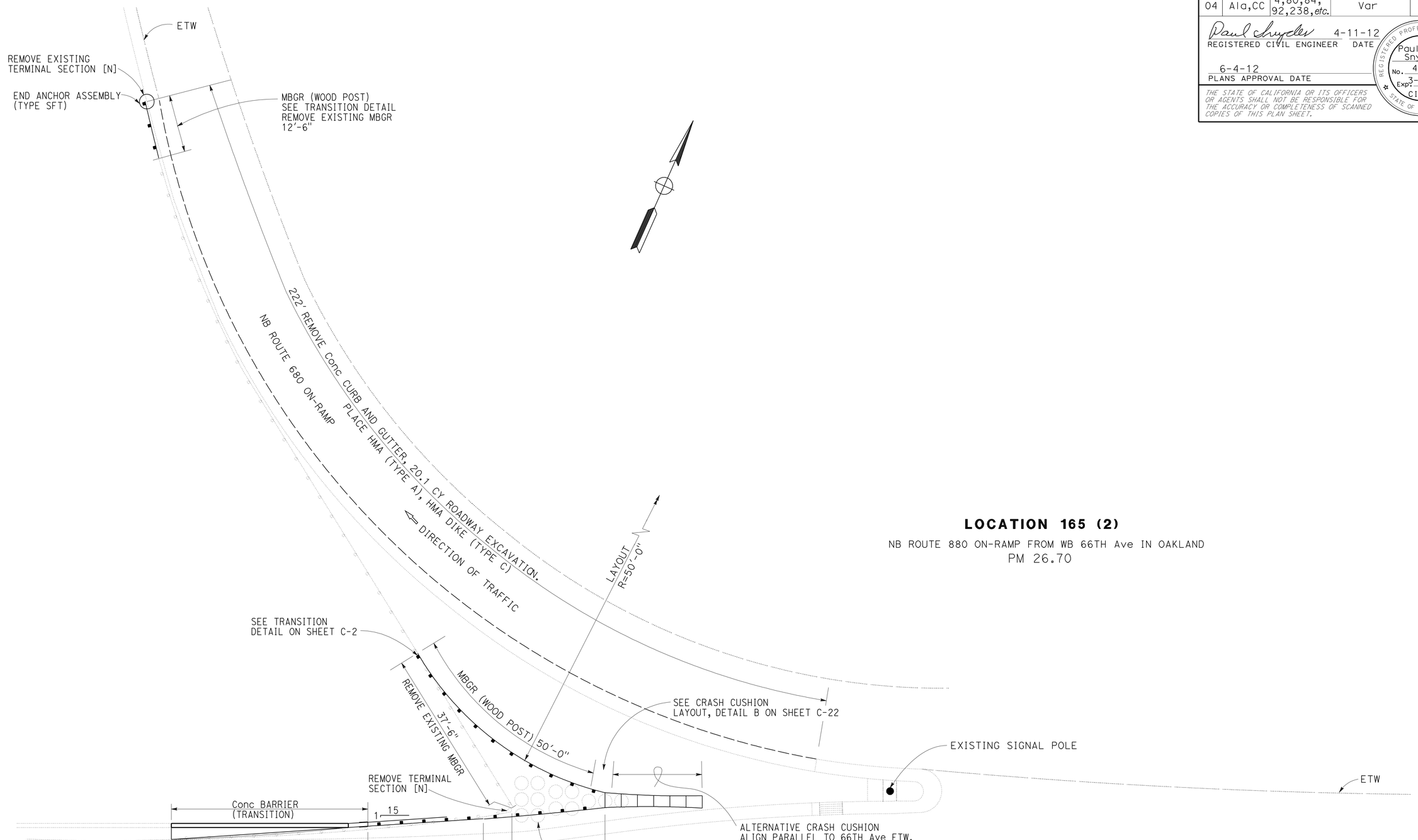

LOCATION 165 (2)

NB ROUTE 880 ON-RAMP FROM WB 66TH Ave IN OAKLAND
PM 26.70

CONSTRUCTION DETAILS

NO SCALE

C-21

STATE OF CALIFORNIA - DEPARTMENT OF TRANSPORTATION
Caltrans®
DESIGN

FUNCTIONAL SUPERVISOR: ALBERT J. ZEPEDA

CALCULATED-DESIGNED BY | CHECKED BY

REVISED BY | DATE REVISED

LAST REVISION 04-11-12 | DATE PLOTTED => 04-JUN-2012 | TIME PLOTTED => 15:14

Dist	COUNTY	ROUTE	POST MILES TOTAL PROJECT	SHEET No.	TOTAL SHEETS
04	Ala,CC	4,80,84, 92,238,etc.	Var	26	141

Paul Snyder 4-11-12
REGISTERED CIVIL ENGINEER DATE

6-4-12
PLANS APPROVAL DATE

REGISTERED PROFESSIONAL ENGINEER
Paul Alan Snyder
No. 41128
Exp. 3-31-13
CIVIL
STATE OF CALIFORNIA

THE STATE OF CALIFORNIA OR ITS OFFICERS OR AGENTS SHALL NOT BE RESPONSIBLE FOR THE ACCURACY OR COMPLETENESS OF SCANNED COPIES OF THIS PLAN SHEET.

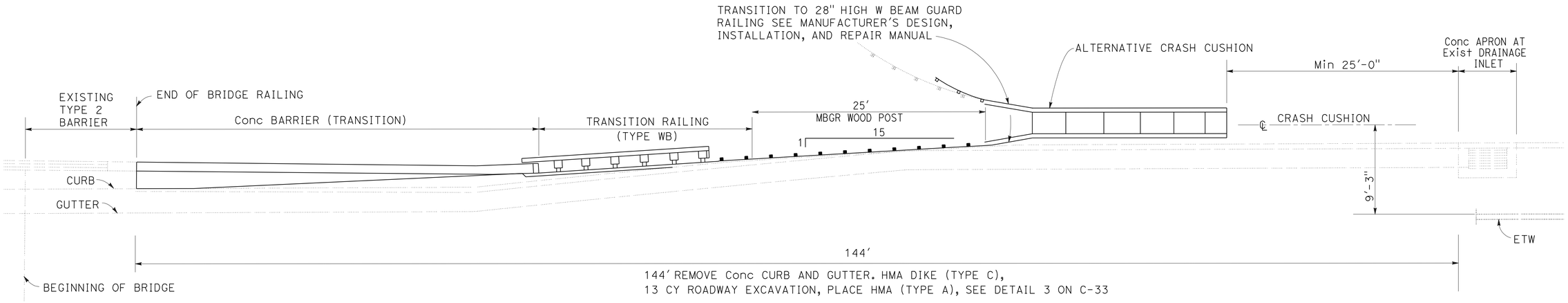

DETAIL B (FOR C-21, LOCATION 165 (2), WB 66th Ave AT ROUTE 880)
CRASH CUSHION LAYOUT, PLAN

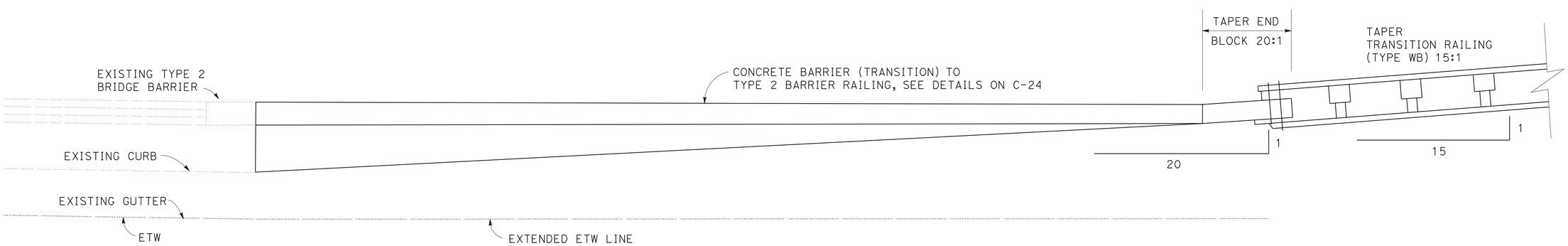

DETAIL A (FOR C-21, LOCATION 165 (2), WB 66th Ave AT ROUTE 880)
PLAN

CONSTRUCTION DETAILS
NO SCALE

C-22

STATE OF CALIFORNIA - DEPARTMENT OF TRANSPORTATION
Caltrans®
DESIGN
FUNCTIONAL SUPERVISOR: ALBERT J. ZEPEDA
CALCULATED-DESIGNED BY
CHECKED BY
REVISED BY
DATE REVISED

LAST REVISION 04-11-12
DATE PLOTTED => 04-JUN-2012
TIME PLOTTED => 15:14

DIST	COUNTY	ROUTE	POST MILES TOTAL PROJECT	SHEET No.	TOTAL SHEETS
04	Ala,CC	4,80,84, 92,238,etc.	Var	27	141

Paul Snyder 4-11-12
REGISTERED CIVIL ENGINEER DATE

6-4-12
PLANS APPROVAL DATE

REGISTERED PROFESSIONAL ENGINEER
Paul A. Snyder
No. 41128
Exp. 3-31-13
CIVIL
STATE OF CALIFORNIA

The State of California or its officers or agents shall not be responsible for the accuracy or completeness of electronic copies of this plan sheet.

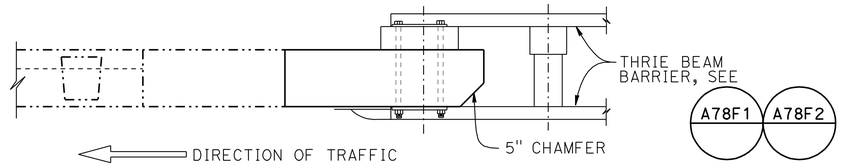

PLAN
3/4" = 1'-0"

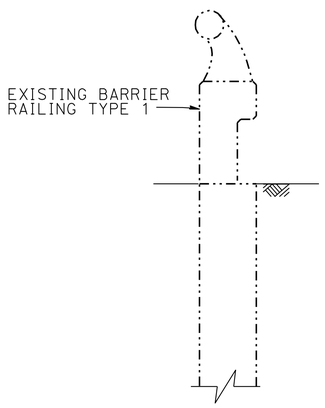

SECTION A-A
3/4" = 1'-0"

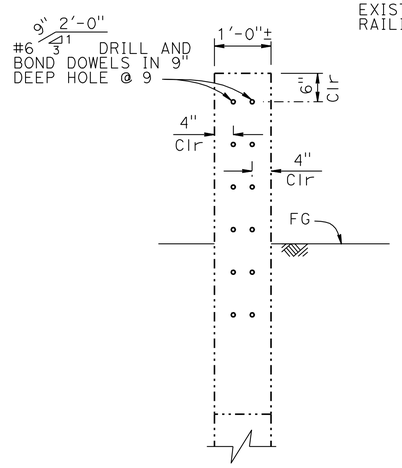

SECTION B-B
3/4" = 1'-0"

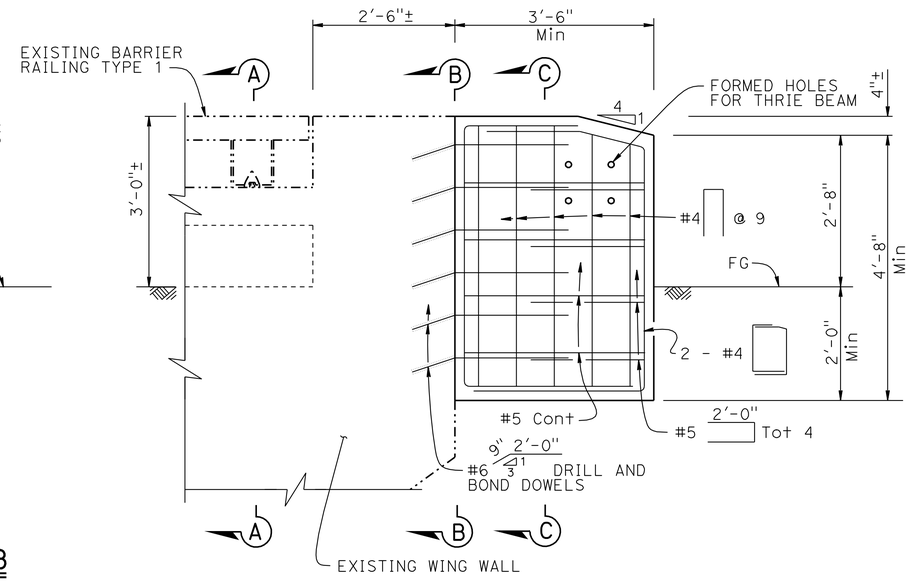

ELEVATION
3/4" = 1'-0"

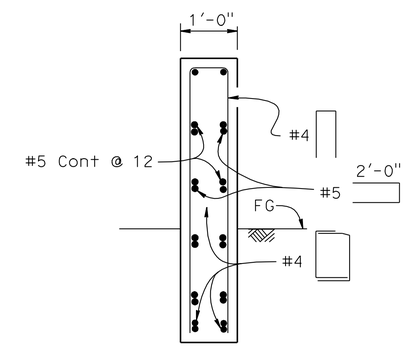

NOTE:
Drill and bond dowels not shown

SECTION C-C
3/4" = 1'-0"

NOTE:
Cut and remove portion of Type 1 and BAGR as required

LEGEND:
Indicates Existing Structure
Indicates New Structure

NOTE:
THE CONTRACTOR SHALL VERIFY ALL CONTROLLING FIELD DIMENSIONS BEFORE ORDERING OR FABRICATING ANY MATERIAL.

CONSTRUCTION DETAILS
C-23

STANDARD DRAWING
FILE NO. xs16-025
APPROVAL DATE July 2011

STATE OF CALIFORNIA
DEPARTMENT OF TRANSPORTATION

DIVISION OF ENGINEERING SERVICES

BRIDGE NO. Var
POST MILE Var

CONCRETE BARRIER (TRANSITION)
TO TYPE 1 BARRIER RAILING

DS OSD 2147A (ENGLISH STANDARD DRAWING "XS" BORDER REV. (02-02-11)

ORIGINAL SCALE IN INCHES FOR REDUCED PLANS 0 1 2 3

UNIT: 0727
PROJECT NUMBER & PHASE: 04 0000 0164-1 CONTRACT NO.: X

DISREGARD PRINTS BEARING EARLIER REVISION DATES

REVISION DATES | SHEET X | OF X

FILE => 0400000164ga023.dgn

USERNAME => s135318 DATE PLOTTED => 04-JUN-2012 TIME PLOTTED => 16:03

DIST	COUNTY	ROUTE	POST MILES TOTAL PROJECT	SHEET No.	TOTAL SHEETS
04	Ala,CC	4,80,84, 92,238,etc.	Var	28	141

Paul Snyder 4-11-12
REGISTERED CIVIL ENGINEER DATE

6-4-12
PLANS APPROVAL DATE

REGISTERED PROFESSIONAL ENGINEER
Paul A. Snyder
No. 41128
Exp. 3-31-13
CIVIL
STATE OF CALIFORNIA

The State of California or its officers or agents shall not be responsible for the accuracy or completeness of electronic copies of this plan sheet.

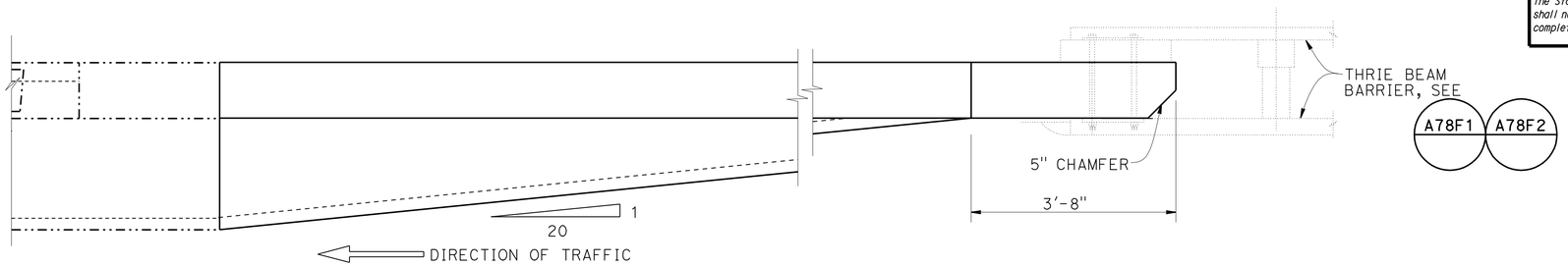

PLAN
3/4" = 1'-0"

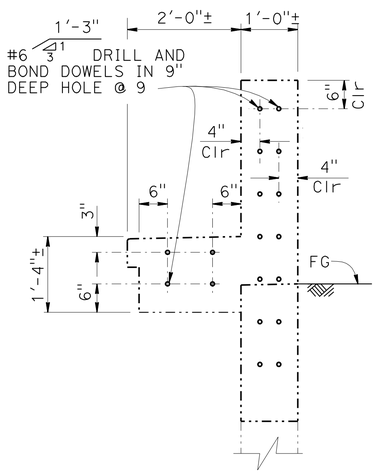

SECTION C-C
3/4" = 1'-0"

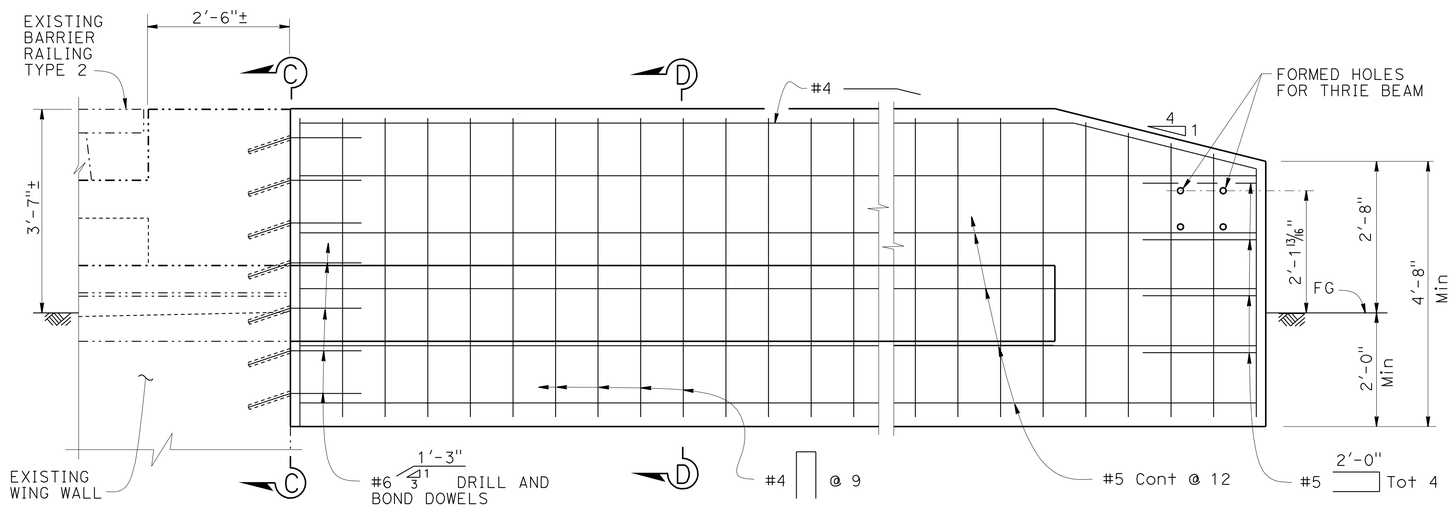

ELEVATION
3/4" = 1'-0"

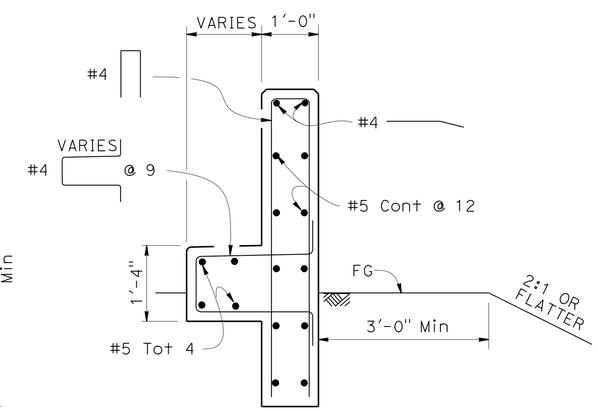

SECTION D-D
3/4" = 1'-0"

NOTES:

Cut and remove portion of Type 2 and BAGR as required

LEGEND:

-·-·- Indicates Existing Structure

——— Indicates New Structure

NOTE:
THE CONTRACTOR SHALL VERIFY ALL CONTROLLING FIELD DIMENSIONS BEFORE ORDERING OR FABRICATING ANY MATERIAL.

CONSTRUCTION DETAILS

C-24

STANDARD DRAWING

FILE NO. xs16-026

APPROVAL DATE August 2011

STATE OF CALIFORNIA
DEPARTMENT OF TRANSPORTATION

DIVISION OF ENGINEERING SERVICES

BRIDGE NO. Var
POST MILE Var

CONCRETE BARRIER (TRANSITION)
TO TYPE 2 BARRIER RAILING

DS OSD 2147A (ENGLISH STANDARD DRAWING "XS" BORDER REV. (02-02-11)

ORIGINAL SCALE IN INCHES FOR REDUCED PLANS 0 1 2 3

UNIT: 0727
PROJECT NUMBER & PHASE: 04 0000 0164-1 CONTRACT NO.: X

DISREGARD PRINTS BEARING EARLIER REVISION DATES

REVISION DATES | SHEET X | OF X

FILE => 0400000164ga024.dgn

USERNAME => s135318 DATE PLOTTED => 04-JUN-2012 TIME PLOTTED => 16:04

Dist	COUNTY	ROUTE	POST MILES TOTAL PROJECT	SHEET No.	TOTAL SHEETS
04	Ala,CC	4,80,84, 92,238,etc.	Var	29	141

Paul Snyder 4-11-12
REGISTERED CIVIL ENGINEER DATE

6-4-12
PLANS APPROVAL DATE

REGISTERED PROFESSIONAL ENGINEER
Paul Alan Snyder
No. 41128
Exp. 3-31-13
CIVIL
STATE OF CALIFORNIA

THE STATE OF CALIFORNIA OR ITS OFFICERS OR AGENTS SHALL NOT BE RESPONSIBLE FOR THE ACCURACY OR COMPLETENESS OF SCANNED COPIES OF THIS PLAN SHEET.

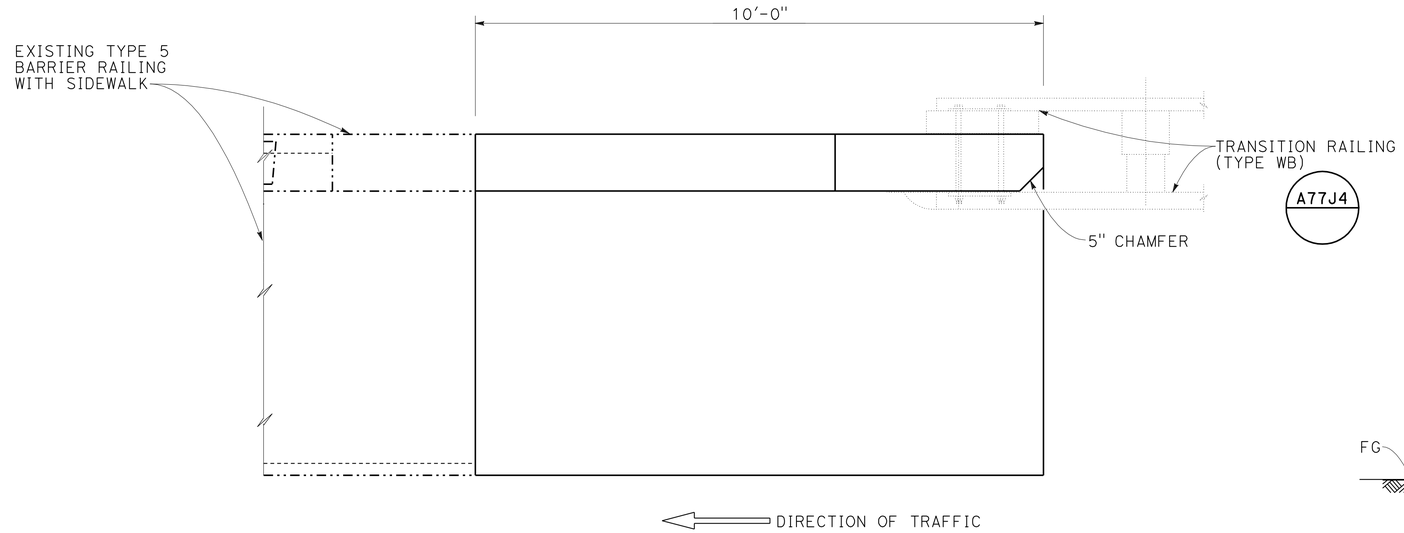

PLAN

¾" = 1'-0"

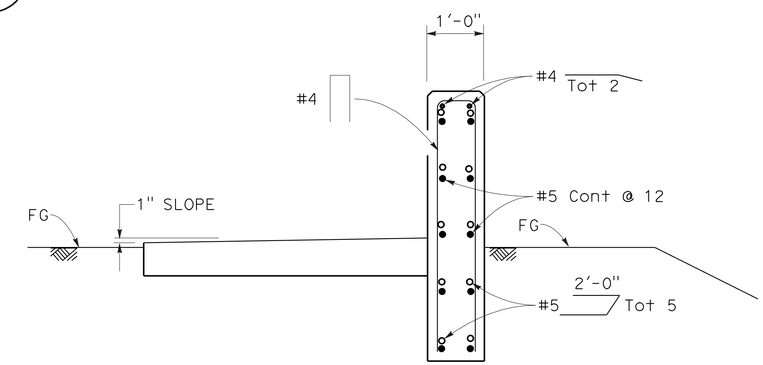

SECTION E-E

¾" = 1'-0"

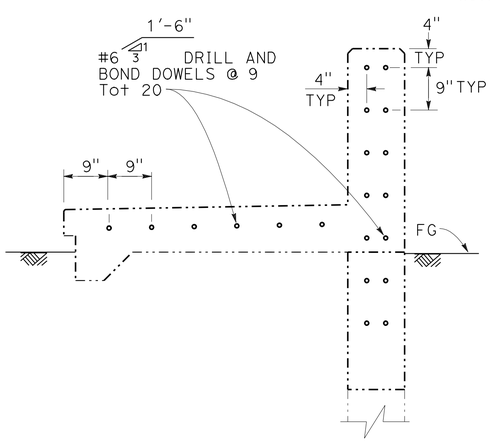

SECTION C-C

¾" = 1'-0"

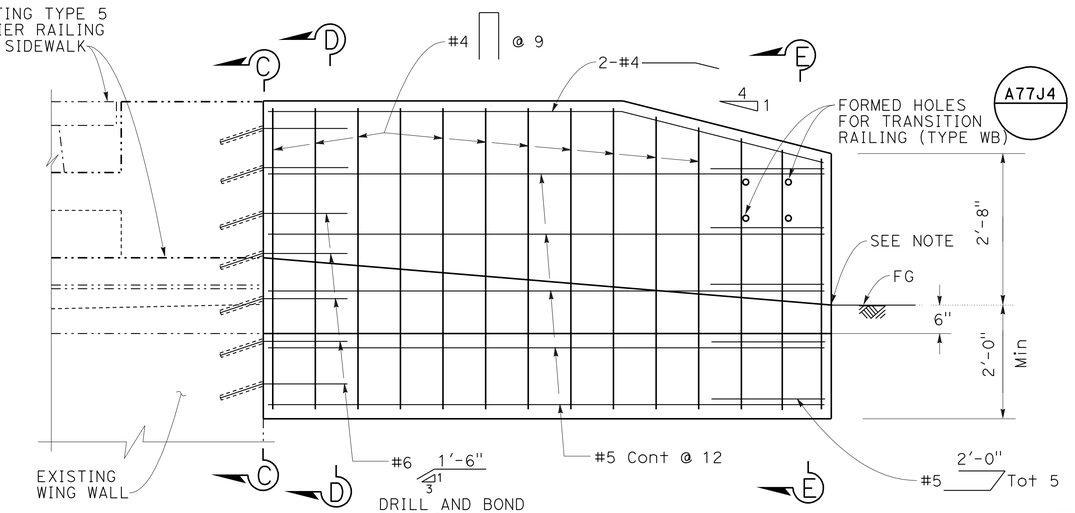

ELEVATION

¾" = 1'-0"

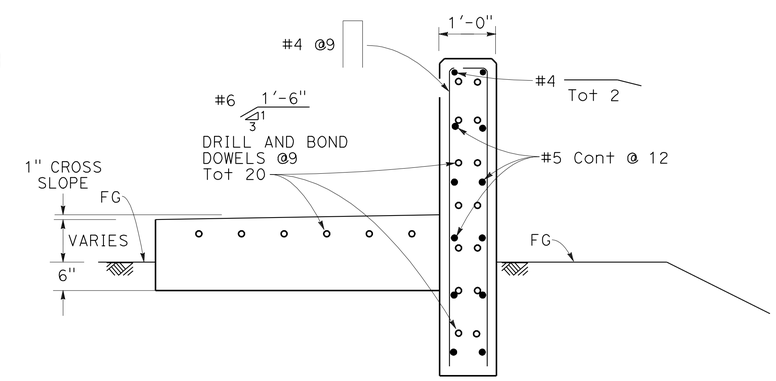

SECTION D-D

¾" = 1'-0"

NOTE:
THE CONTRACTOR SHALL VERIFY ALL CONTROLLING FIELD DIMENSIONS BEFORE ORDERING OR FABRICATING ANY MATERIAL.

NOTE:
END SIDEWALK RAMP 2" ABOVE FG TO BUTT AGAINST HMA DIKE (TYPE C) WHERE APPLICABLE.

LEGEND:

··—··— INDICATES EXISTING STRUCTURE

——— INDICATES NEW STRUCTURE

CONSTRUCTION DETAILS

CONCRETE BARRIER (TRANSITION) AND SIDEWALK RAMP TO TYPE 5 BARRIER
NO SCALE

C-25

REVISED BY	DATE REVISED
-	-
-	-

CALCULATED-DESIGNED BY
CHECKED BY

FUNCTIONAL SUPERVISOR
ALBERT J. ZEPEDA

STATE OF CALIFORNIA - DEPARTMENT OF TRANSPORTATION
Caltrans
DESIGN

LAST REVISION 04-11-12
DATE PLOTTED => 04-JUN-2012
TIME PLOTTED => 16:04

DIST	COUNTY	ROUTE	POST MILES TOTAL PROJECT	SHEET No.	TOTAL SHEETS
04	Ala,CC	4,80,84, 92,238,etc.	Var	30	141

Paul Snyder 4-11-12
REGISTERED CIVIL ENGINEER DATE

6-4-12
PLANS APPROVAL DATE

REGISTERED PROFESSIONAL ENGINEER
Paul A. Snyder
No. 41128
Exp. 3-31-13
CIVIL
STATE OF CALIFORNIA

The State of California or its officers or agents shall not be responsible for the accuracy or completeness of electronic copies of this plan sheet.

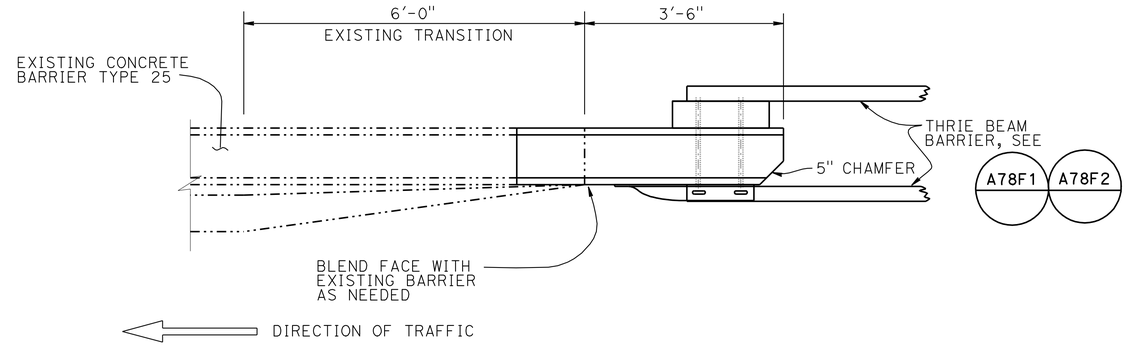

PLAN
3/4" = 1'-0"

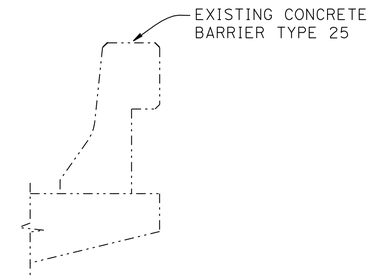

CONCRETE BARRIER TYPE 25
3/4" = 1'-0"

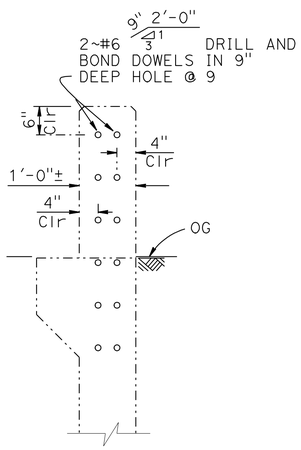

SECTION A-A
3/4" = 1'-0"

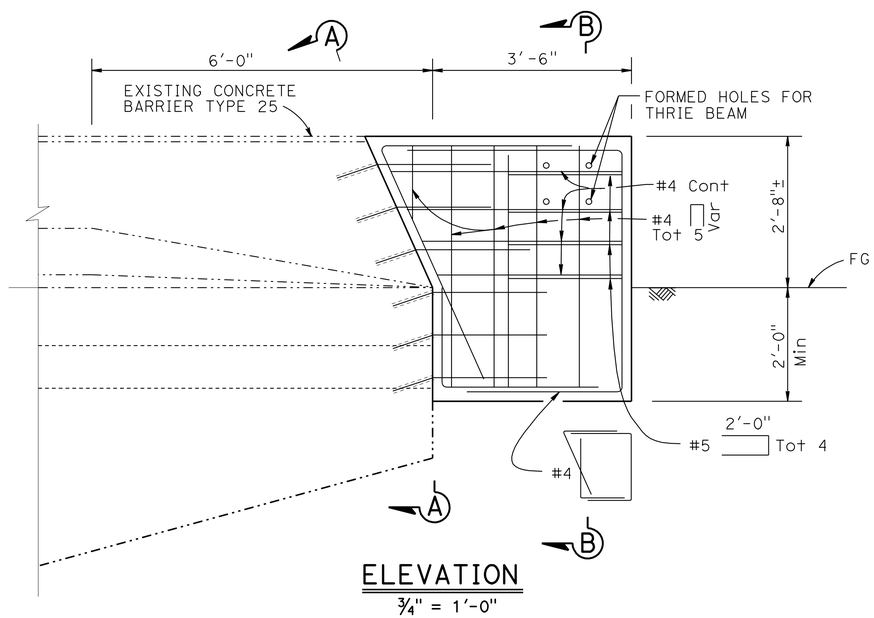

ELEVATION
3/4" = 1'-0"

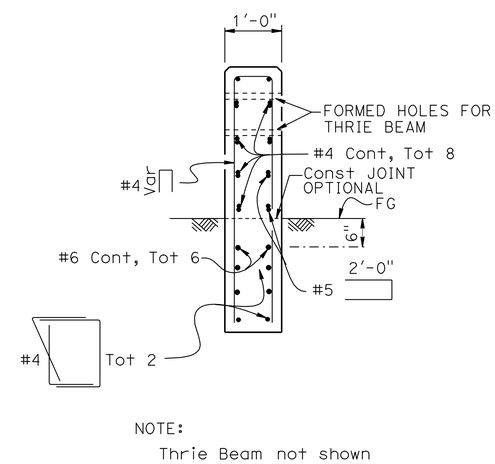

NOTE:
Thrie Beam not shown

SECTION B-B
3/4" = 1'-0"

LEGEND:

-·-·-·- Indicates Existing Structure

——— Indicates New Construction

NOTE:
THE CONTRACTOR SHALL VERIFY ALL CONTROLLING FIELD DIMENSIONS BEFORE ORDERING OR FABRICATING ANY MATERIAL.

CONSTRUCTION DETAILS
C-26

STANDARD DRAWING
FILE NO. xs16-010
APPROVAL DATE July 2011

STATE OF CALIFORNIA
DEPARTMENT OF TRANSPORTATION

DIVISION OF ENGINEERING SERVICES

BRIDGE NO. Var
POST MILE Var

CONCRETE BARRIER (TRANSITION) TO TYPE 25 BARRIER RAILING

DS OSD 2147A (ENGLISH STANDARD DRAWING "XS" BORDER REV. (02-02-11)

ORIGINAL SCALE IN INCHES FOR REDUCED PLANS 0 1 2 3

UNIT: 0727
PROJECT NUMBER & PHASE: 04 0000 0164-1 CONTRACT NO.: X

DISREGARD PRINTS BEARING EARLIER REVISION DATES

REVISION DATES | SHEET X | OF X

FILE => 0400000164ga026.dgn

USERNAME => s135318 DATE PLOTTED => 04-JUN-2012 TIME PLOTTED => 16:04

DIST	COUNTY	ROUTE	POST MILES TOTAL PROJECT	SHEET No.	TOTAL SHEETS
04	Ala,CC	4,80,84, 92,238,etc.	Var	31	141

Paul Snyder 4-11-12
REGISTERED CIVIL ENGINEER DATE

6-4-12
PLANS APPROVAL DATE

REGISTERED PROFESSIONAL ENGINEER Paul A. Snyder No. 41128 Exp. 3-31-13 CIVIL STATE OF CALIFORNIA

The State of California or its officers or agents shall not be responsible for the accuracy or completeness of electronic copies of this plan sheet.

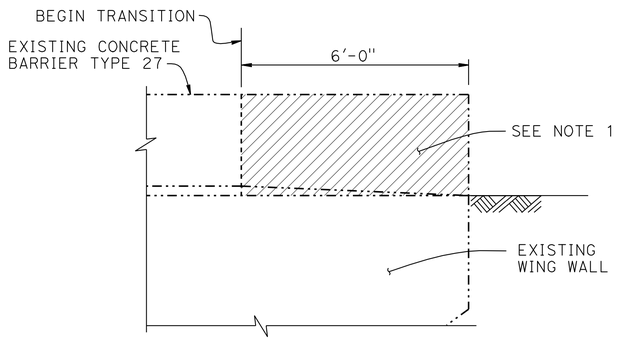

CONCRETE REMOVAL
1/2" = 1'-0"

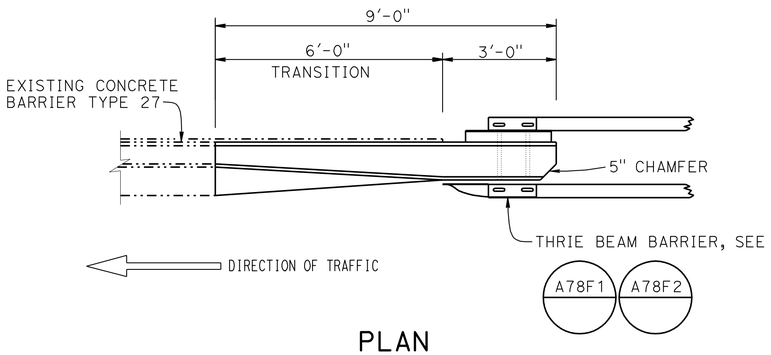

PLAN
1/2" = 1'-0"

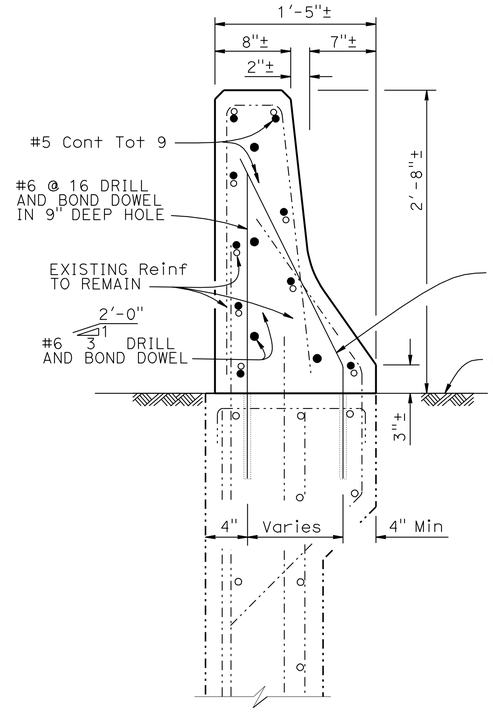

SECTION B-B
1 1/2" = 1'-0"

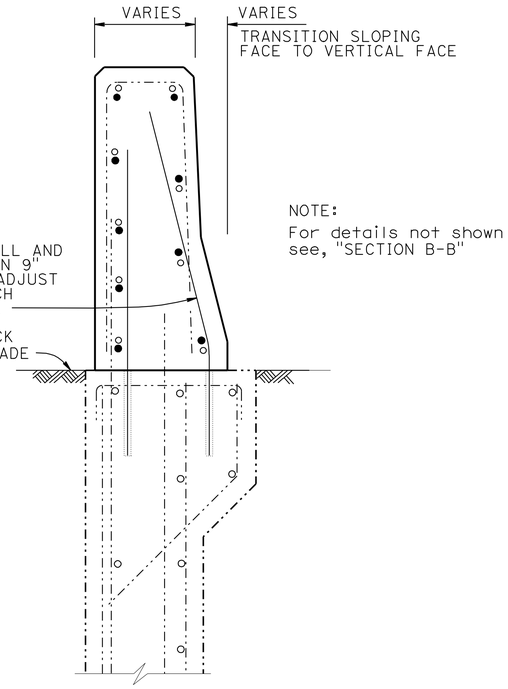

NOTE:
For details not shown see, "SECTION B-B"

SECTION C-C
1 1/2" = 1'-0"

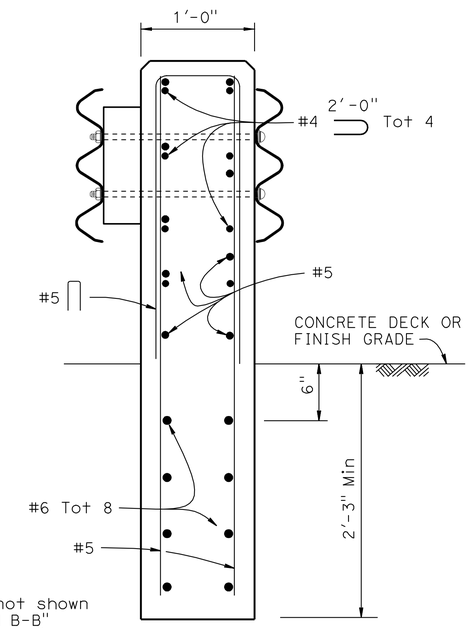

NOTE:
For details not shown see, "SECTION B-B" and "SECTION C-C"

SECTION D-D
1 1/2" = 1'-0"

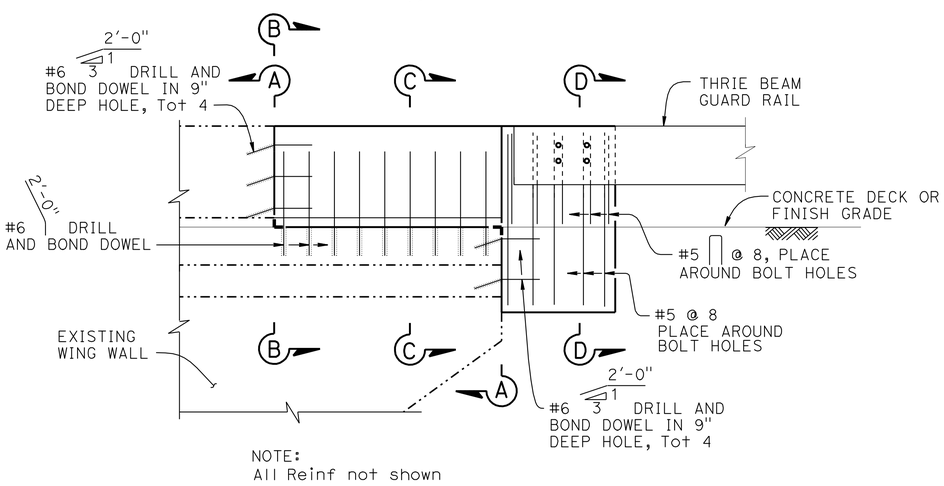

NOTE:
All Reinf not shown

ELEVATION
1/2" = 1'-0"

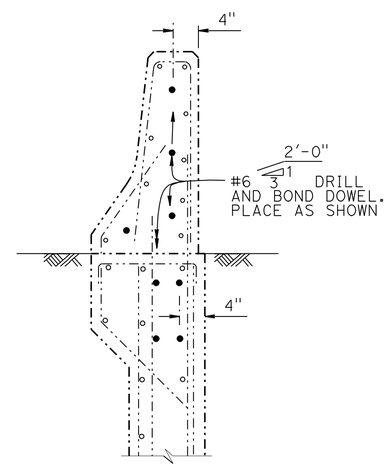

SECTION A-A
1" = 1'-0"

NOTES:

1. Cut and remove the portion of Concrete Barrier Type 27 as required. Existing reinforcement to remain
2. Wingwall reinforcement to remain

LEGEND:

- Indicates existing structure
- Indicates new construction
- Concrete removal
- Indicates Existing Reinforcement

NOTE:
THE CONTRACTOR SHALL VERIFY ALL CONTROLLING FIELD DIMENSIONS BEFORE ORDERING OR FABRICATING ANY MATERIAL.

CONSTRUCTION DETAILS
C-27

STANDARD DRAWING
FILE NO. xs16-020
APPROVAL DATE July 2011

STATE OF CALIFORNIA
DEPARTMENT OF TRANSPORTATION

DIVISION OF ENGINEERING SERVICES

BRIDGE NO. Var
POST MILE Var

CONCRETE BARRIER (TRANSITION) TO TYPE 27 BARRIER RAILING

DS OSD 2147A (ENGLISH STANDARD DRAWING "XS" BORDER REV. (02-02-11)

ORIGINAL SCALE IN INCHES FOR REDUCED PLANS 0 1 2 3

UNIT: 0727
PROJECT NUMBER & PHASE: 04 0000 0164-1 CONTRACT NO.: X

DISREGARD PRINTS BEARING EARLIER REVISION DATES

REVISION DATES | SHEET X | OF X

FILE => 0400000164ga027.dgn

USERNAME => s135318 DATE PLOTTED => 04-JUN-2012 TIME PLOTTED => 16:04

Dist	COUNTY	ROUTE	POST MILES TOTAL PROJECT	SHEET No.	TOTAL SHEETS
04	Ala,CC	4,80,84, 92,238,etc.	Var	32	141

Paul Snyder 4-11-12
REGISTERED CIVIL ENGINEER DATE

6-4-12
PLANS APPROVAL DATE

REGISTERED PROFESSIONAL ENGINEER Paul Alan Snyder No. 41128 Exp. 3-31-13 CIVIL STATE OF CALIFORNIA

THE STATE OF CALIFORNIA OR ITS OFFICERS OR AGENTS SHALL NOT BE RESPONSIBLE FOR THE ACCURACY OR COMPLETENESS OF SCANNED COPIES OF THIS PLAN SHEET.

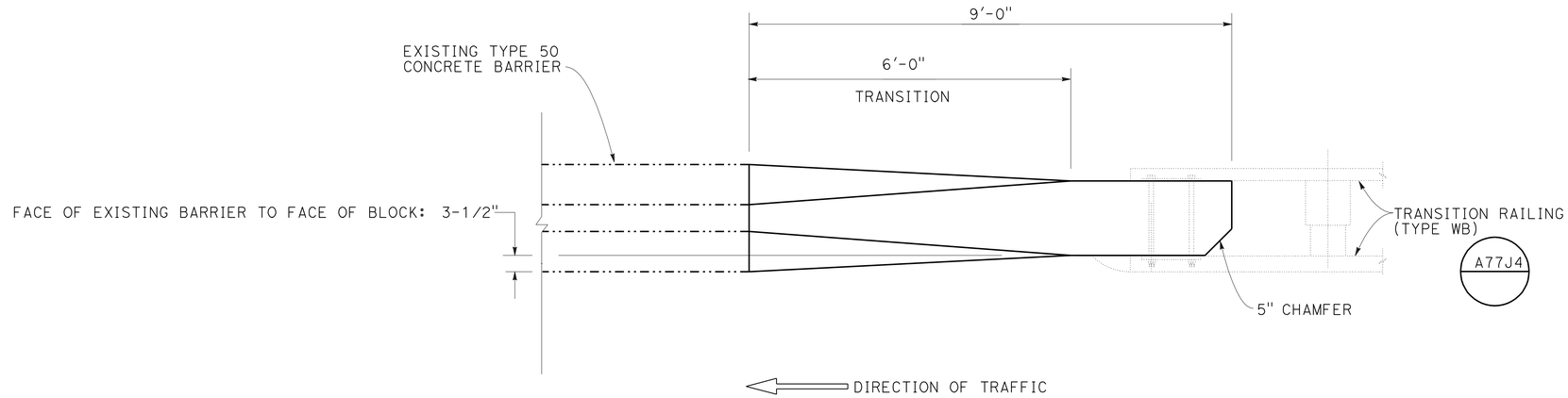

PLAN
3/4" = 1'-0"

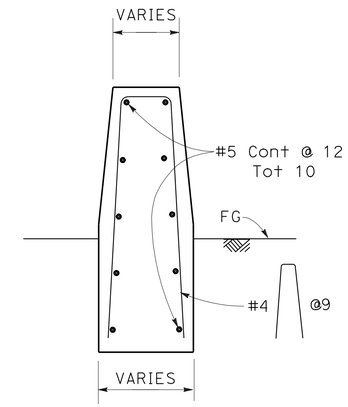

SECTION E-E
3/4" = 1'-0"

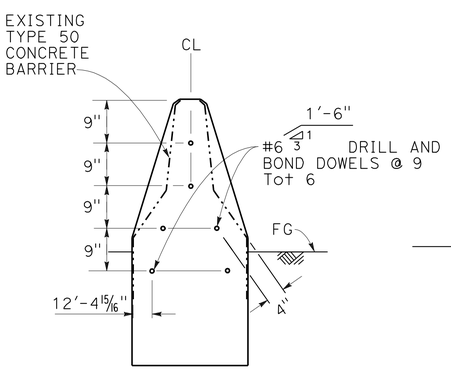

SECTION C-C
3/4" = 1'-0"

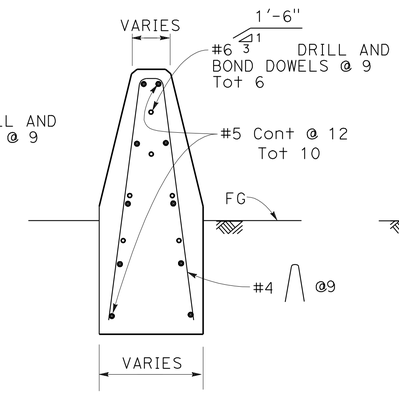

SECTION D-D
3/4" = 1'-0"

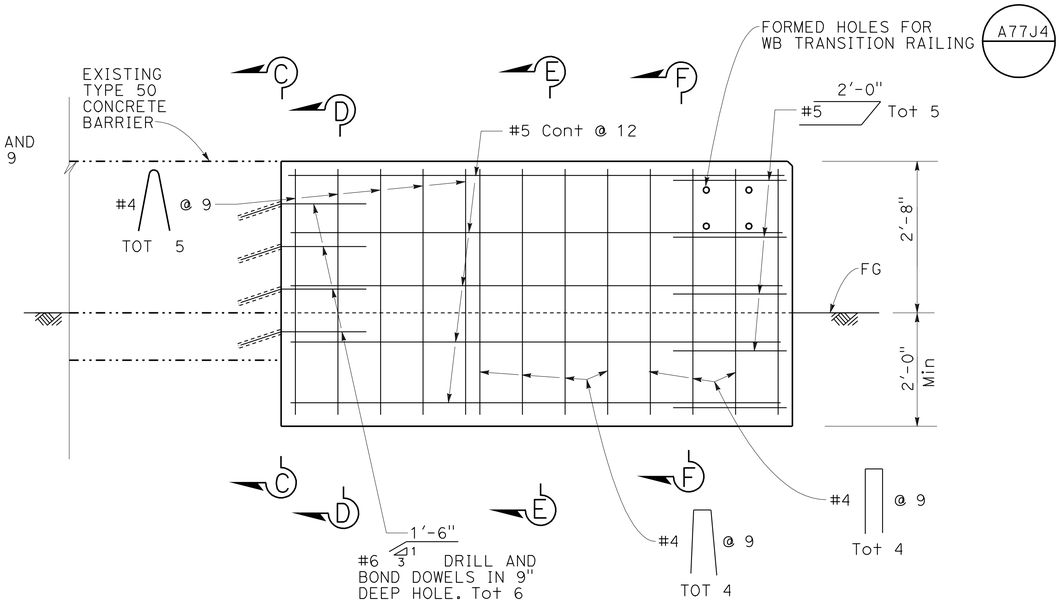

ELEVATION
3/4" = 1'-0"

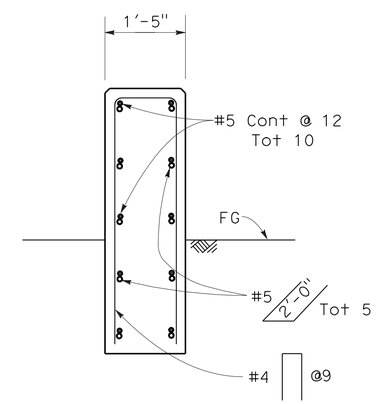

SECTION F-F
3/4" = 1'-0"

NOTE:
THE CONTRACTOR SHALL VERIFY ALL CONTROLLING FIELD DIMENSIONS BEFORE ORDERING OR FABRICATING ANY MATERIAL.

LEGEND:
INDICATES EXISTING STRUCTURE
INDICATES NEW STRUCTURE

CONSTRUCTION DETAILS
CONCRETE BARRIER (TRANSITION)
TO TYPE 50 CONCRETE BARRIER
NO SCALE

C-28

STATE OF CALIFORNIA - DEPARTMENT OF TRANSPORTATION
Caltrans
DESIGN
FUNCTIONAL SUPERVISOR ALBERT J. ZEPEDA
CALCULATED-DESIGNED BY
CHECKED BY
REVISED BY
DATE REVISED

LAST REVISION 04-11-12
DATE PLOTTED => 04-JUN-2012
TIME PLOTTED => 16:04

Dist	COUNTY	ROUTE	POST MILES TOTAL PROJECT	SHEET No.	TOTAL SHEETS
04	Ala,CC	4,80,84, 92,238,etc.	Var	33	141

Paul Snyder 4-11-12
REGISTERED CIVIL ENGINEER DATE

6-4-12
PLANS APPROVAL DATE

REGISTERED PROFESSIONAL ENGINEER
Paul Alan Snyder
No. 41128
Exp. 3-31-13
CIVIL
STATE OF CALIFORNIA

THE STATE OF CALIFORNIA OR ITS OFFICERS OR AGENTS SHALL NOT BE RESPONSIBLE FOR THE ACCURACY OR COMPLETENESS OF SCANNED COPIES OF THIS PLAN SHEET.

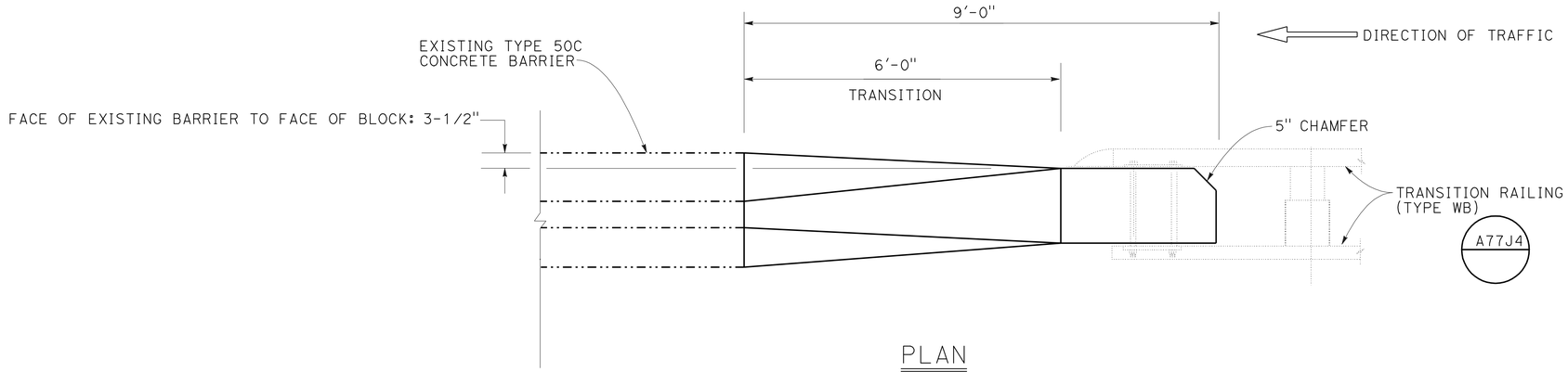

PLAN
¾" = 1'-0"

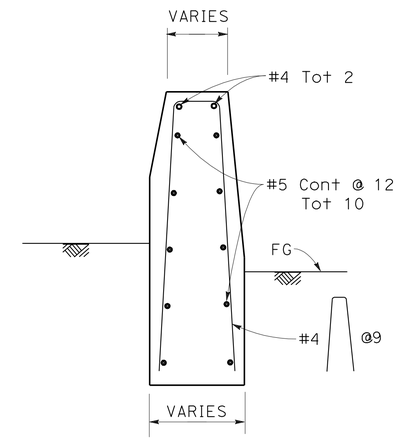

SECTION E-E
¾" = 1'-0"

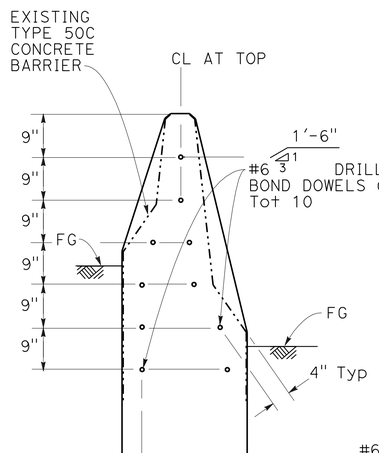

SECTION C-C
¾" = 1'-0"

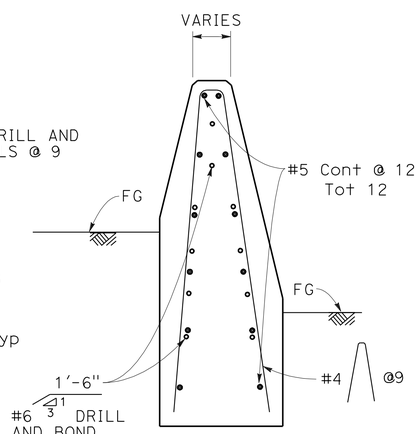

SECTION D-D
¾" = 1'-0"

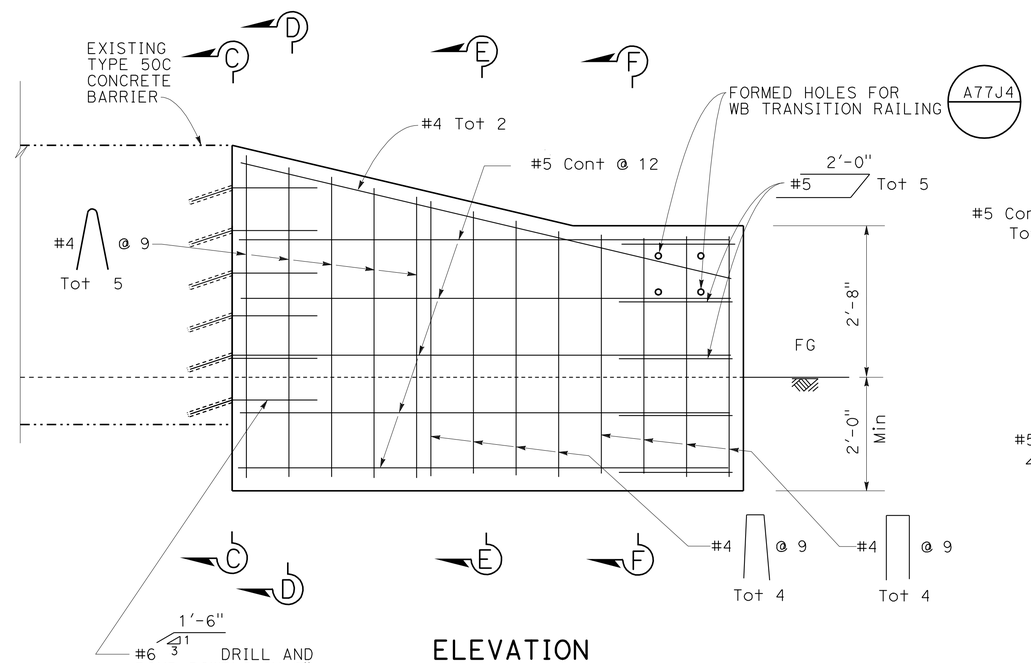

ELEVATION
¾" = 1'-0"

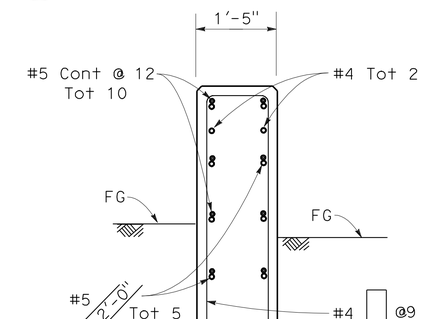

SECTION F-F
¾" = 1'-0"

NOTE:
THE CONTRACTOR SHALL VERIFY ALL CONTROLLING FIELD DIMENSIONS BEFORE ORDERING OR FABRICATING ANY MATERIAL.

LEGEND:
INDICATES EXISTING STRUCTURE
INDICATES NEW STRUCTURE

CONSTRUCTION DETAILS
CONCRETE BARRIER (TRANSITION)
TO TYPE 50C CONCRETE BARRIER
NO SCALE

C-29

REVISED BY	DATE REVISED
-	-
-	-

CALCULATED-DESIGNED BY
CHECKED BY
FUNCTIONAL SUPERVISOR ALBERT J. ZEPEDA

STATE OF CALIFORNIA - DEPARTMENT OF TRANSPORTATION
Caltrans
DESIGN

LAST REVISION 04-11-12
DATE PLOTTED => 04-JUN-2012
TIME PLOTTED => 16:04

Dist	COUNTY	ROUTE	POST MILES TOTAL PROJECT	SHEET No.	TOTAL SHEETS
04	Ala,CC	4,80,84, 92,238,etc.	Var	34	141

Paul Snyder 4-11-12
REGISTERED CIVIL ENGINEER DATE

6-4-12
PLANS APPROVAL DATE

REGISTERED PROFESSIONAL ENGINEER Paul Alan Snyder No. 41128 Exp. 3-31-13 CIVIL STATE OF CALIFORNIA

THE STATE OF CALIFORNIA OR ITS OFFICERS OR AGENTS SHALL NOT BE RESPONSIBLE FOR THE ACCURACY OR COMPLETENESS OF SCANNED COPIES OF THIS PLAN SHEET.

NOTES:

1. USE 5/8'' ø BUTTON HEAD BOLTS AND HEX NUTS FOR CONNECTIONS TO POSTS. NO WASHER ON RAIL FACE FOR BOLTED CONNECTIONS TO POST.
2. THE NESTED RAIL ELEMENTS AND "W" BEAM TO THRIE BEAM ELEMENT MAY BE SPLICED TOGETHER PRIOR TO BOLTING THE ELEMENTS TO THE WOOD POST AND CONCRETE BARRIER OR RAILING.
3. EXTERIOR SPLICE BOLT HOLES FOR RAIL ELEMENT SPLICES AT POST No.T4 AND THE CONNECTION TO THE CONCRETE BARRIER OR RAILING SHALL BE THE STANDARD 29/32'' x 1 1/8'' SLOT SIZE. INTERIOR SPLICE BOLT HOLES AT THESE LOCATIONS MAY BE INCREASED UP TO 1 1/4'' ø. ONLY THE TOP 2 AND THE BOTTOM 2 SPLICE BOLTS WITH WASHERS AND NUTS ARE REQUIRED FOR RAIL SPLICES AT POST No.T4 AND THE CONNECTION TO THE CONCRETE BARRIER OR RAILING.
4. DIRECTION OF ADJACENT TRAFFIC INDICATED BY ➔ .
5. THE TOP ELEVATION OF POST Nos.T2 THROUGH T7 SHALL NOT PROJECT MORE THAN 1'' ABOVE THE TOP ELEVATION OF THE RAIL ELEMENT.
6. WHERE BEVELED METAL BOX SPACER IS INSTALLED, PLACE 1 1/4'' ø x 3 1/4'' AND 1 1/4'' ø X 2'' PIPE SPACERS ON 1'' HS BOLTS PASSING THROUGH INTERIOR OF BOX.
7. FOR DETAILS OF CONCRETE BARRIER TYPE 60, SEE REVISED STANDARD PLAN RSP A76A AND STANDARD PLAN A76B.
8. FOR ADDITIONAL THRIE BEAM BARRIER DETAILS, SEE STANDARD PLAN A78A, REVISED STANDARD PLANS RSPS A78B AND A78C1, AND STANDARD PLAN A78C2.

LEGEND:

(A) NESTED THRIE BEAM ELEMENTS (ONE 12 GAGE ELEMENT NESTED OVER ONE 10 GAGE ELEMENT).

(B) ONE 10 GAGE "W" BEAM TO THRIE BEAM ELEMENT.

(C) ONE 12 GAGE THRIE BEAM ELEMENT.

(D) ONE 10 GAGE "W" BEAM RAIL ELEMENT (7'-3 1/2'' LENGTH)

10 GAGE = 0.135'' THICK

12 GAGE = 0.108'' THICK

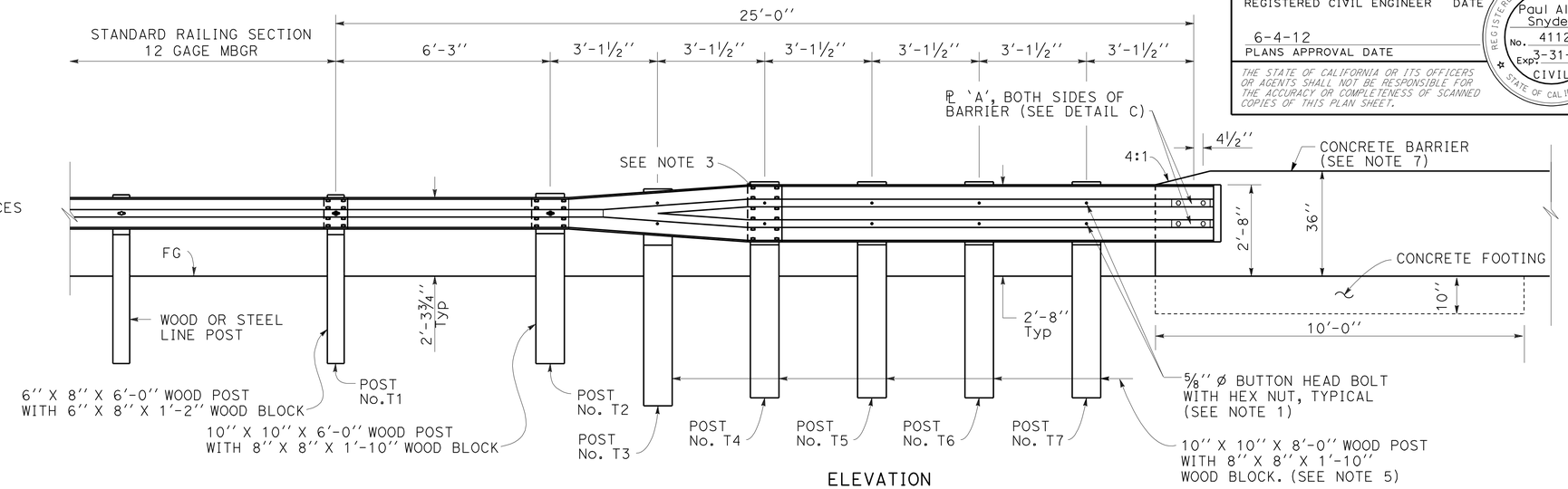

ELEVATION

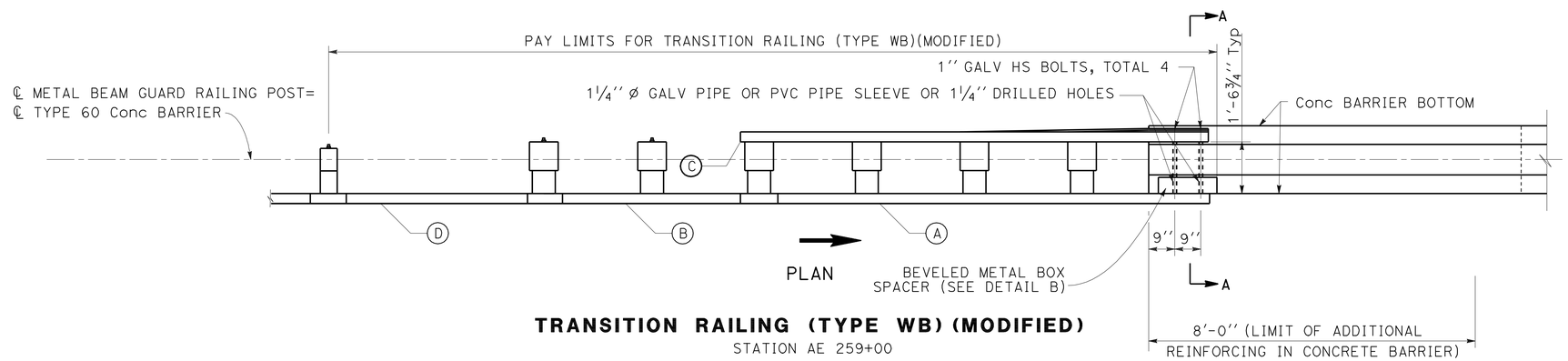

TRANSITION RAILING (TYPE WB) (MODIFIED)

STATION AE 259+00

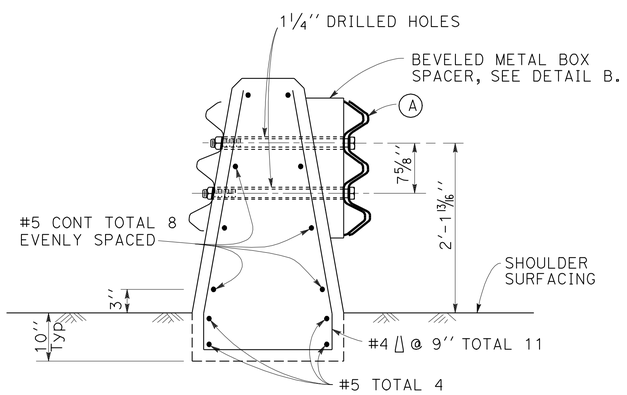

SECTION A-A

(TYPE 60 CONCRETE BARRIER)

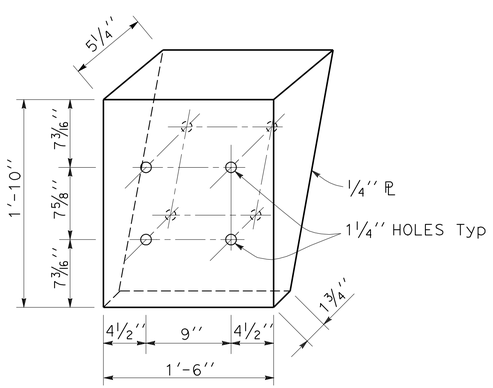

DETAIL B

BEVELED METAL BOX SPACER

SEE NOTE 6

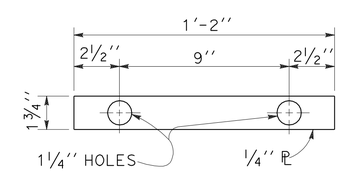

DETAIL C

PLATE "A"

CONSTRUCTION DETAILS
METAL BEAM GUARD RAIL CONNECTION TO CONCRETE BARRIER (TYPE 60)

NO SCALE

C-30

STATE OF CALIFORNIA - DEPARTMENT OF TRANSPORTATION
DESIGN
Caltrans
FUNCTIONAL SUPERVISOR: ALBERT J. ZEPEDA
CALCULATED-DESIGNED BY | CHECKED BY
REVISED BY | DATE REVISED

LAST REVISION 04-13-12 | DATE PLOTTED => 04-JUN-2012 | TIME PLOTTED => 16:04

Dist	COUNTY	ROUTE	POST MILES TOTAL PROJECT	SHEET No.	TOTAL SHEETS
04	Ala,CC	4,80,84, 92,238,etc.	Var	35	141

Paul Snyder 4-11-12
REGISTERED CIVIL ENGINEER DATE

6-4-12
PLANS APPROVAL DATE

REGISTERED PROFESSIONAL ENGINEER Paul Alan Snyder No. 41128 Exp. 3-31-13 CIVIL STATE OF CALIFORNIA

THE STATE OF CALIFORNIA OR ITS OFFICERS OR AGENTS SHALL NOT BE RESPONSIBLE FOR THE ACCURACY OR COMPLETENESS OF SCANNED COPIES OF THIS PLAN SHEET.

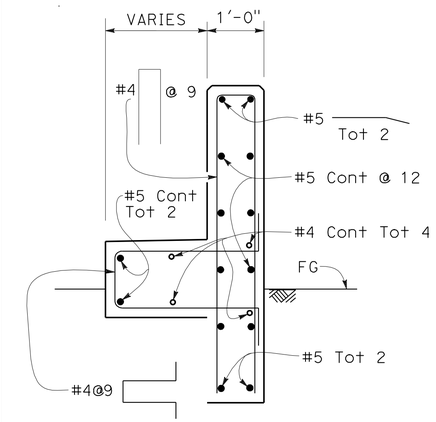

SECTION D-D

3/4" = 1'-0"

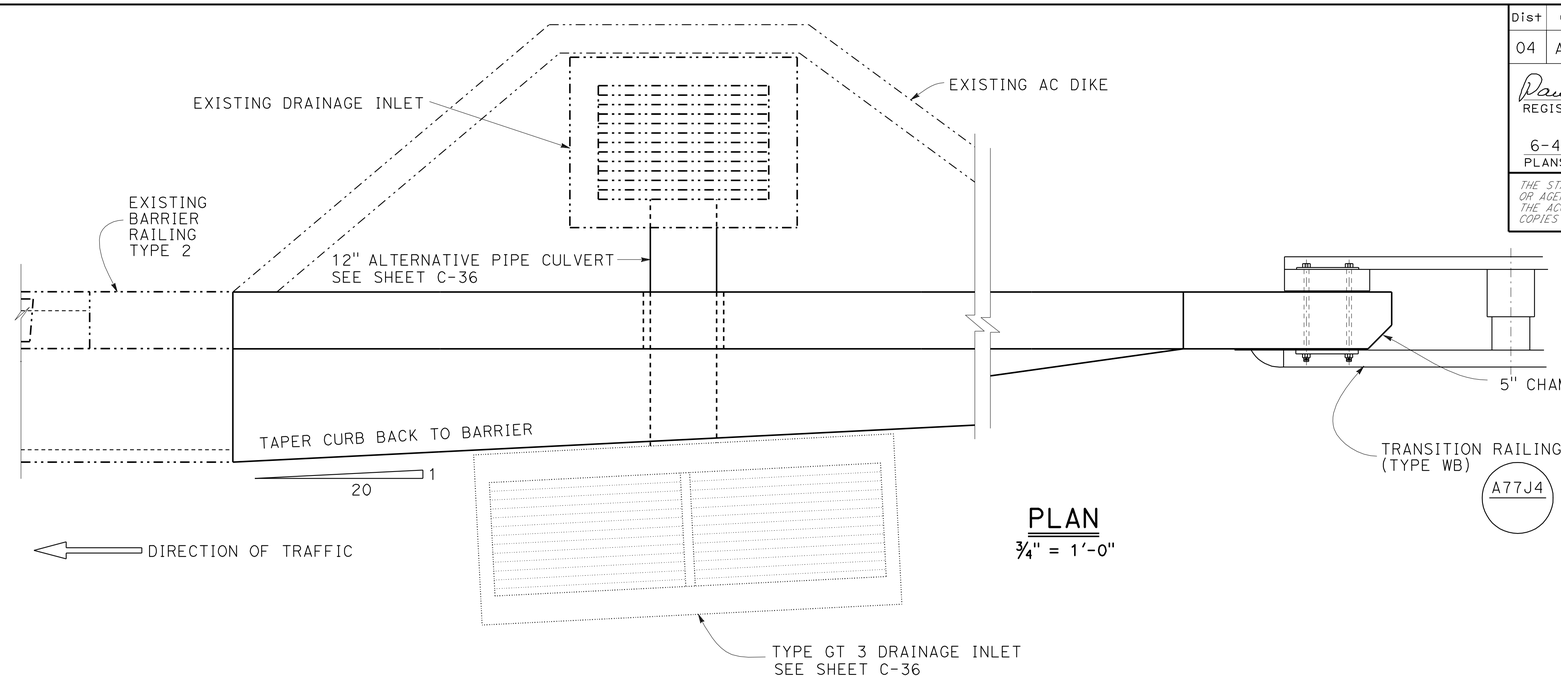

PLAN

3/4" = 1'-0"

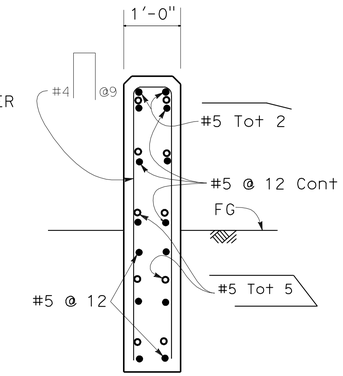

SECTION G-G

3/4" = 1'-0"

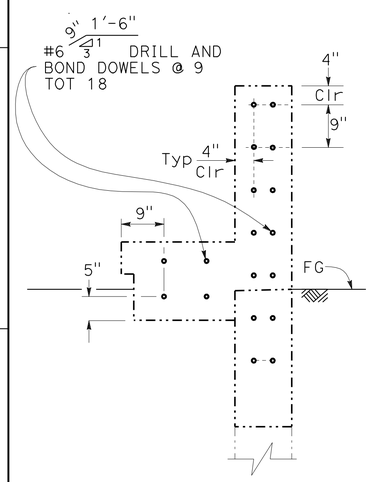

SECTION C-C

3/4" = 1'-0"

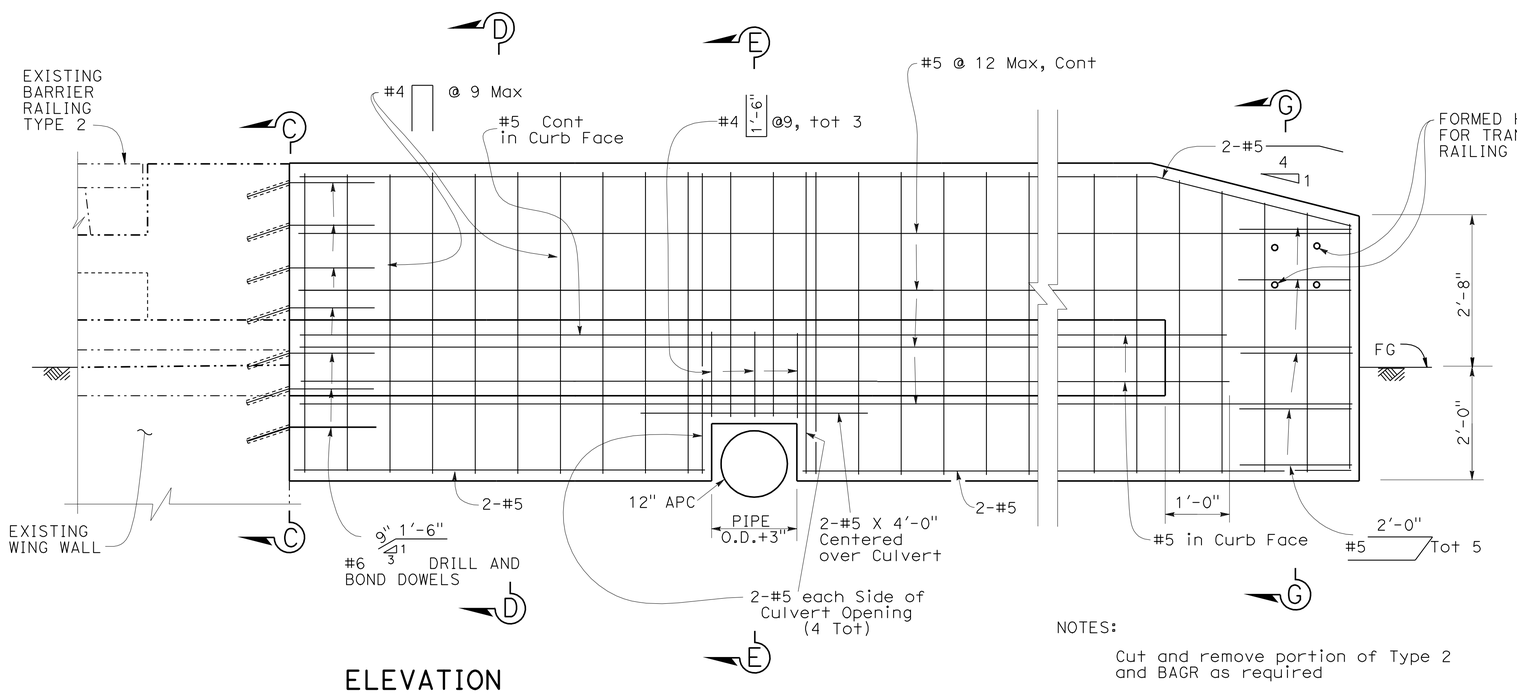

ELEVATION

3/4" = 1'-0"

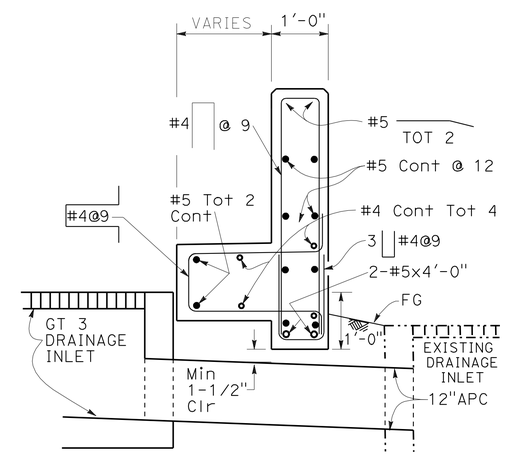

SECTION E-E

3/4" = 1'-0"

NOTE:
THE CONTRACTOR SHALL VERIFY ALL CONTROLLING FIELD DIMENSIONS BEFORE ORDERING OR FABRICATING ANY MATERIAL.

NOTES:

Cut and remove portion of Type 2 and BAGR as required

LEGEND:

Indicates Existing Structure

Indicates New Structure

CONSTRUCTION DETAILS

CONCRETE BARRIER (TRANSITION)
TO TYPE 2 BARRIER AT N FLYNN RD OC

NO SCALE

C-31

STATE OF CALIFORNIA - DEPARTMENT OF TRANSPORTATION
DESIGN
FUNCTIONAL SUPERVISOR: ALBERT J. ZEPEDA
CALCULATED-DESIGNED BY
CHECKED BY
REVISED BY
DATE REVISED

LAST REVISION 04-11-12
DATE PLOTTED => 04-JUN-2012
TIME PLOTTED => 16:04

Dist	COUNTY	ROUTE	POST MILES TOTAL PROJECT	SHEET No.	TOTAL SHEETS
04	Ala,CC	4,80,84, 92,238,*etc.*	Var	36	141

Paul Snyder
REGISTERED CIVIL ENGINEER DATE

6-4-12
PLANS APPROVAL DATE

REGISTERED PROFESSIONAL ENGINEER
Paul Alan Snyder
No. 41128
Exp. 3-31-13
CIVIL
STATE OF CALIFORNIA

THE STATE OF CALIFORNIA OR ITS OFFICERS OR AGENTS SHALL NOT BE RESPONSIBLE FOR THE ACCURACY OR COMPLETENESS OF SCANNED COPIES OF THIS PLAN SHEET.

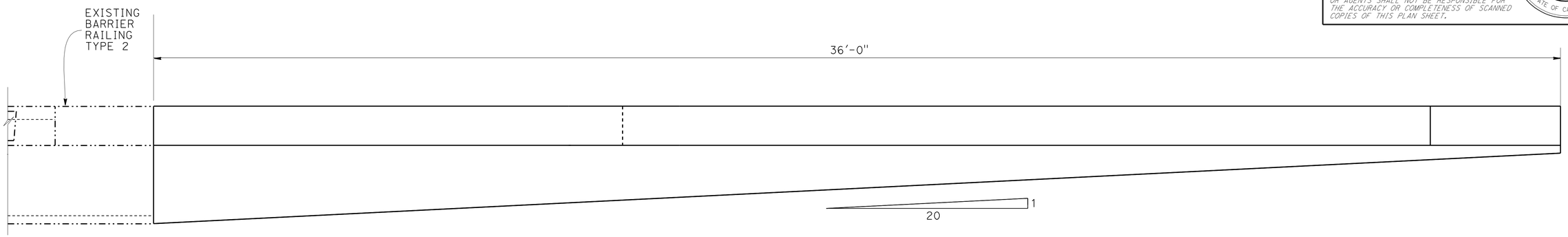

DIRECTION OF TRAFFIC

PLAN

3/4" = 1'-0"

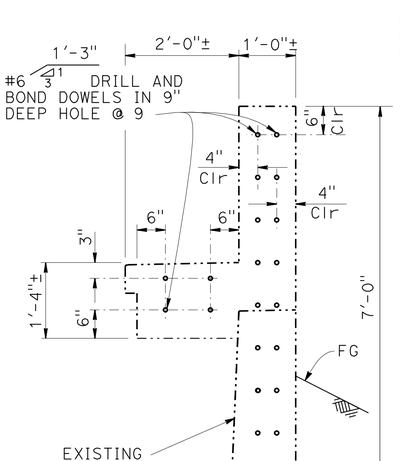

SECTION C-C

3/4" = 1'-0"

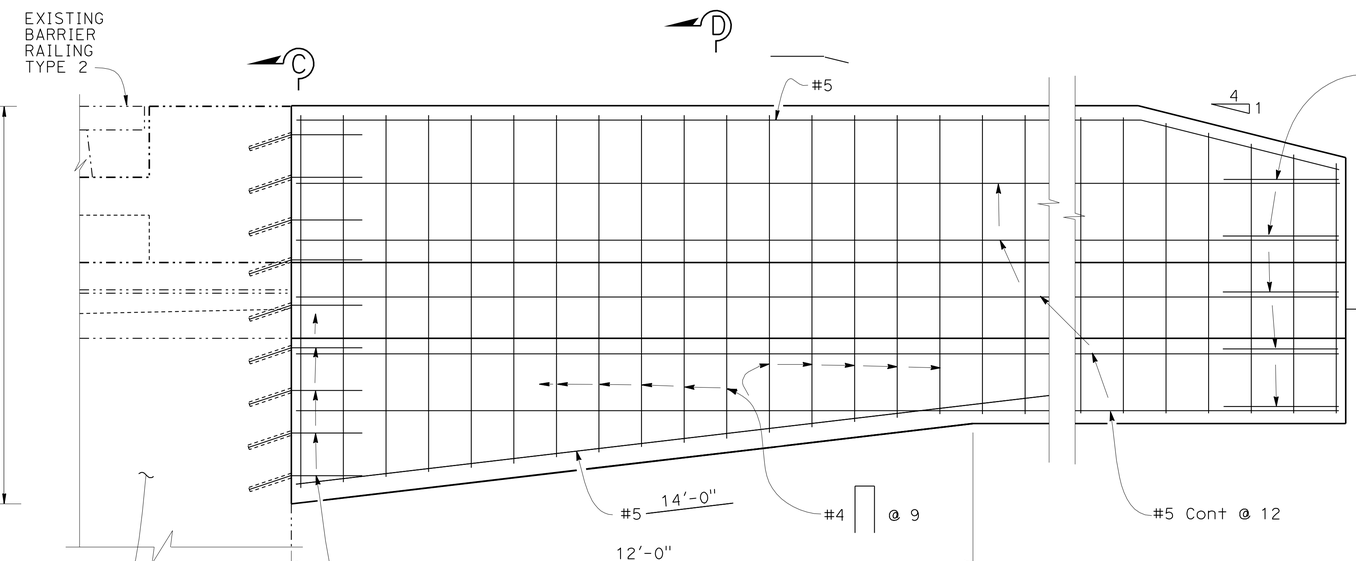

ELEVATION

3/4" = 1'-0"

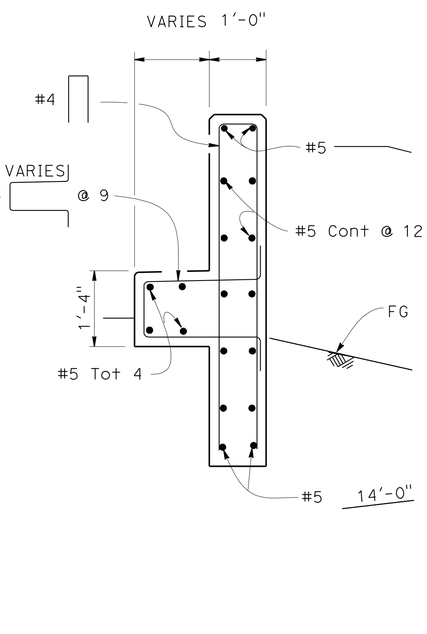

SECTION D-D

3/4" = 1'-0"

NOTE:
THE CONTRACTOR SHALL VERIFY ALL CONTROLLING FIELD DIMENSIONS BEFORE ORDERING OR FABRICATING ANY MATERIAL.

NOTES:

Cut and remove portion of Type 2 and BAGR as required

LEGEND:

-·-·- Indicates Existing Structure

——— Indicates New Structure

CONSTRUCTION DETAILS

CONCRETE BARRIER (TRANSITION)
AT LOCATION 80

NO SCALE

C-32

STATE OF CALIFORNIA - DEPARTMENT OF TRANSPORTATION
Caltrans®
DESIGN
FUNCTIONAL SUPERVISOR: ALBERT J. ZEPEDA
CALCULATED-DESIGNED BY
CHECKED BY
REVISED BY
DATE REVISED

LAST REVISION 04-11-12
DATE PLOTTED => 04-JUN-2012
TIME PLOTTED => 16:04

Dist	COUNTY	ROUTE	POST MILES TOTAL PROJECT	SHEET No.	TOTAL SHEETS
04	Ala,CC	4,80,84, 92,238,*etc.*	Var	37	141

Paul Snyder 4-11-12
REGISTERED CIVIL ENGINEER DATE

6-4-12
PLANS APPROVAL DATE

REGISTERED PROFESSIONAL ENGINEER
Paul Alan Snyder
No. 41128
Exp. 3-31-13
CIVIL
STATE OF CALIFORNIA

THE STATE OF CALIFORNIA OR ITS OFFICERS OR AGENTS SHALL NOT BE RESPONSIBLE FOR THE ACCURACY OR COMPLETENESS OF SCANNED COPIES OF THIS PLAN SHEET.

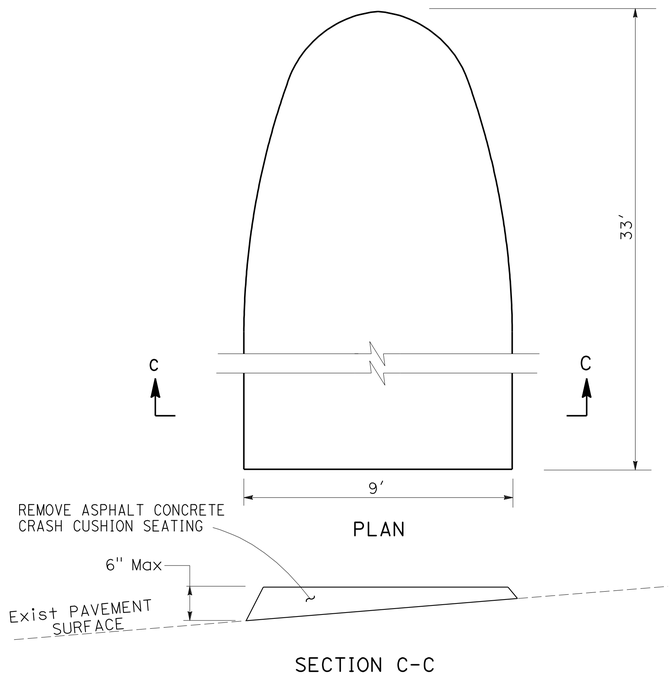

DETAIL - 2
COLD PLANE ASPHALT CONCRETE PAVEMENT
LOCATION 82 (2)
EB ROUTE 580 OFF-RAMP TO HARRISON St & OAKLAND Ave

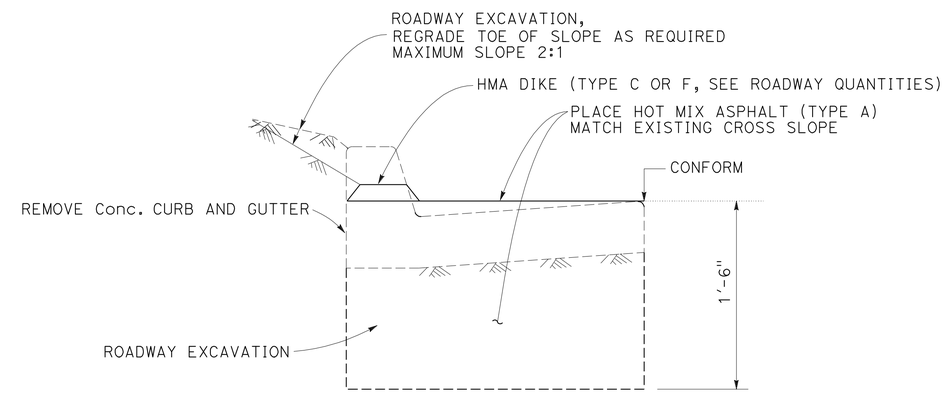

DETAIL - 3

REPLACE CONCRETE CURB AND GUTTER WITH HOT MIX ASPHALT (TYPE A)

CONSTRUCTION DETAILS
NO SCALE

C-33

REVISED BY	DATE REVISED
-	-

CALCULATED-DESIGNED BY	CHECKED BY
-	-

FUNCTIONAL SUPERVISOR: ALBERT J. ZEPEDA

STATE OF CALIFORNIA - DEPARTMENT OF TRANSPORTATION
Caltrans
DESIGN

LAST REVISION 04-11-12
DATE PLOTTED => 04-JUN-2012
TIME PLOTTED => 16:03

Dist	COUNTY	ROUTE	POST MILES TOTAL PROJECT	SHEET No.	TOTAL SHEETS
04	Ala,CC	4,80,84, 92,238,etc.	Var	38	141

Paul Snyder 4-11-12
REGISTERED CIVIL ENGINEER DATE

6-4-12
PLANS APPROVAL DATE

REGISTERED PROFESSIONAL ENGINEER
Paul Alan Snyder
No. 41128
Exp. 3-31-13
CIVIL
STATE OF CALIFORNIA

THE STATE OF CALIFORNIA OR ITS OFFICERS OR AGENTS SHALL NOT BE RESPONSIBLE FOR THE ACCURACY OR COMPLETENESS OF SCANNED COPIES OF THIS PLAN SHEET.

LEGEND:

E MBGR DELINEATOR (TYPE E), 2 WAY TRAFFIC, 2 LANE HIGHWAYS

F MBGR DELINEATOR (TYPE F), RIGHT SIDE OF TRAFFIC

G MBGR DELINEATOR (TYPE G), LEFT SIDE OF TRAFFIC

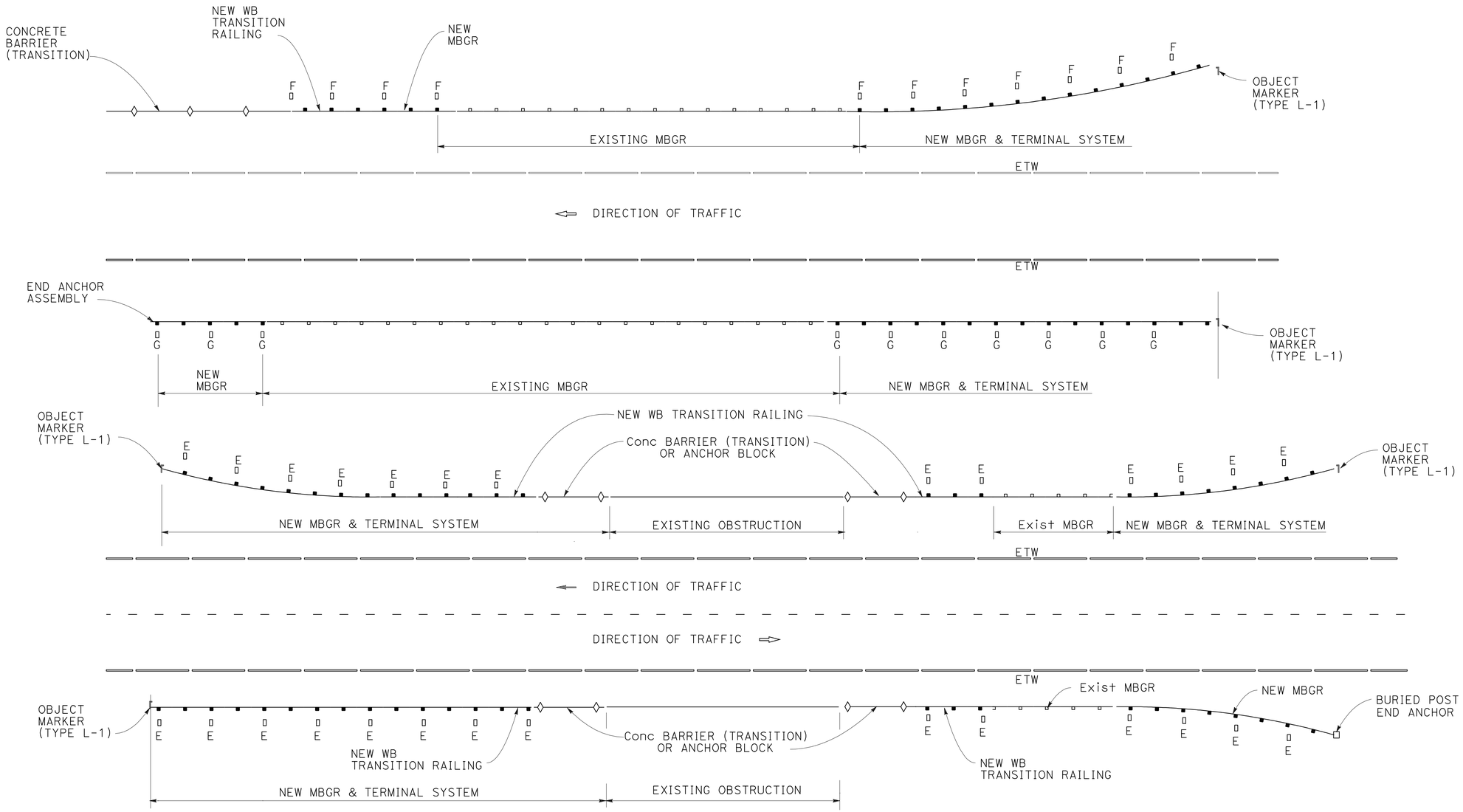

OBJECT MARKER AND MBGR DELINEATOR PLACEMENT AT NEW MBGR

NOTE:

PLACE DELINEATORS AT FIRST AND LAST POST OF NEW MBGR AND AT 12.5' Max SPACING BETWEEN.

CONSTRUCTION DETAILS

NO SCALE

C-34

STATE OF CALIFORNIA - DEPARTMENT OF TRANSPORTATION
Caltrans
DESIGN

FUNCTIONAL SUPERVISOR: ALBERT J. ZEPEDA

CALCULATED-DESIGNED BY | CHECKED BY

REVISED BY | DATE REVISED

LAST REVISION 04-13-12 | DATE PLOTTED => 04-JUN-2012 | TIME PLOTTED => 16:04

Dist	COUNTY	ROUTE	POST MILES TOTAL PROJECT	SHEET No.	TOTAL SHEETS
04	Ala,CC	4,80,84, 92,238,etc.	Var	39	141

Paul Snyder 4-11-12
REGISTERED CIVIL ENGINEER DATE

6-4-12
PLANS APPROVAL DATE

REGISTERED PROFESSIONAL ENGINEER
Paul Alan Snyder
No. 41128
Exp. 3-31-13
CIVIL
STATE OF CALIFORNIA

THE STATE OF CALIFORNIA OR ITS OFFICERS OR AGENTS SHALL NOT BE RESPONSIBLE FOR THE ACCURACY OR COMPLETENESS OF SCANNED COPIES OF THIS PLAN SHEET.

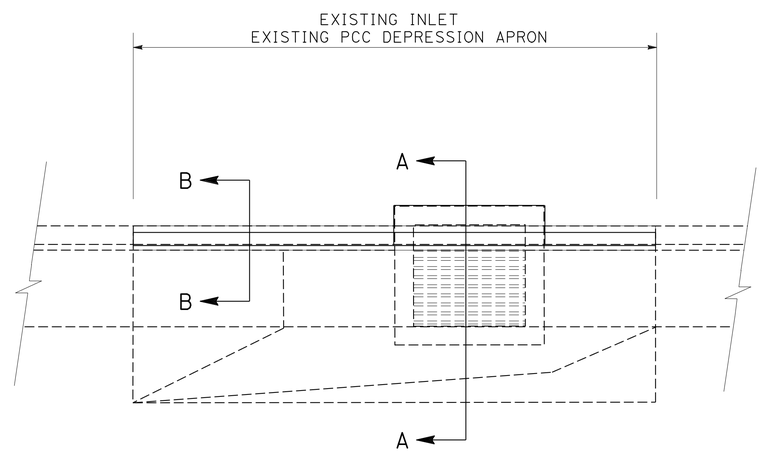

PLAN VIEW

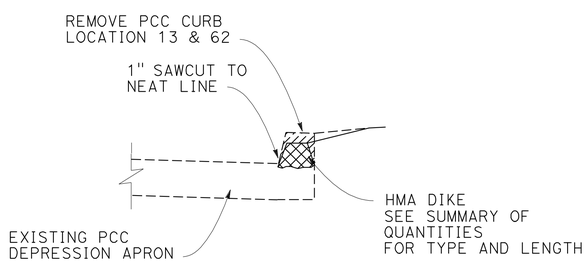

SECTION B-B

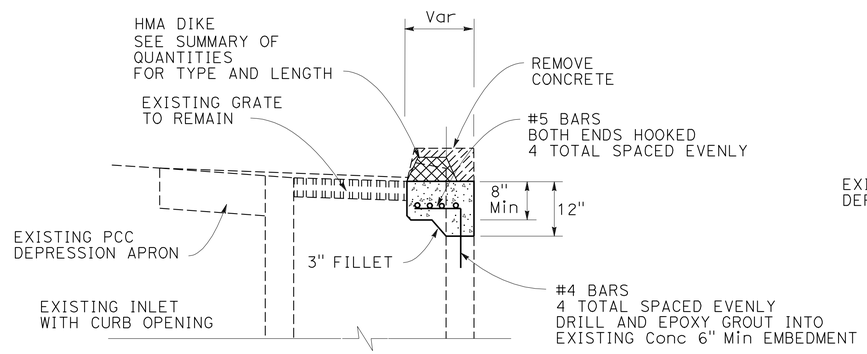

SECTION A-A
LOCATION 13, 49, 125

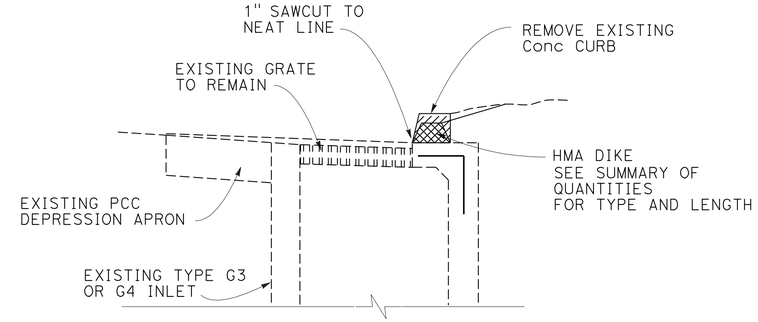

SECTION A-A
LOCATION 62

ADJUST INLET
LOCATION 13, 49, 62 & 125

CONSTRUCTION DETAILS
NO SCALE

C-35

STATE OF CALIFORNIA - DEPARTMENT OF TRANSPORTATION
Caltrans
DESIGN
FUNCTIONAL SUPERVISOR: ALBERT J. ZEPEDA
CALCULATED-DESIGNED BY
CHECKED BY
REVISED BY
DATE REVISED

LAST REVISION 04-11-12 | DATE PLOTTED => 04-JUN-2012 | TIME PLOTTED => 16:04

Dist	COUNTY	ROUTE	POST MILES TOTAL PROJECT	SHEET No.	TOTAL SHEETS
04	Ala,CC	4,80,84, 92,238,etc.	Var	40	141

Paul Snyder 4-11-12
REGISTERED CIVIL ENGINEER DATE

6-4-12
PLANS APPROVAL DATE

REGISTERED PROFESSIONAL ENGINEER
Paul Alan Snyder
No. 41128
Exp. 3-31-13
CIVIL
STATE OF CALIFORNIA

THE STATE OF CALIFORNIA OR ITS OFFICERS OR AGENTS SHALL NOT BE RESPONSIBLE FOR THE ACCURACY OR COMPLETENESS OF SCANNED COPIES OF THIS PLAN SHEET.

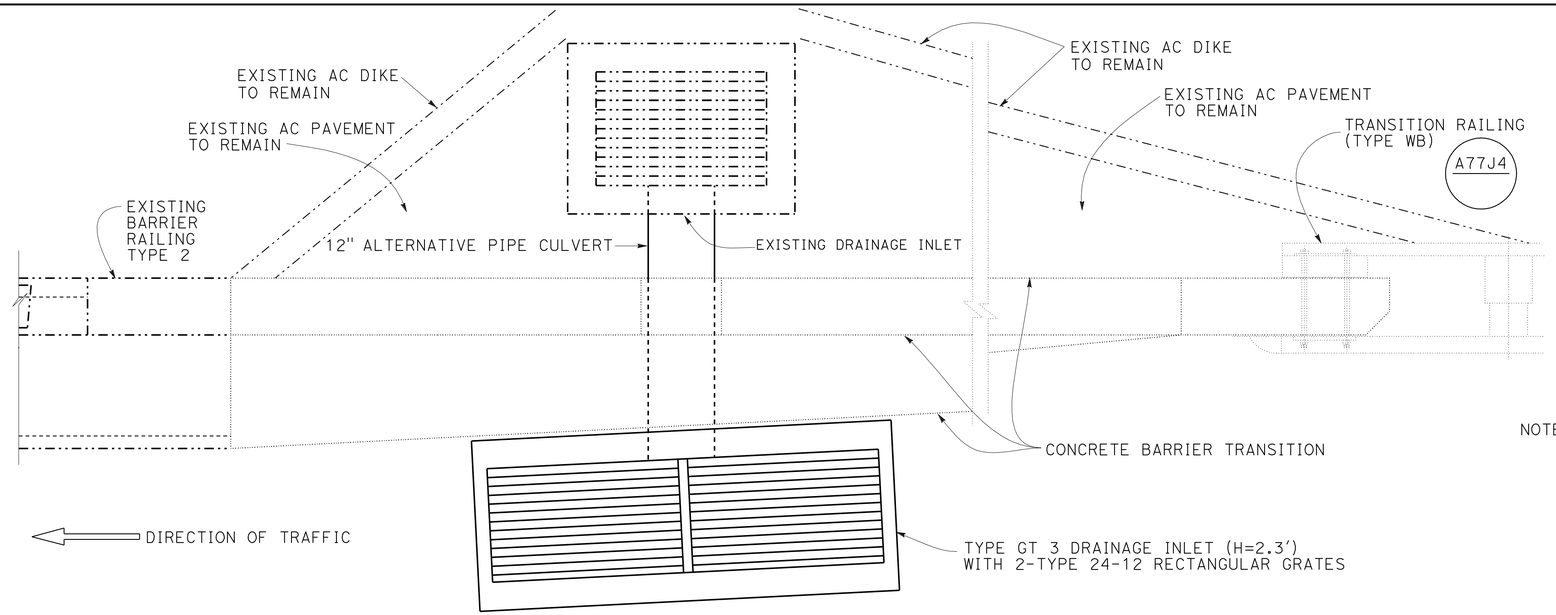

NOTE: 12" ALTERNATIVE PIPE CULVERT SHALL BE PLASTIC PIPE OR RCP.

PLAN
DRAINAGE DETAILS AT LOCATION 51(1), NORTH FLYNN ROAD OVERCROSSING

3/4" = 1'-0"

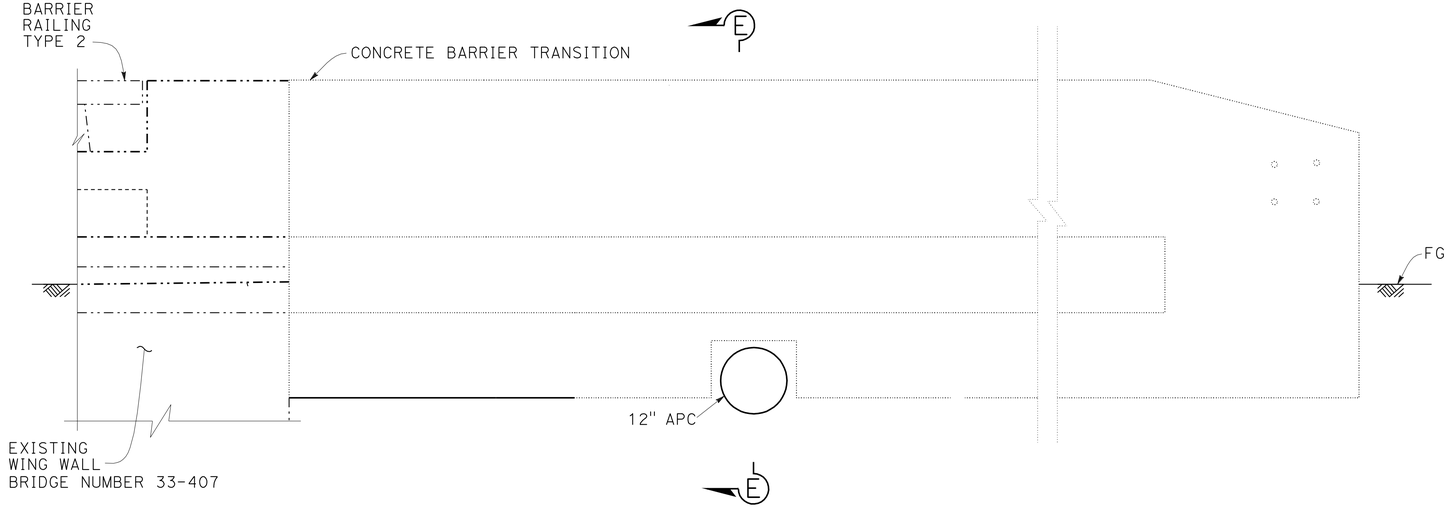

ELEVATION
3/4" = 1'-0"

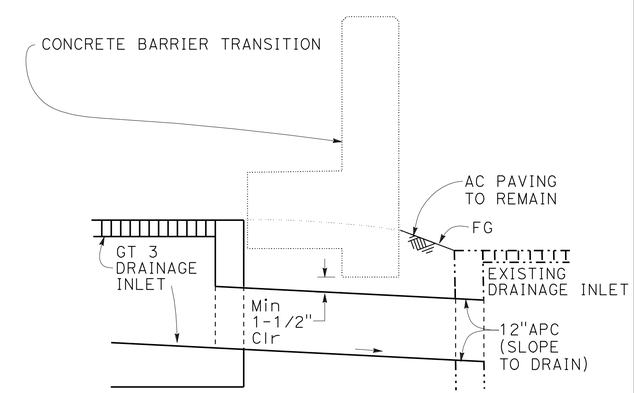

SECTION E-E
3/4" = 1'-0"

LEGEND:

··-··- Indicates Existing Structure

——— Indicates New Structure

NOTE:
THE CONTRACTOR SHALL VERIFY ALL CONTROLLING FIELD DIMENSIONS BEFORE ORDERING OR FABRICATING ANY MATERIAL.

CONSTRUCTION DETAILS
DRAINAGE DETAILS AT LOCATION 51(1)
NORTH FLYNN ROAD OVERCROSSING

NO SCALE

C-36

REVISED BY | DATE REVISED
CALCULATED-DESIGNED BY | CHECKED BY
FUNCTIONAL SUPERVISOR: ALBERT J. ZEPEDA
STATE OF CALIFORNIA - DEPARTMENT OF TRANSPORTATION
Caltrans
DESIGN

LAST REVISION 04-11-12 | DATE PLOTTED => 04-JUN-2012 | TIME PLOTTED => 16:04

Dist	COUNTY	ROUTE	POST MILES TOTAL PROJECT	SHEET No.	TOTAL SHEETS
04	Ala,CC	4,80,84, 92,238,etc.	Var	41	141

LICENSED LANDSCAPE ARCHITECT

6-4-12
PLANS APPROVAL DATE

LICENSED LANDSCAPE ARCHITECT
DAVID WARREN YAM No. 4703
Signature
11-30-13
Renewal date
04-09-12
Date
STATE OF CALIFORNIA

THE STATE OF CALIFORNIA OR ITS OFFICERS OR AGENTS SHALL NOT BE RESPONSIBLE FOR THE ACCURACY OR COMPLETENESS OF SCANNED COPIES OF THIS PLAN SHEET.

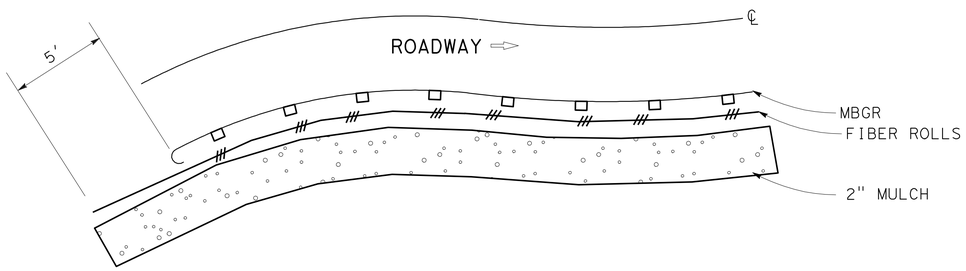

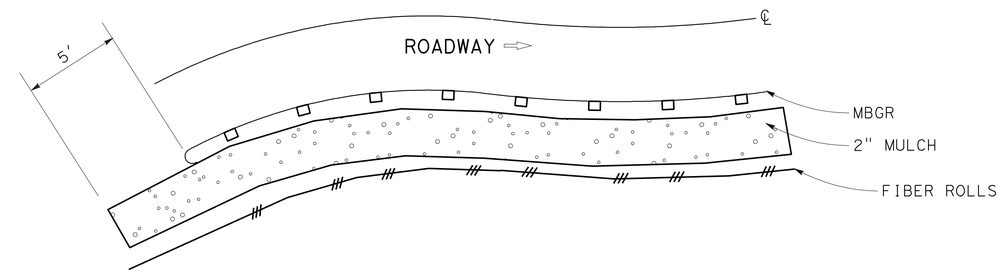

TYPICAL PLAN

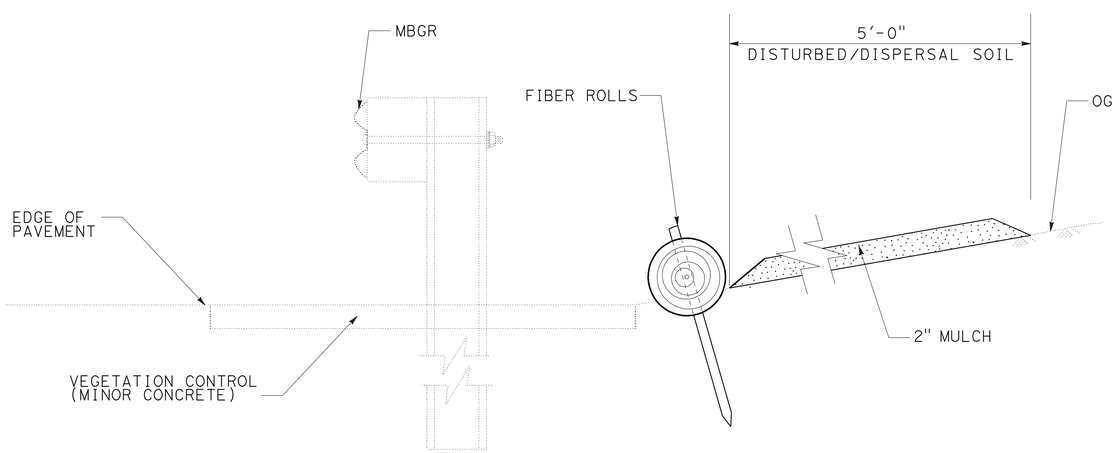

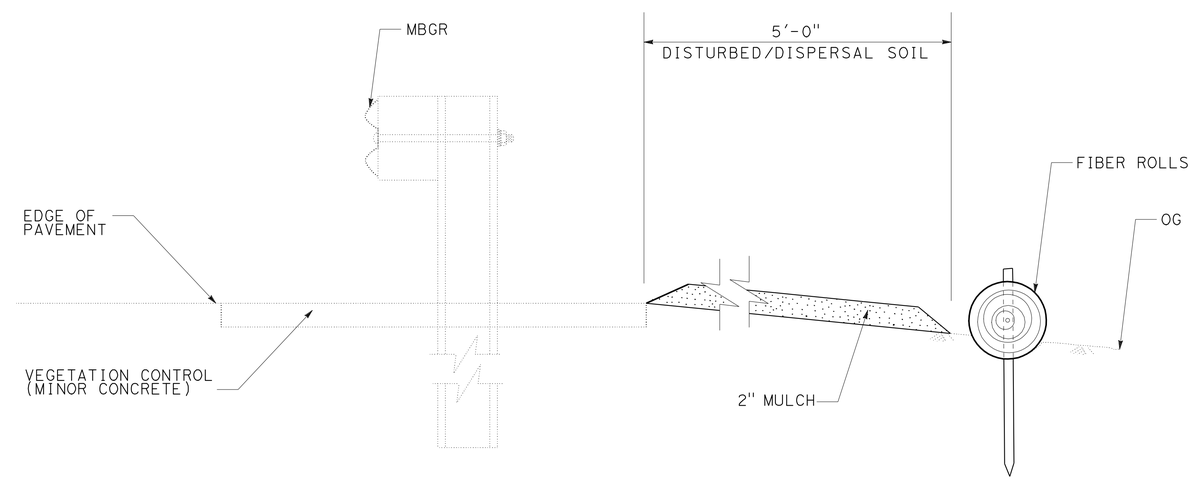

TYPICAL SECTION

APPROVED FOR EROSION CONTROL WORK ONLY

EROSION CONTROL PLAN

EC-1

STATE OF CALIFORNIA - DEPARTMENT OF TRANSPORTATION
Caltrans®
WATER QUALITY

SENIOR LANDSCAPE ARCHITECT: DAVID YAM

CALCULATED-DESIGNED BY: ANGELA KWAN
CHECKED BY: DAVID YAM

REVISED BY
DATE REVISED

LAST REVISION 04-09-12
DATE PLOTTED => 04-JUN-2012
TIME PLOTTED => 16:18

Dist	COUNTY	ROUTE	POST MILES TOTAL PROJECT	SHEET No.	TOTAL SHEETS
04	Ala,CC	4,80,84, 92,238,etc.	Var	42	141

LICENSED LANDSCAPE ARCHITECT

6-4-12
PLANS APPROVAL DATE

LICENSED LANDSCAPE ARCHITECT
DAVID WARREN YAM No. 3473
Signature
11-30-13
Renewal Date
04-09-12
Date
STATE OF CALIFORNIA

THE STATE OF CALIFORNIA OR ITS OFFICERS OR AGENTS SHALL NOT BE RESPONSIBLE FOR THE ACCURACY OR COMPLETENESS OF SCANNED COPIES OF THIS PLAN SHEET.

EROSION CONTROL QUANTITIES

PROJECT WORK LOCATIONS			POST MILE		MULCH	FIBER ROLLS
No.	COUNTY	ROUTE	PREFIX	PM	CY	LF
1	CC	4	R	4.936	2.7	73
2				8.409	3.4	90
3				8.449	4.2	110
4				11.666	2.7	73
5				13.637	6.6	176
6				13.706	2.7	73
7				15.604	3.4	90
8				17.181	2.7	73
9				17.183	5.4	146
10				19.877	4.3	113
11				19.950	5.4	146
12				20.294	5.4	146
13	Ala	80		3.642	2.7	73
14				4.671	3.6	95
15				4.761	2.7	73
16				5.704	5.4	142
17				5.974	2.7	73
18				7.107	3.7	98
19	CC	80		0.101	2.7	73
20				0.137	2.7	73
21				0.390	2.7	73
22				2.716	4.2	110
23				4.583	4.2	110
24				6.570	2.3	60
25				6.856	2.7	73
26				6.975	2.3	60
27				8.397	2.7	73
28				9.850	4.2	110
28A				10.040	5.4	146

PROJECT WORK LOCATIONS			POST MILE		MULCH	FIBER ROLLS
No.	COUNTY	ROUTE	PREFIX	PM	CY	LF
29	Ala	84	R	3.350	2.9	78
30				3.450	2.9	78
31				3.670	2.3	60
32				3.747	3.7	98
33				3.814, 3.965	2.3	62
34				10.633	5.8	155
35				10.633	5.4	146
36				10.713	5	133
37				10.713	5.4	146
38	Ala	92		4.470	1.3	35
39				4.470	10	265
40				5.001	4.2	110
41	Ala	238		2.192	4.6	123
41A			R	14.033	2.7	73
41B			R	14.470	3.2	85
42	CC	242	R	1.457	8.1	219
43				1.499	8.6	231
43A				1.665	5.4	146
44				2.046	3.7	98
45				2.274	2.7	73
46				2.625	2.7	73
47	Ala	260	R	1.924	2.7	73
48				0.983	2.7	73
49				1.051	2.7	73
50				1.924	4.6	120

EROSION CONTROL QUANTITIES

ECD-1

REVISED BY | DATE REVISED
ANGELA KWAN | DAVID YAM
CALCULATED-DESIGNED BY | CHECKED BY
SENIOR LANDSCAPE ARCHITECT
DAVID YAM
STATE OF CALIFORNIA - DEPARTMENT OF TRANSPORTATION
Caltrans®
WATER QUALITY

LAST REVISION 03-15-12
DATE PLOTTED => 04-JUN-2012
TIME PLOTTED => 16:18

Dist	COUNTY	ROUTE	POST MILES TOTAL PROJECT	SHEET No.	TOTAL SHEETS
04	Ala,CC	4,80,84, 92,238,etc.	Var	43	141

LICENSED LANDSCAPE ARCHITECT

6-4-12
PLANS APPROVAL DATE

LICENSED LANDSCAPE ARCHITECT
DAVID WARREN YAM No. 3003
Signature
11-30-13
Renewal date
04-09-12
Date
STATE OF CALIFORNIA

THE STATE OF CALIFORNIA OR ITS OFFICERS OR AGENTS SHALL NOT BE RESPONSIBLE FOR THE ACCURACY OR COMPLETENESS OF SCANNED COPIES OF THIS PLAN SHEET.

EROSION CONTROL QUANTITIES

PROJECT WORK LOCATIONS			POST MILE		MULCH	FIBER ROLLS
No.	COUNTY	ROUTE	PREFIX	PM	CY	LF
51	Ala	580	R	5.933	15	400
52				17.740	2.7	73
53				17.940	2.3	60
54				18.601	8.8	236
55				18.791	3.2	85
56				18.851	3.2	85
57				19.051	3.4	90
58				19.851	3.7	98
59				19.871	4.2	110
60				20.591	4.1	109
61			R	26.410	3.4	90
62				28.270	2.3	60
63				28.360	4.5	121
64				29.530	2.7	73
65			M	31.028	3.2	85
65A			M	31.029	3.2	85
66			R	31.961	3.4	90
67				32.591	3.7	98
68				32.971	3.4	90
70				36.251	2.7	73
71				37.621	2.3	60
72				37.931	2.7	73
73				39.061	5	133
74				38.281	2.5	65
75				40.971	5	134
76				41.731	15.4	408
77				42.031	5.9	155
78				42.901	7.2	193
79				43.761	3.4	90
80				44.307	3.4	91
81				44.308	7.3	196
82				44.433	8.5	226

PROJECT WORK LOCATIONS			POST MILE		MULCH	FIBER ROLLS
No.	COUNTY	ROUTE	PREFIX	PM	CY	LF
83	CC	580	R	0.086	2.7	73
84				0.116	5.4	146
85				1.000	5.4	146
86				2.930	2.7	73
87				3.400	2.7	73
88				4.504	3.2	85
89				5.128	3.7	98
90				5.504	3.7	98
91				5.847	5.6	151
92	Ala	680	R	8.312	2.3	60
93				15.251	5.4	144
94				18.396	2.6	69
95				19.041	9.6	256
96				19.261	6.4	170
97				19.351	5.9	158
98				19.300	3.2	85
99				19.511	2.7	73
100	CC	680	R	2.885	2.7	73
101				3.765	2.7	73
102				4.182	2.7	73
103				4.182	2.6	69
104				4.464	2.7	73
105				12.456	1.0	27
106				13.693	2.7	73
107				15.522	1.8	48
108				15.639	2.7	73

EROSION CONTROL QUANTITIES

ECD-2

STATE OF CALIFORNIA - DEPARTMENT OF TRANSPORTATION
Caltrans®
WATER QUALITY

SENIOR LANDSCAPE ARCHITECT: DAVID YAM
CALCULATED-DESIGNED BY: ANGELA KWAN
CHECKED BY: DAVID YAM
REVISED BY
DATE REVISED

LAST REVISION 03-15-12
DATE PLOTTED => 04-JUN-2012
TIME PLOTTED => 15:32

Dist	COUNTY	ROUTE	POST MILES TOTAL PROJECT	SHEET No.	TOTAL SHEETS
04	Ala,CC	4,80,84, 92,238,etc.	Var	44	141

LICENSED LANDSCAPE ARCHITECT

6-4-12
PLANS APPROVAL DATE

LICENSED LANDSCAPE ARCHITECT
DAVID WARREN YAM No. 3473
Signature
11-30-13
Renewal date
04-09-12
Date
STATE OF CALIFORNIA

THE STATE OF CALIFORNIA OR ITS OFFICERS OR AGENTS SHALL NOT BE RESPONSIBLE FOR THE ACCURACY OR COMPLETENESS OF SCANNED COPIES OF THIS PLAN SHEET.

EROSION CONTROL QUANTITIES

PROJECT WORK LOCATIONS			POST MILE		MULCH	FIBER ROLLS
No.	COUNTY	ROUTE	PREFIX	PM	CY	LF
109	CC	680	R	15.883	4.7	124
110				16.171	3.5	94
111				16.706	2.7	73
112				17.954	2.7	73
113				19.094	2.7	73
114				19.183	2.7	73
115				22.283	10	267
116				22.830	3.2	85
117	Ala	880		3.181	5.4	146
118				3.191	2.3	60
119				3.191	2.7	73
120				3.240	2.7	73
121				3.261	3.4	90
122				3.741	2.7	73
123				3.802	2.7	73
124				4.221	5.4	146
125				4.714	3.2	85
126				6.279 6.444	2.3	62
127				6.444	3.7	98
128				7.017	6.8	180
129				7.032	3.4	90
130				7.390	2.7	73
131				8.645	2.7	73
132				9.025	2.7	73
133				10.150	2.7	73
134				11.671	0.4	10
135				12.871	2.7	73
136				13.240	4	108
137				13.554	2.7	73
138				13.724	2.7	73
139				13.765	3.7	98
140				14.722	2.7	73
141				15.549	3.7	98

PROJECT WORK LOCATIONS			POST MILE		MULCH	FIBER ROLLS
No.	COUNTY	ROUTE	PREFIX	PM	CY	LF
142	Ala	880		15.748	3.7	98
144				17.724	2.7	73
145				18.228	2.7	73
146				18.482	2.7	73
148				20.686	2.7	73
149				20.818	2.3	60
150				20.820	2.7	73
151				20.821	2.7	73
152				20.902	2.7	73
153				20.902	2.7	73
154				21.556	4.2	110
155				22.837	3.7	98
156				22.720	2.7	73
157				22.946	2.7	73
158				23.709	2.7	73
159				24.731	3.7	98
160				24.910	2.7	73
161				25.522	2.7	73
162				26.481	6.8	182
163				26.482	6.8	182
164				26.581	3.7	98
165				26.701	9	240
166				29.101	5.4	146
167	Ala	980		0.562	8.8	236
168				1.029	3.4	90
				TOTAL	670	17,752

EROSION CONTROL QUANTITIES

ECD-3

STATE OF CALIFORNIA - DEPARTMENT OF TRANSPORTATION
Caltrans®
WATER QUALITY

SENIOR LANDSCAPE ARCHITECT: DAVID YAM

CALCULATED-DESIGNED BY: ANGELA KWAN
CHECKED BY: DAVID YAM

REVISED BY
DATE REVISED

LAST REVISION 03-15-12
DATE PLOTTED => 04-JUN-2012
TIME PLOTTED => 15:32

Dist	COUNTY	ROUTE	POST MILES TOTAL PROJECT	SHEET No.	TOTAL SHEETS
04	Ala,CC	4,80,84, 92,238,etc.	Var	45	141

REGISTERED CIVIL ENGINEER 4-11-12 DATE

6-4-12
PLANS APPROVAL DATE

REGISTERED PROFESSIONAL ENGINEER Florante P. Perez No. 41030 Exp. 3-31-13 CIVIL STATE OF CALIFORNIA

THE STATE OF CALIFORNIA OR ITS OFFICERS OR AGENTS SHALL NOT BE RESPONSIBLE FOR THE ACCURACY OR COMPLETENESS OF SCANNED COPIES OF THIS PLAN SHEET.

TYPICAL SIGN INSTALLATION

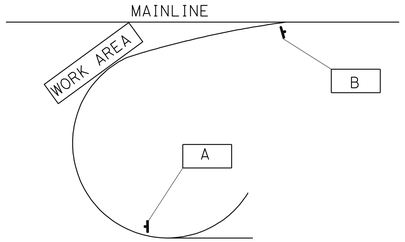

FOR LOCATION:

1 31 42 43 53 55 56 58 59 65 81
89 90 93 97 113 120 121 135 150 158 161

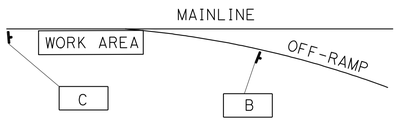

FOR LOCATIONS:

1 54 112 167

FOR LOCATION:

15 148 153

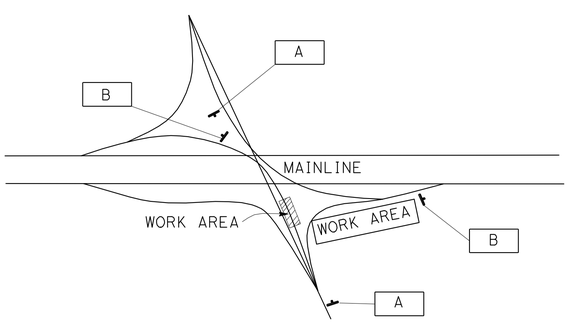

FOR LOCATION:

28 28A

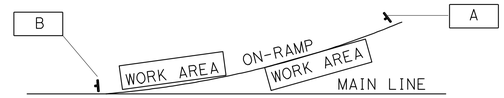

FOR LOCATION:

2 6 9 11 18 20 22 27 28 33
38 40 44 61 63 64 65A 72 74 76 166

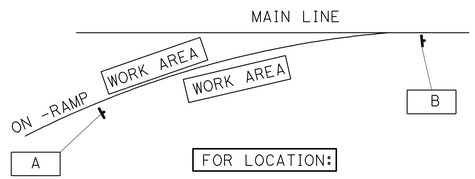

FOR LOCATION:

7 8 12 23 26 43A 45 138 129 53
62 67 70 71 80 84 86 88 157 137
91 96 106 116 123 159 163 164

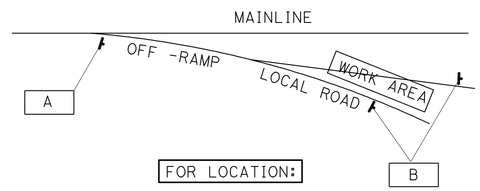

FOR LOCATION:

16 111 152

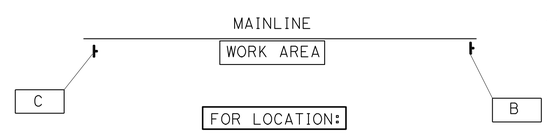

FOR LOCATION:

29 30

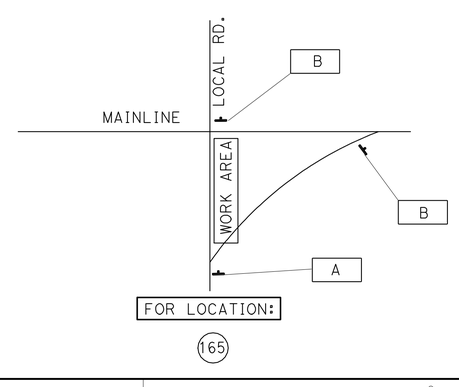

FOR LOCATION:

165

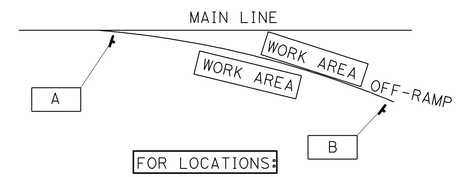

FOR LOCATIONS:

3 4 10 13 19 22 24 46 52 66 68 78
79 82 83 84 95 99 107 108 109 110 114 115
117 118 119 127 130 132 133 136 138 140 145 146
156 160 162

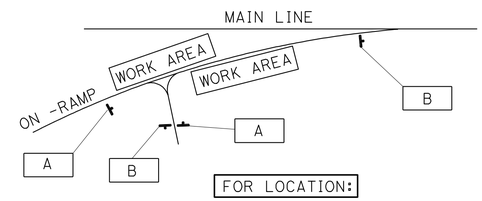

FOR LOCATION:

14

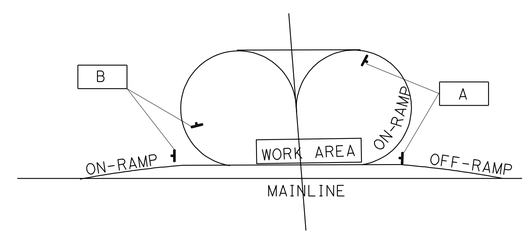

FOR LOCATION:

17 60 141 142 151

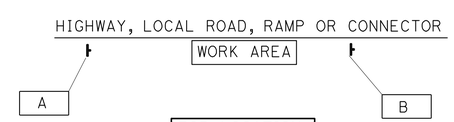

FOR LOCATION:

32 34 35 36 37 39 41 41A 41B 47 48
49 50 51 73 92 94 98 100 101 102 103
104 105 125 147 154 155

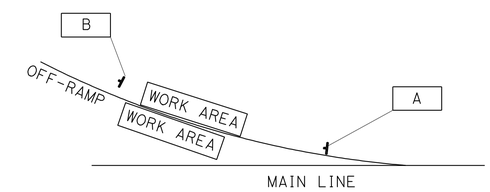

FOR LOCATION:

21 25 85 87 128 168

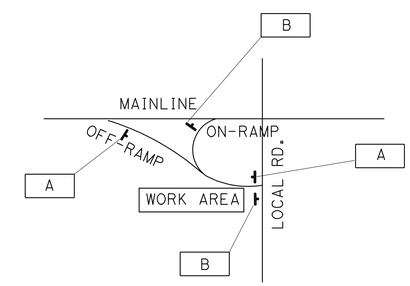

FOR LOCATION:

126 134

LEGEND:

L	CONSTRUCTION AREA SIGN LETTER
No.	LOCATION OF CONSTRUCTION

NOTES:

1. EXACT LOCATION AND POSITION OF CONSTRUCTION AREA SIGNS TO BE DETERMINED BY THE ENGINEER.
2. ALL CONSTRUCTION AREA SIGNS SHALL BE STATIONARY MOUNTED, UNLESS OTHERWISE INDICATED.

CONSTRUCTION AREA SIGNS

NO SCALE

CS-1

STATE OF CALIFORNIA - DEPARTMENT OF TRANSPORTATION
Caltrans®
TRAFFIC

FUNCTIONAL SUPERVISOR: LOURDES DAVID
CALCULATED-DESIGNED BY: FLORANTE P. PEREZ
CHECKED BY: LEOPOLDO G. BONGATO
REVISED BY
DATE REVISED

LAST REVISION 04-13-12 | DATE PLOTTED => 05-JUN-2012 | TIME PLOTTED => 08:25

Dist	COUNTY	ROUTE	POST MILES TOTAL PROJECT	SHEET No.	TOTAL SHEETS
04	Ala,CC	4,80,84, 92,238,etc.	Var	46	141

Florante P. Perez 4-11-12
REGISTERED CIVIL ENGINEER DATE

6-4-12
PLANS APPROVAL DATE

REGISTERED PROFESSIONAL ENGINEER Florante P. Perez No. 41030 Exp. 3-31-13 CIVIL STATE OF CALIFORNIA

THE STATE OF CALIFORNIA OR ITS OFFICERS OR AGENTS SHALL NOT BE RESPONSIBLE FOR THE ACCURACY OR COMPLETENESS OF SCANNED COPIES OF THIS PLAN SHEET.

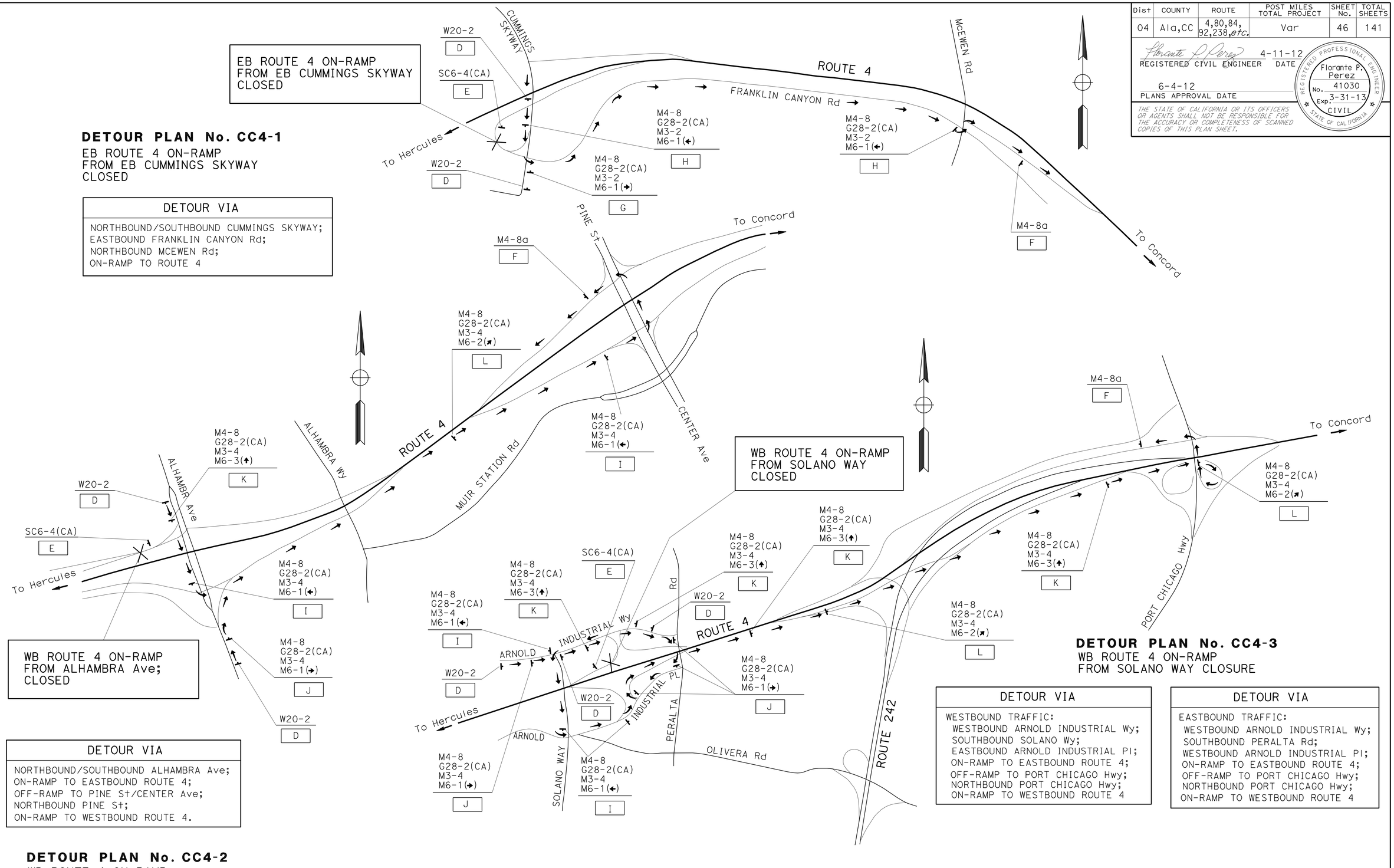

DETOUR PLAN No. CC4-1
EB ROUTE 4 ON-RAMP
FROM EB CUMMINGS SKYWAY
CLOSED

DETOUR VIA
NORTHBOUND/SOUTHBOUND CUMMINGS SKYWAY; EASTBOUND FRANKLIN CANYON Rd; NORTHBOUND MCEWEN Rd; ON-RAMP TO ROUTE 4

WB ROUTE 4 ON-RAMP
FROM ALHAMBRA Ave;
CLOSED

DETOUR VIA
NORTHBOUND/SOUTHBOUND ALHAMBRA Ave; ON-RAMP TO EASTBOUND ROUTE 4; OFF-RAMP TO PINE St/CENTER Ave; NORTHBOUND PINE St; ON-RAMP TO WESTBOUND ROUTE 4.

DETOUR PLAN No. CC4-2
WB ROUTE 4 ON-RAMP
FROM ALHAMBRA Ave;
CLOSURE

DETOUR PLAN No. CC4-3
WB ROUTE 4 ON-RAMP
FROM SOLANO WAY CLOSURE

DETOUR VIA
WESTBOUND TRAFFIC: WESTBOUND ARNOLD INDUSTRIAL Wy; SOUTHBOUND SOLANO Wy; EASTBOUND ARNOLD INDUSTRIAL Pl; ON-RAMP TO EASTBOUND ROUTE 4; OFF-RAMP TO PORT CHICAGO Hwy; NORTHBOUND PORT CHICAGO Hwy; ON-RAMP TO WESTBOUND ROUTE 4

DETOUR VIA
EASTBOUND TRAFFIC: WESTBOUND ARNOLD INDUSTRIAL Wy; SOUTHBOUND PERALTA Rd; WESTBOUND ARNOLD INDUSTRIAL Pl; ON-RAMP TO EASTBOUND ROUTE 4; OFF-RAMP TO PORT CHICAGO Hwy; NORTHBOUND PORT CHICAGO Hwy; ON-RAMP TO WESTBOUND ROUTE 4

CONSTRUCTION AREA SIGNS
NO SCALE

CS-2

STATE OF CALIFORNIA - DEPARTMENT OF TRANSPORTATION
Caltrans® TRAFFIC

FUNCTIONAL SUPERVISOR: LOURDES DAVID
CALCULATED-DESIGNED BY: LEOPOLDO G. BONGATO
CHECKED BY: FLORANTE P. PEREZ
REVISED BY / DATE REVISED

LAST REVISION 04-13-12
DATE PLOTTED => 04-JUN-2012
TIME PLOTTED => 16:46

Dist	COUNTY	ROUTE	POST MILES TOTAL PROJECT	SHEET No.	TOTAL SHEETS
04	Ala,CC	4,80,84, 92,238,etc.	Var	47	141

REGISTERED CIVIL ENGINEER 4-11-12 DATE

6-4-12
PLANS APPROVAL DATE

REGISTERED PROFESSIONAL ENGINEER Florante P. Perez No. 41030 Exp. 3-31-13 CIVIL STATE OF CALIFORNIA

THE STATE OF CALIFORNIA OR ITS OFFICERS OR AGENTS SHALL NOT BE RESPONSIBLE FOR THE ACCURACY OR COMPLETENESS OF SCANNED COPIES OF THIS PLAN SHEET.

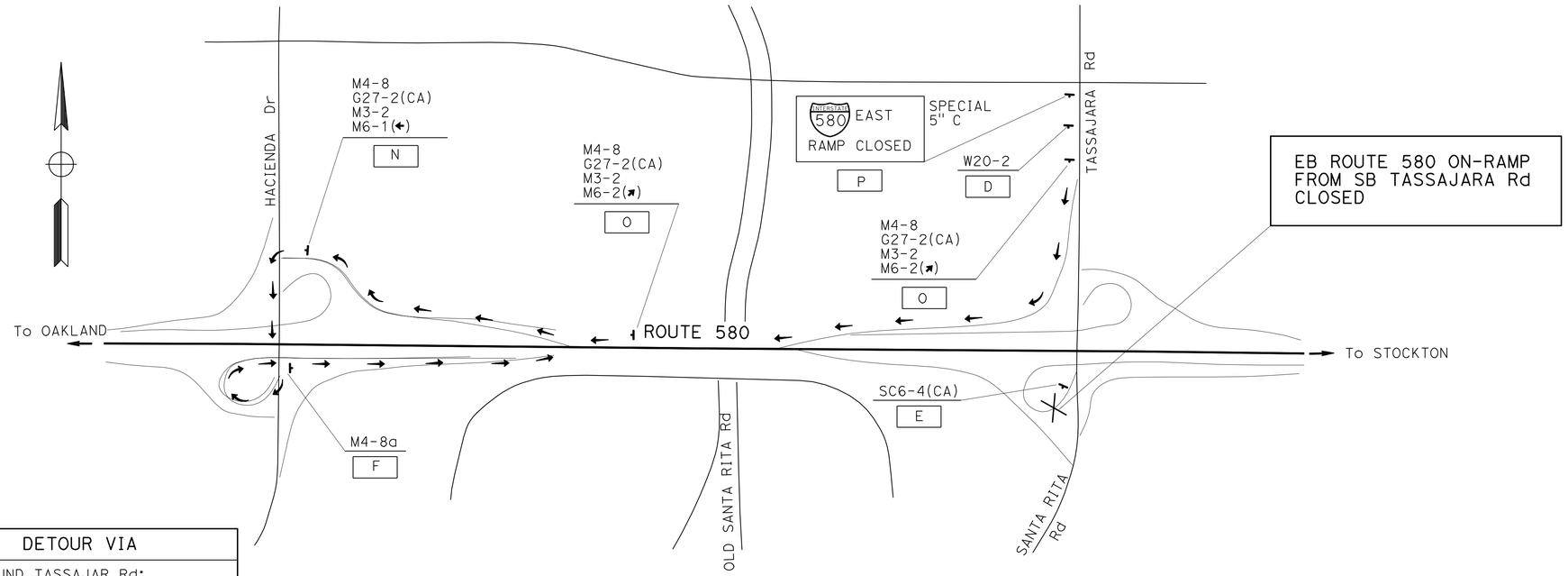

DETOUR VIA
SOUTHBOUND TASSAJAR Rd; ON-RAMP TO WESTBOUND ROUTE 580; OFF-RAMP TO HACIENDA Dr; SOUTHBOUND HACIENDA Dr; ON-RAMP TO EASTBOUND ROUTE 580.

DETOUR PLAN No. Ala 580-01
EB ROUTE 580 ON-RAMP
FROM SB TASSAJARA Rd
CLOSURE

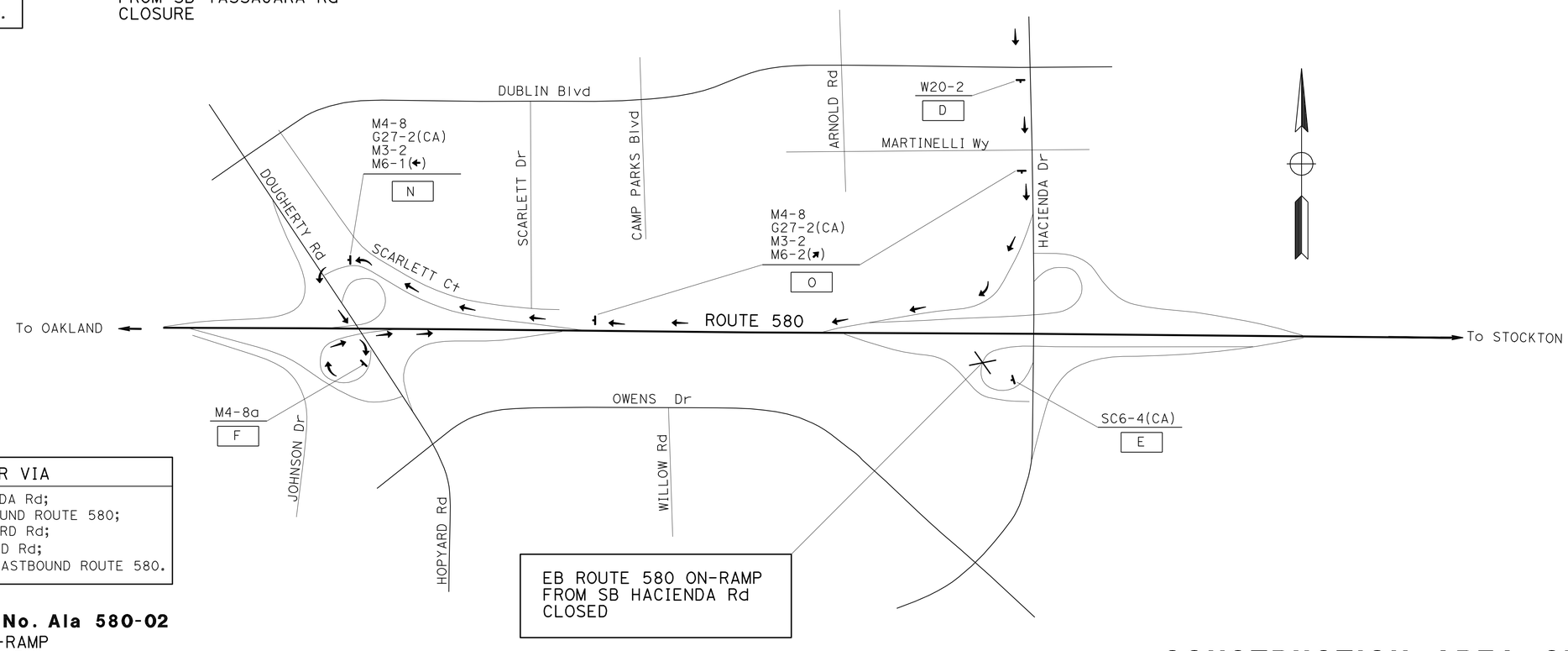

DETOUR VIA
SOUTHBOUND HACIENDA Rd; ON-RAMP TO WESTBOUND ROUTE 580; OFF-RAMP TO HOPYARD Rd; SOUTHBOUND HOPYARD Rd; LOOP ON-RAMP TO EASTBOUND ROUTE 580.

DETOUR PLAN No. Ala 580-02
EB ROUTE 580 ON-RAMP
FROM SB HACIENDA Rd
CLOSURE

CONSTRUCTION AREA SIGNS

NO SCALE

CS-3

REVISED BY | DATE REVISED
LEOPOLDO G. BONGATO | FLORANTE P. PEREZ
CALCULATED-DESIGNED BY | CHECKED BY
FUNCTIONAL SUPERVISOR
LOURDES DAVID

STATE OF CALIFORNIA - DEPARTMENT OF TRANSPORTATION
Caltrans®
TRAFFIC

LAST REVISION 05-16-12 | DATE PLOTTED => 04-JUN-2012 TIME PLOTTED => 16:46

Dist	COUNTY	ROUTE	POST MILES TOTAL PROJECT	SHEET No.	TOTAL SHEETS
04	Ala,CC	4,80,84, 92,238,etc.	Var	48	141

REGISTERED CIVIL ENGINEER 4-11-12 DATE

6-4-12
PLANS APPROVAL DATE

REGISTERED PROFESSIONAL ENGINEER Florante P. Perez No. 41030 Exp. 3-31-13 CIVIL STATE OF CALIFORNIA

THE STATE OF CALIFORNIA OR ITS OFFICERS OR AGENTS SHALL NOT BE RESPONSIBLE FOR THE ACCURACY OR COMPLETENESS OF SCANNED COPIES OF THIS PLAN SHEET.

EB ROUTE 580 ON-RAMP
FROM NB CROW CANYON Rd/GROVE WAY
CLOSURE

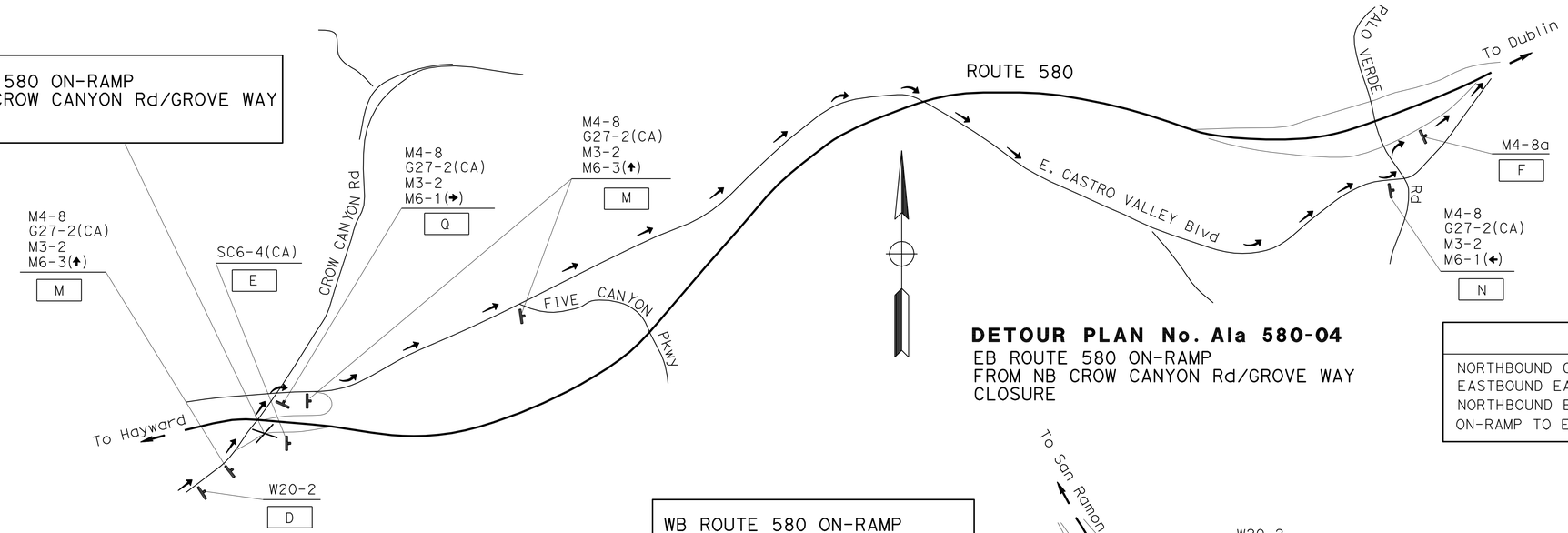

DETOUR PLAN No. Ala 580-04
EB ROUTE 580 ON-RAMP
FROM NB CROW CANYON Rd/GROVE WAY
CLOSURE

DETOUR VIA
NORTHBOUND GROVE WAY/CROW CANYON Rd;
EASTBOUND EAST CASTRO VALLEY Blvd;
NORTHBOUND EDEN CANYON Rd;
ON-RAMP TO EASTBOUND ROUTE 580.

WB ROUTE 580 ON-RAMP
TO SB ROUTE 680 CONNECTOR
CLOSED

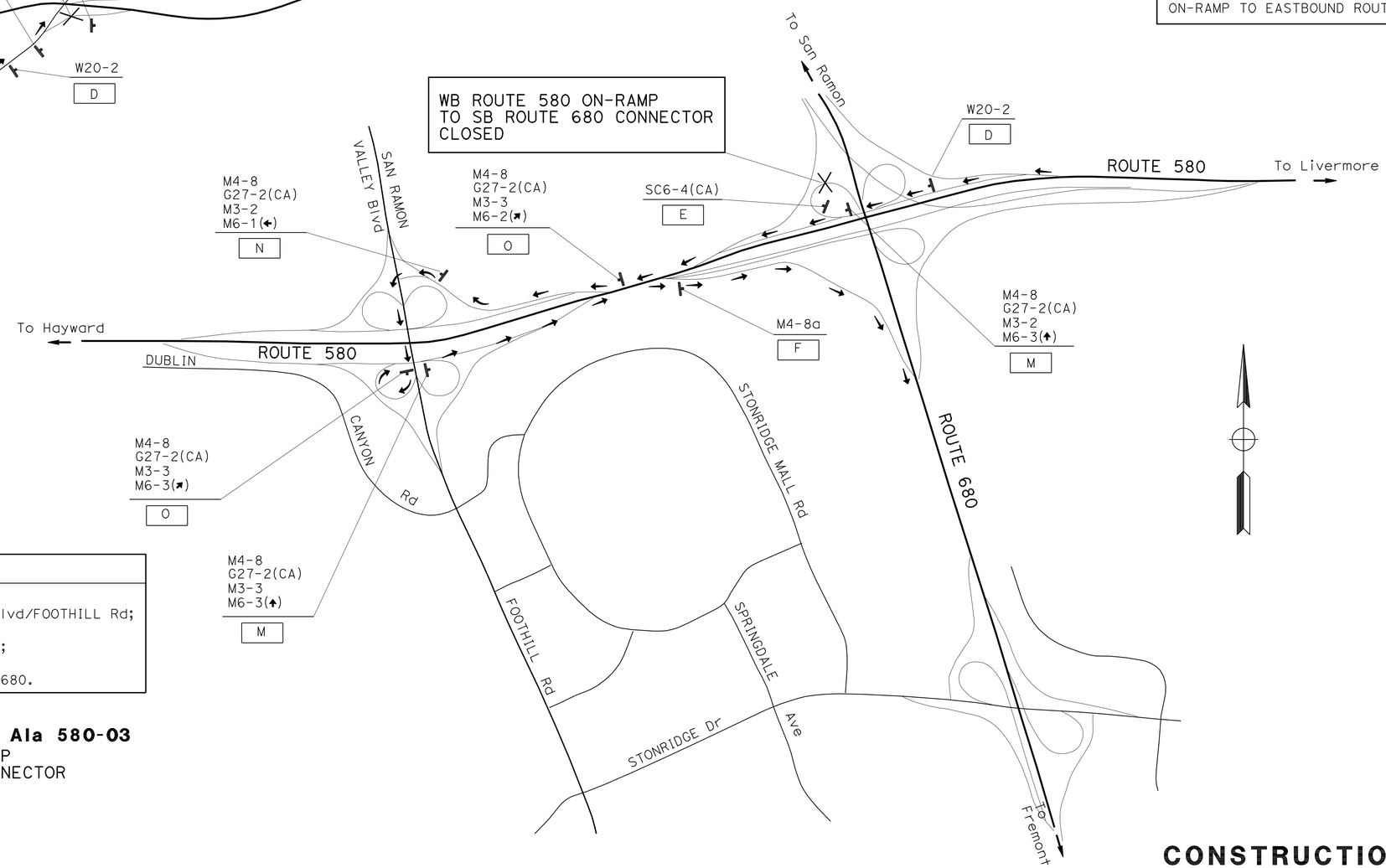

DETOUR VIA
WESTBOUND ROUTE 580;
OFF-RAMP TO SAN RAMON VALLEY Blvd/FOOTHILL Rd;
SOUTHBOUND FOOTHILL Rd;
ON-RAMP TO EASTBOUND ROUTE 580;
EASTBOUND ROUTE 580;
CONNECTOR TO SOUTHBOUND ROUTE 680.

DETOUR PLAN No. Ala 580-03
WB ROUTE 580 ON-RAMP
TO SB ROUTE 680 CONNECTOR
CLOSURE

FOR NOTES, ABBREVIATIONS AND LEGEND, SEE SHEET CS-1

THIS PLAN ACCURATE FOR CONSTRUCTION AREA SIGN WORK ONLY

CONSTRUCTION AREA SIGNS
NO SCALE

CS-4

STATE OF CALIFORNIA - DEPARTMENT OF TRANSPORTATION
Caltrans® TRAFFIC

FUNCTIONAL SUPERVISOR: LOURDES DAVID
CALCULATED-DESIGNED BY: LEOPOLDO G. BONGATO
CHECKED BY: FLORANTE P. PEREZ
REVISED BY
DATE REVISED

LAST REVISION 04-13-12
DATE PLOTTED => 04-JUN-2012
TIME PLOTTED => 16:46

Dist	COUNTY	ROUTE	POST MILES TOTAL PROJECT	SHEET No.	TOTAL SHEETS
04	Ala,CC	4,80,84, 92,238,etc.	Var	49	141

Florante P. Perez 4-11-12
REGISTERED CIVIL ENGINEER DATE

6-4-12
PLANS APPROVAL DATE

REGISTERED PROFESSIONAL ENGINEER Florante P. Perez No. 41030 Exp. 3-31-13 CIVIL STATE OF CALIFORNIA

THE STATE OF CALIFORNIA OR ITS OFFICERS OR AGENTS SHALL NOT BE RESPONSIBLE FOR THE ACCURACY OR COMPLETENESS OF SCANNED COPIES OF THIS PLAN SHEET.

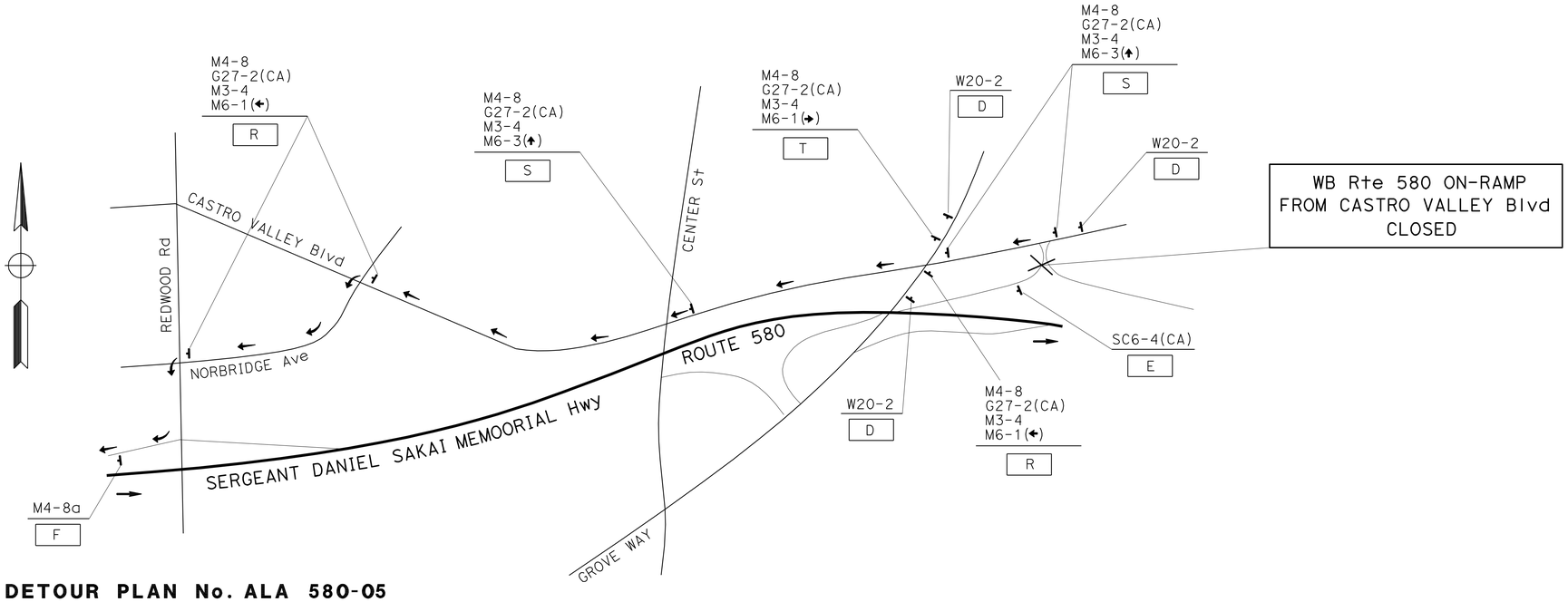

DETOUR PLAN No. ALA 580-05

WB Rte 580 ON-RAMP FROM
CASTRO VALLEY Blvd CLOSURE

DETOUR VIA
WESTBOUND CASTRO VALLEY Blvd SOUTHBOUND NORBRIDGE Ave; SOUTHBOUND REDWOOD Rd; ON-RAMP TO WESTBOUND ROUTE 580.

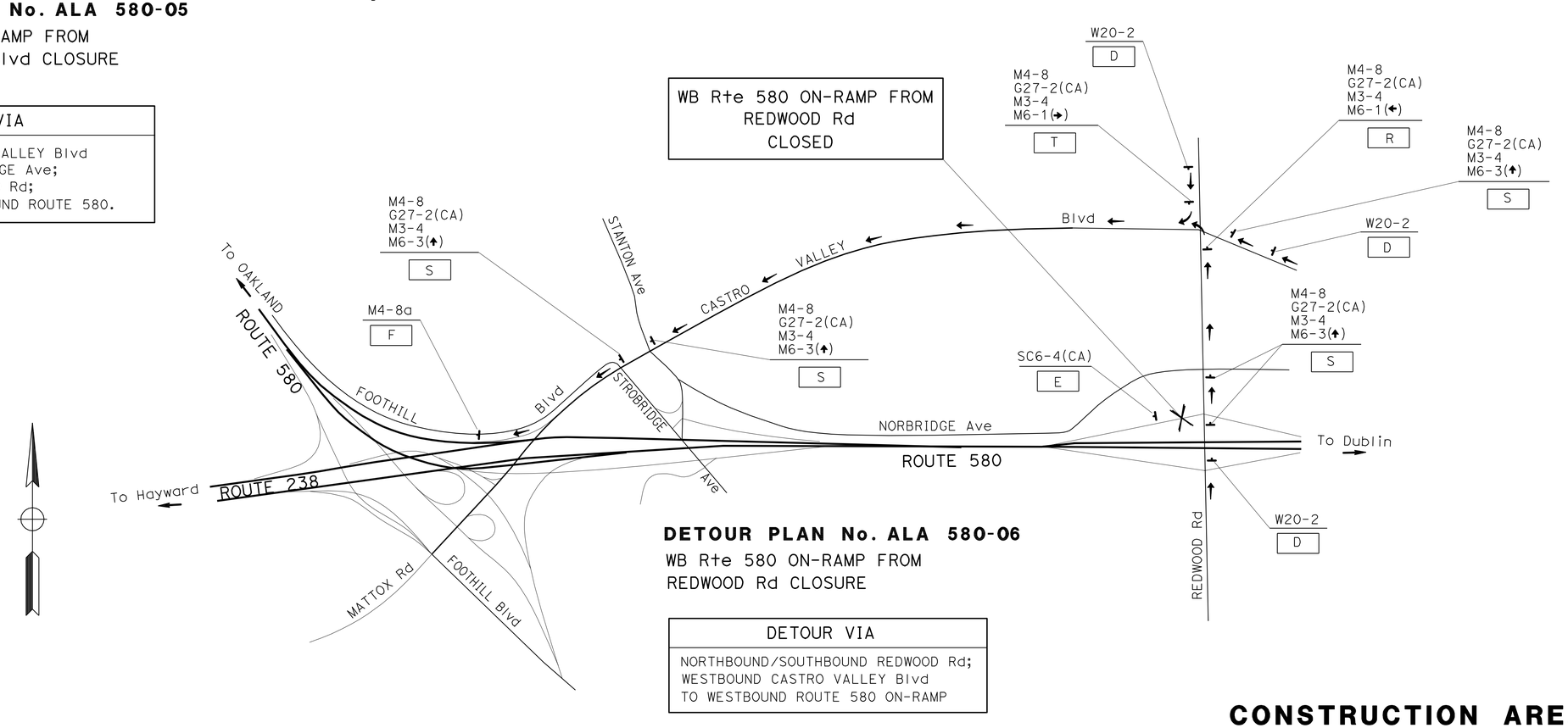

DETOUR PLAN No. ALA 580-06

WB Rte 580 ON-RAMP FROM
REDWOOD Rd CLOSURE

DETOUR VIA
NORTHBOUND/SOUTHBOUND REDWOOD Rd; WESTBOUND CASTRO VALLEY Blvd TO WESTBOUND ROUTE 580 ON-RAMP

CONSTRUCTION AREA SIGNS

NO SCALE

CS-5

STATE OF CALIFORNIA - DEPARTMENT OF TRANSPORTATION
Caltrans
TRAFFIC

FUNCTIONAL SUPERVISOR: LOURDES DAVID
CALCULATED-DESIGNED BY: LEOPOLDO G. BONGATO
CHECKED BY: FLORANTE P. PEREZ
REVISED BY
DATE REVISED

LAST REVISION 04-13-12 | DATE PLOTTED => 04-JUN-2012 | TIME PLOTTED => 16:46

Dist	COUNTY	ROUTE	POST MILES TOTAL PROJECT	SHEET No.	TOTAL SHEETS
04	Ala,CC	4,80,84, 92,238,*etc.*	Var	50	141

REGISTERED CIVIL ENGINEER 4-11-12 DATE

6-4-12
PLANS APPROVAL DATE

REGISTERED PROFESSIONAL ENGINEER Florante P. Perez No. 41030 Exp. 3-31-13 CIVIL STATE OF CALIFORNIA

THE STATE OF CALIFORNIA OR ITS OFFICERS OR AGENTS SHALL NOT BE RESPONSIBLE FOR THE ACCURACY OR COMPLETENESS OF SCANNED COPIES OF THIS PLAN SHEET.

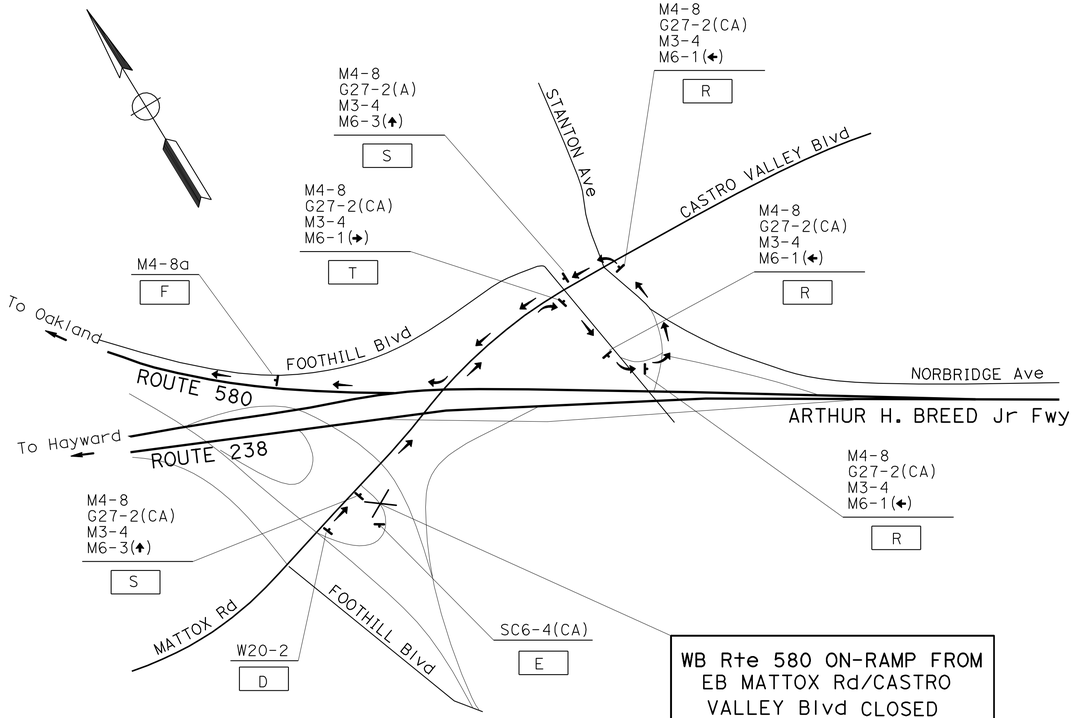

WB Rte 580 ON-RAMP FROM EB MATTOX Rd/CASTRO VALLEY Blvd CLOSED

DETOUR VIA
EASTBOUND MATTOX RD/CASTRO VALLEY Blvd; SOUTHBOUND STONEBRIDGE Ave; NORTHBOUND STANTON Ave; WESTBOUND CASTRO VALLEY Blvd; ON-RAMP TO WESTBOUND ROUTE 580

DETOUR PLAN No. ALA 580-07

WB Rte 580 ON-RAMP FROM EB MATTOX Rd/CASTRO VALLEY Blvd CLOSURE

EB Rte 580 ON-RAMP FROM FAIRMONT Dr & FREEDOM Ave AND PLAZA Dr CLOSED

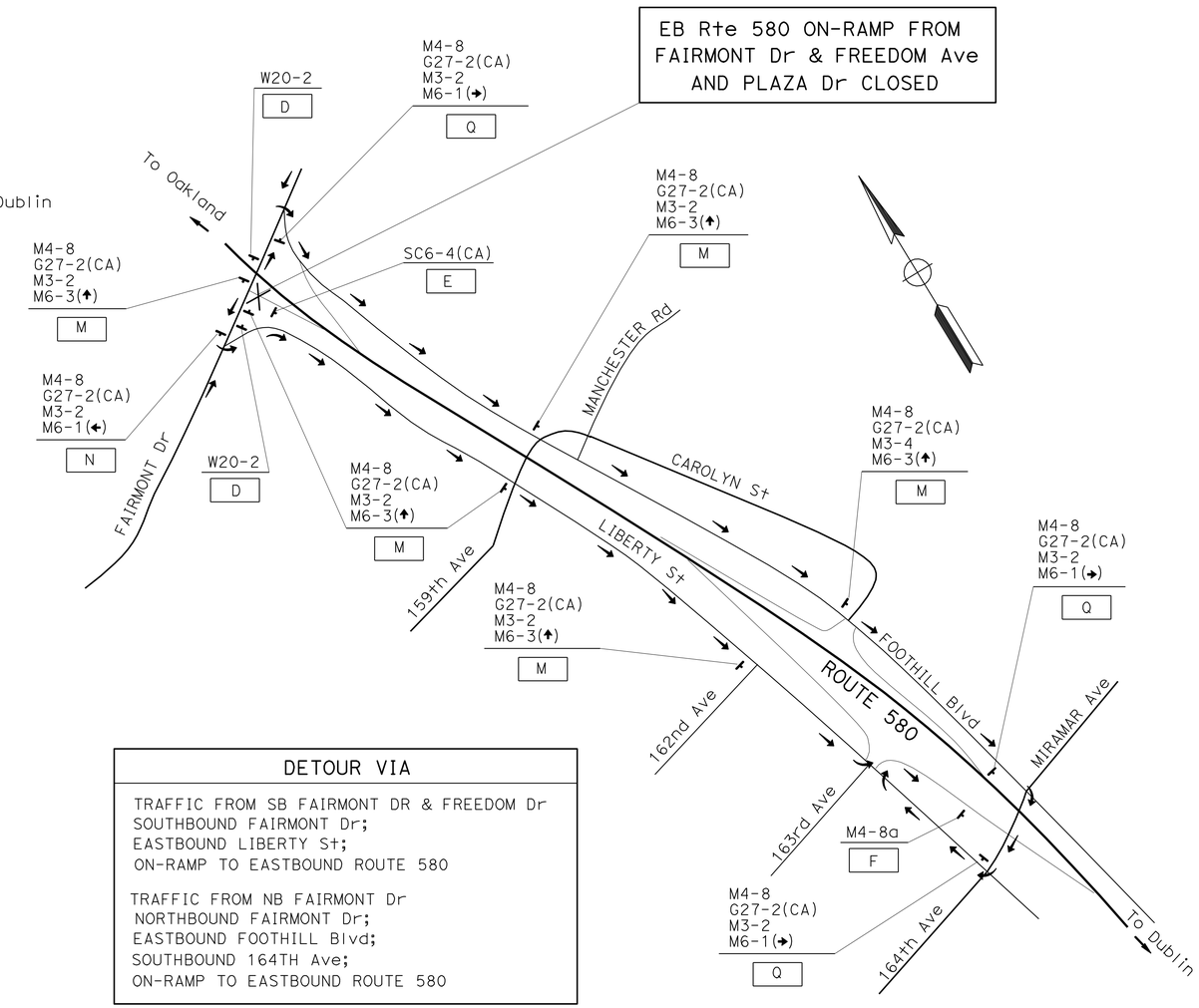

DETOUR VIA
TRAFFIC FROM SB FAIRMONT DR & FREEDOM Dr SOUTHBOUND FAIRMONT Dr; EASTBOUND LIBERTY St; ON-RAMP TO EASTBOUND ROUTE 580 TRAFFIC FROM NB FAIRMONT Dr NORTHBOUND FAIRMONT Dr; EASTBOUND FOOTHILL Blvd; SOUTHBOUND 164TH Ave; ON-RAMP TO EASTBOUND ROUTE 580

DETOUR PLAN No. ALA 580-08

FAIRMONT Dr & FREEDOM Ave/PLAZA Dr CLOSURE

CONSTRUCTION AREA SIGNS

NO SCALE

CS-6

STATE OF CALIFORNIA - DEPARTMENT OF TRANSPORTATION
Caltrans® TRAFFIC

FUNCTIONAL SUPERVISOR: LOURDES DAVID
CALCULATED-DESIGNED BY: LEOPOLDO G. BONGATO
CHECKED BY: FLORANTE P. PEREZ
REVISED BY / DATE REVISED

LAST REVISION 04-13-12 | DATE PLOTTED => 04-JUN-2012 | TIME PLOTTED => 16:46

Dist	COUNTY	ROUTE	POST MILES TOTAL PROJECT	SHEET No.	TOTAL SHEETS
04	Ala,CC	4,80,84, 92,238,etc.	Var	51	141

REGISTERED CIVIL ENGINEER 4-11-12 DATE

6-4-12
PLANS APPROVAL DATE

REGISTERED PROFESSIONAL ENGINEER Florante P. Perez No. 41030 Exp. 3-31-13 CIVIL STATE OF CALIFORNIA

THE STATE OF CALIFORNIA OR ITS OFFICERS OR AGENTS SHALL NOT BE RESPONSIBLE FOR THE ACCURACY OR COMPLETENESS OF SCANNED COPIES OF THIS PLAN SHEET.

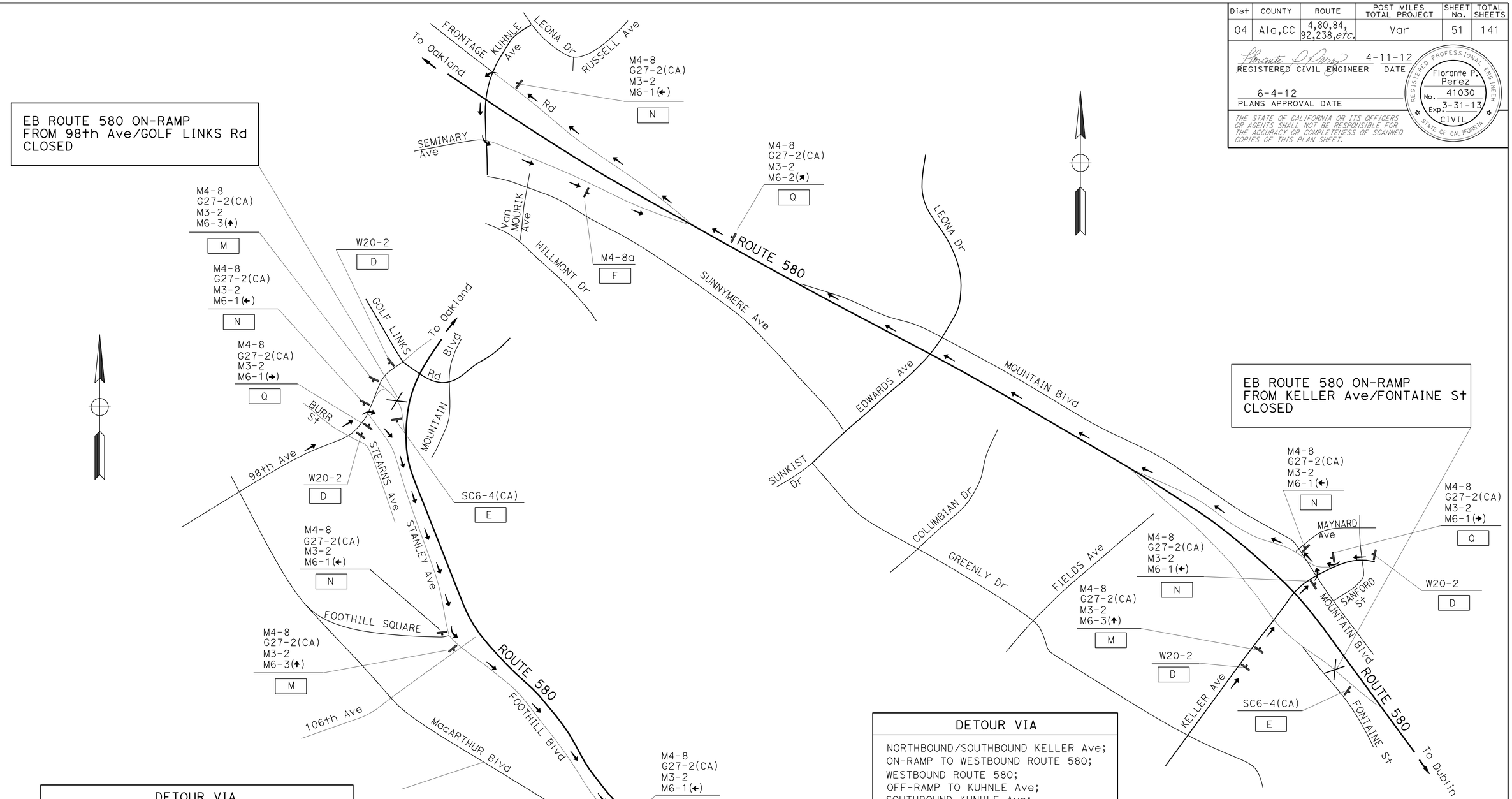

DETOUR VIA

NORTHBOUND 98TH Ave/SOUTHBOUND GOLF LINKS Rd;
EASTBOUND STANLEY Ave;
EASTBOUND FOOTHILL Ave;
ON-RAMP TO EASTBOUND ROUTE 580.

DETOUR PLAN No. Ala 580-09
EB ROUTE 580 ON-RAMP
FROM 98th Ave/GOLF LINKS Rd
CLOSURE

DETOUR VIA

NORTHBOUND/SOUTHBOUND KELLER Ave;
ON-RAMP TO WESTBOUND ROUTE 580;
WESTBOUND ROUTE 580;
OFF-RAMP TO KUHNLE Ave;
SOUTHBOUND KUNHLE Ave;
ON-RAMP TO EASTBOUND ROUTE 580;

DETOUR PLAN No. Ala 580-10
EB ROUTE 580 ON-RAMP
FROM KELLER Ave/FONTAINE St
CLOSURE

FOR NOTES, ABBREVIATIONS AND LEGEND, SEE SHEET CS-1

THIS PLAN ACCURATE FOR CONSTRUCTION AREA SIGN WORK ONLY

CONSTRUCTION AREA SIGNS

NO SCALE

CS-7

STATE OF CALIFORNIA - DEPARTMENT OF TRANSPORTATION
Caltrans
TRAFFIC

FUNCTIONAL SUPERVISOR: LOURDES DAVID
CALCULATED-DESIGNED BY: LEOPOLDO G. BONGATO
CHECKED BY: FLORANTE P. PEREZ
REVISED BY
DATE REVISED

LAST REVISION 04-13-12
DATE PLOTTED => 04-JUN-2012
TIME PLOTTED => 16:47

Dist	COUNTY	ROUTE	POST MILES TOTAL PROJECT	SHEET No.	TOTAL SHEETS
04	Ala,CC	4,80,84, 92,238,etc.	Var	52	141

Florante P. Perez 4-11-12
REGISTERED CIVIL ENGINEER DATE

6-4-12
PLANS APPROVAL DATE

REGISTERED PROFESSIONAL ENGINEER
Florante P. Perez
No. 41030
Exp. 3-31-13
CIVIL
STATE OF CALIFORNIA

THE STATE OF CALIFORNIA OR ITS OFFICERS OR AGENTS SHALL NOT BE RESPONSIBLE FOR THE ACCURACY OR COMPLETENESS OF SCANNED COPIES OF THIS PLAN SHEET.

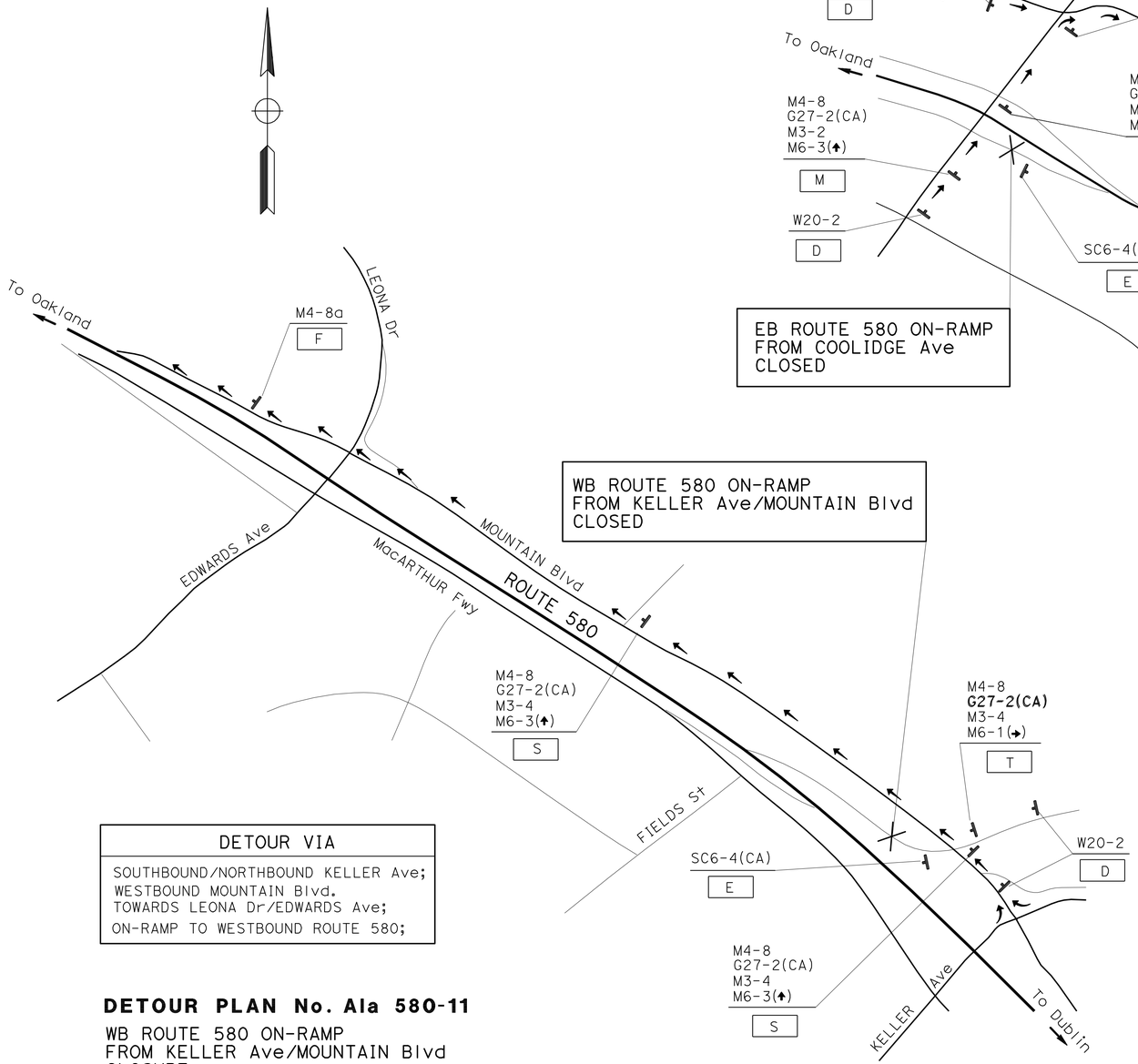

WB ROUTE 580 ON-RAMP
FROM KELLER Ave/MOUNTAIN Blvd
CLOSED

DETOUR VIA
SOUTHBOUND/NORTHBOUND KELLER Ave; WESTBOUND MOUNTAIN Blvd. TOWARDS LEONA Dr/EDWARDS Ave; ON-RAMP TO WESTBOUND ROUTE 580;

DETOUR PLAN No. Ala 580-11

WB ROUTE 580 ON-RAMP
FROM KELLER Ave/MOUNTAIN Blvd
CLOSURE

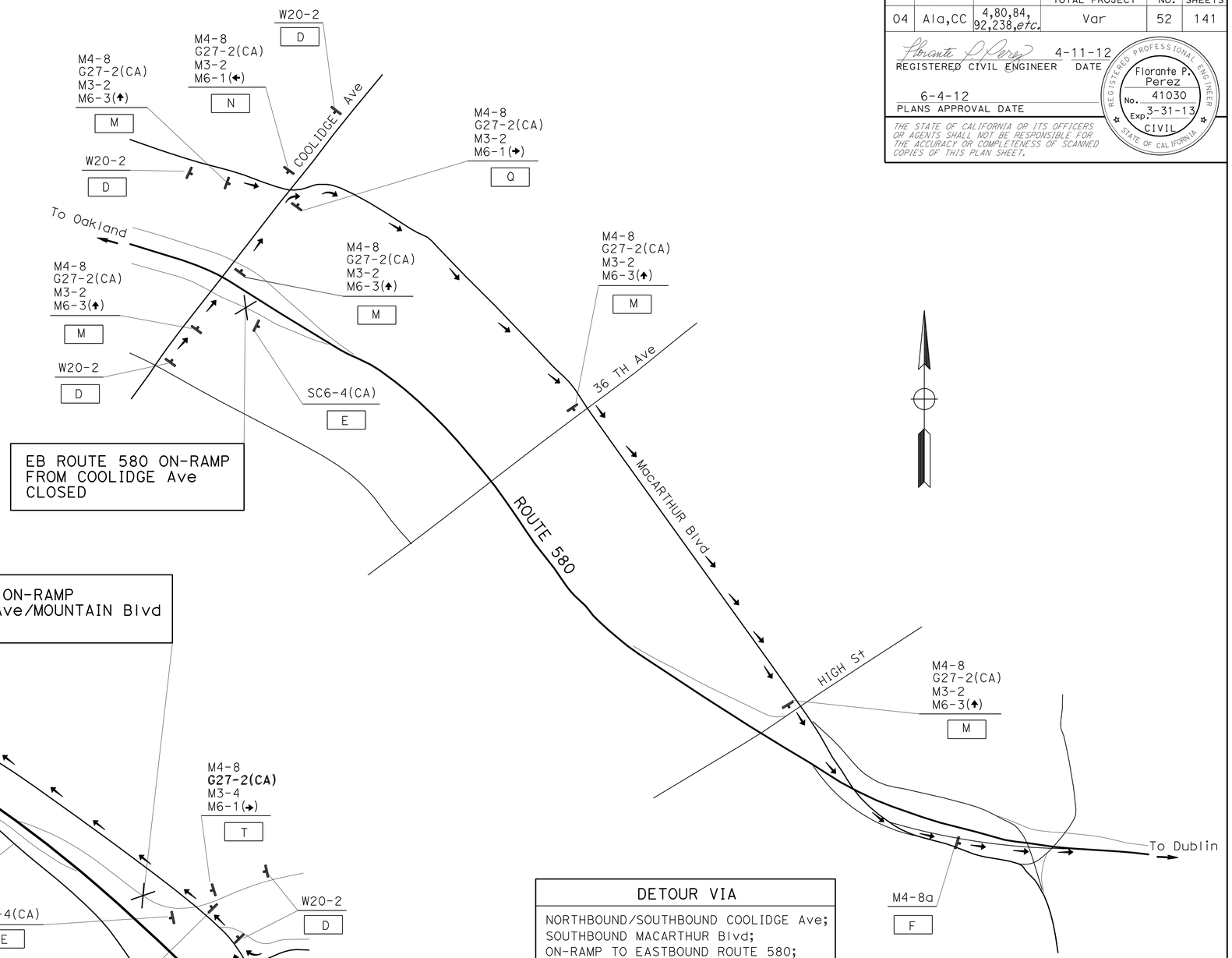

EB ROUTE 580 ON-RAMP
FROM COOLIDGE Ave
CLOSED

DETOUR VIA
NORTHBOUND/SOUTHBOUND COOLIDGE Ave; SOUTHBOUND MACARTHUR Blvd; ON-RAMP TO EASTBOUND ROUTE 580;

DETOUR PLAN No. Ala 580-12

EB ROUTE 580 ON-RAMP
FROM COOLIDGE Ave
CLOSED

FOR NOTES, ABBREVIATIONS AND LEGEND, SEE SHEET CS-1

THIS PLAN ACCURATE FOR CONSTRUCTION AREA SIGN WORK ONLY

CONSTRUCTION AREA SIGNS

NO SCALE

CS-8

STATE OF CALIFORNIA - DEPARTMENT OF TRANSPORTATION
Caltrans
TRAFFIC

FUNCTIONAL SUPERVISOR: LOURDES DAVID
CALCULATED-DESIGNED BY: LEOPOLDO G. BONGATO
CHECKED BY: FLORANTE P. PEREZ
REVISED BY
DATE REVISED

LAST REVISION 04-13-12
DATE PLOTTED => 04-JUN-2012
TIME PLOTTED => 16:47

Dist	COUNTY	ROUTE	POST MILES TOTAL PROJECT	SHEET No.	TOTAL SHEETS
04	Ala,CC	4,80,84, 92,238,etc.	Var	53	141

REGISTERED CIVIL ENGINEER 4-11-12 DATE

6-4-12
PLANS APPROVAL DATE

REGISTERED PROFESSIONAL ENGINEER Florante P. Perez No. 41030 Exp. 3-31-13 CIVIL STATE OF CALIFORNIA

THE STATE OF CALIFORNIA OR ITS OFFICERS OR AGENTS SHALL NOT BE RESPONSIBLE FOR THE ACCURACY OR COMPLETENESS OF SCANNED COPIES OF THIS PLAN SHEET.

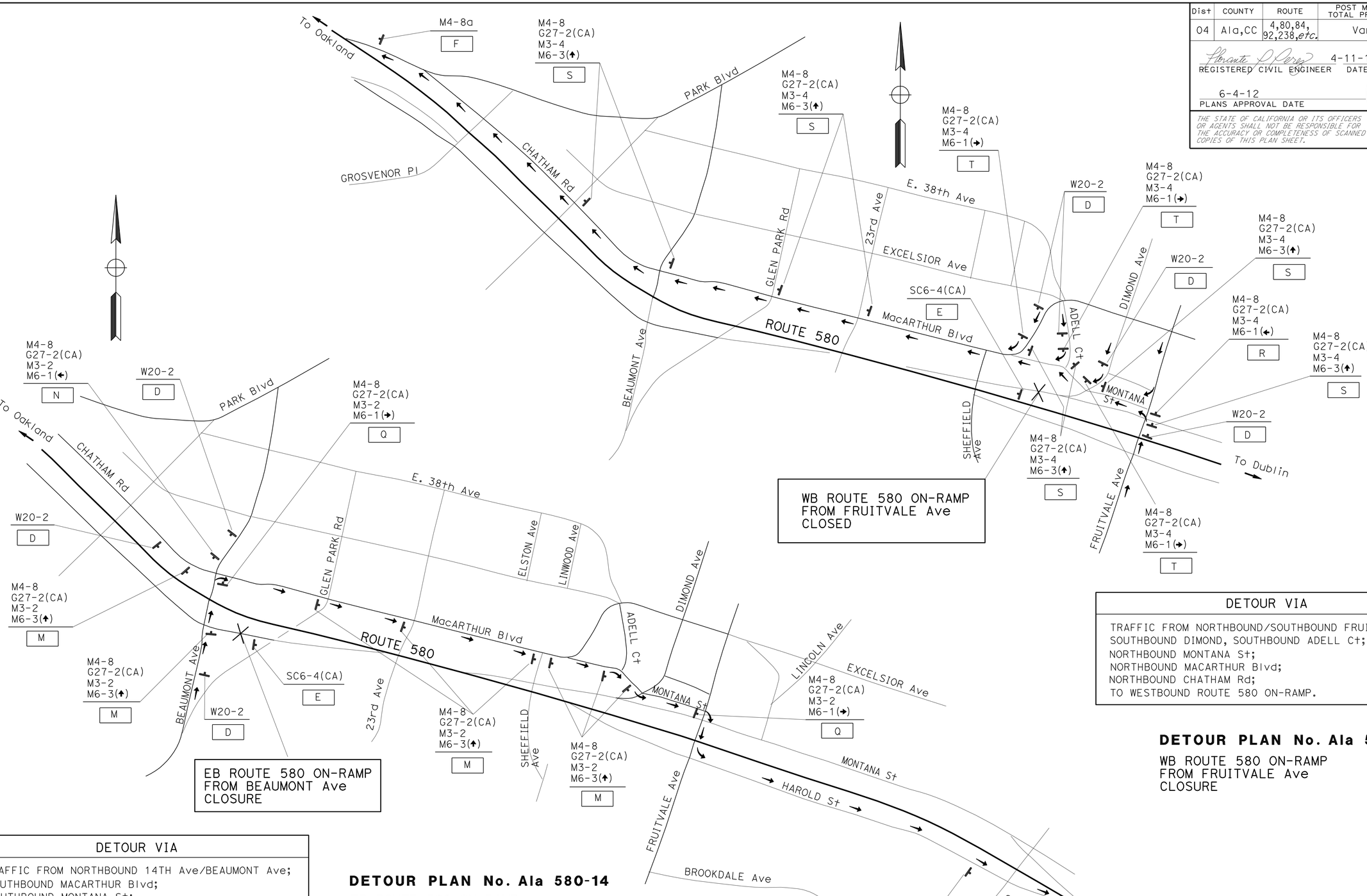

WB ROUTE 580 ON-RAMP
FROM FRUITVALE Ave
CLOSED

EB ROUTE 580 ON-RAMP
FROM BEAUMONT Ave
CLOSURE

DETOUR VIA

TRAFFIC FROM NORTHBOUND/SOUTHBOUND FRUITVALE Ave,
SOUTHBOUND DIMOND, SOUTHBOUND ADELL Ct;
NORTHBOUND MONTANA St;
NORTHBOUND MACARTHUR Blvd;
NORTHBOUND CHATHAM Rd;
TO WESTBOUND ROUTE 580 ON-RAMP.

DETOUR PLAN No. Ala 580-13

WB ROUTE 580 ON-RAMP
FROM FRUITVALE Ave
CLOSURE

DETOUR VIA

TRAFFIC FROM NORTHBOUND 14TH Ave/BEAUMONT Ave;
SOUTHBOUND MACARTHUR Blvd;
SOUTHBOUND MONTANA St;
SOUTHBOUND FRUITVALE Ave;
EASTBOUND HAROLD St;
TO EASTBOUND ROUTE 580 ON-RAMP.

DETOUR PLAN No. Ala 580-14

EB ROUTE 580 ON-RAMP
FROM BEAUMONT Ave
CLOSURE

CONSTRUCTION AREA SIGNS

NO SCALE

CS-9

FOR NOTES, ABBREVIATIONS AND LEGEND, SEE SHEET CS-1

THIS PLAN ACCURATE FOR CONSTRUCTION AREA SIGN WORK ONLY

STATE OF CALIFORNIA - DEPARTMENT OF TRANSPORTATION
Caltrans®
TRAFFIC

FUNCTIONAL SUPERVISOR: LOURDES DAVID
CALCULATED-DESIGNED BY: LEOPOLDO G. BONGATO
CHECKED BY: FLORANTE P. PEREZ
REVISED BY / DATE REVISED

LAST REVISION 04-13-12
DATE PLOTTED => 04-JUN-2012
TIME PLOTTED => 16:47

Dist	COUNTY	ROUTE	POST MILES TOTAL PROJECT	SHEET No.	TOTAL SHEETS
04	Ala,CC	4,80,84, 92,238,etc.	Var	54	141

Florante P. Perez 4-11-12
REGISTERED CIVIL ENGINEER DATE

6-4-12
PLANS APPROVAL DATE

REGISTERED PROFESSIONAL ENGINEER
Florante P. Perez
No. 41030
Exp. 3-31-13
CIVIL
STATE OF CALIFORNIA

THE STATE OF CALIFORNIA OR ITS OFFICERS OR AGENTS SHALL NOT BE RESPONSIBLE FOR THE ACCURACY OR COMPLETENESS OF SCANNED COPIES OF THIS PLAN SHEET.

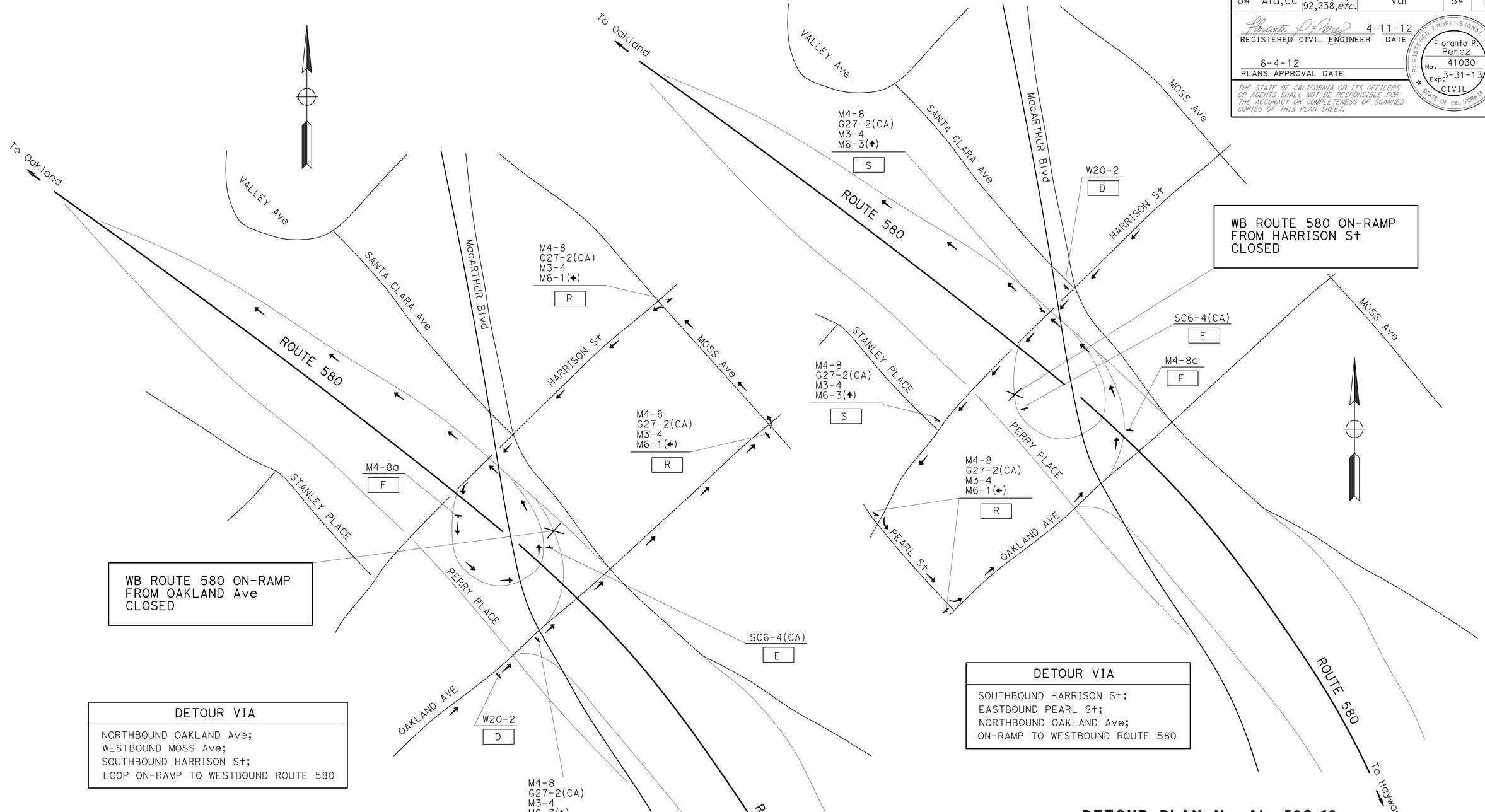

DETOUR PLAN No. Ala 580-15
WB ROUTE 580 ON-RAMP
FROM OAKLAND Ave
CLOSURE

DETOUR PLAN No. Ala 580-16
WB ROUTE 580 ON-RAMP
FROM HARRISON St
CLOSURE

CONSTRUCTION AREA SIGNS
NO SCALE

CS-10

STATE OF CALIFORNIA - DEPARTMENT OF TRANSPORTATION
Caltrans®
TRAFFIC

FUNCTIONAL SUPERVISOR: LOURDES DAVID
CALCULATED-DESIGNED BY: LEOPOLDO G. BONGATO
CHECKED BY: FLORANTE P. PEREZ
REVISED BY
DATE REVISED

LAST REVISION 04-13-12 | DATE PLOTTED => 04-JUN-2012 | TIME PLOTTED => 16:47

Dist	COUNTY	ROUTE	POST MILES TOTAL PROJECT	SHEET No.	TOTAL SHEETS
04	Ala,CC	4,80,84, 92,238,*etc.*	Var	55	141

REGISTERED CIVIL ENGINEER 4-11-12 DATE

6-4-12
PLANS APPROVAL DATE

REGISTERED PROFESSIONAL ENGINEER Florante P. Perez No. 41030 Exp. 3-31-13 CIVIL STATE OF CALIFORNIA

THE STATE OF CALIFORNIA OR ITS OFFICERS OR AGENTS SHALL NOT BE RESPONSIBLE FOR THE ACCURACY OR COMPLETENESS OF SCANNED COPIES OF THIS PLAN SHEET.

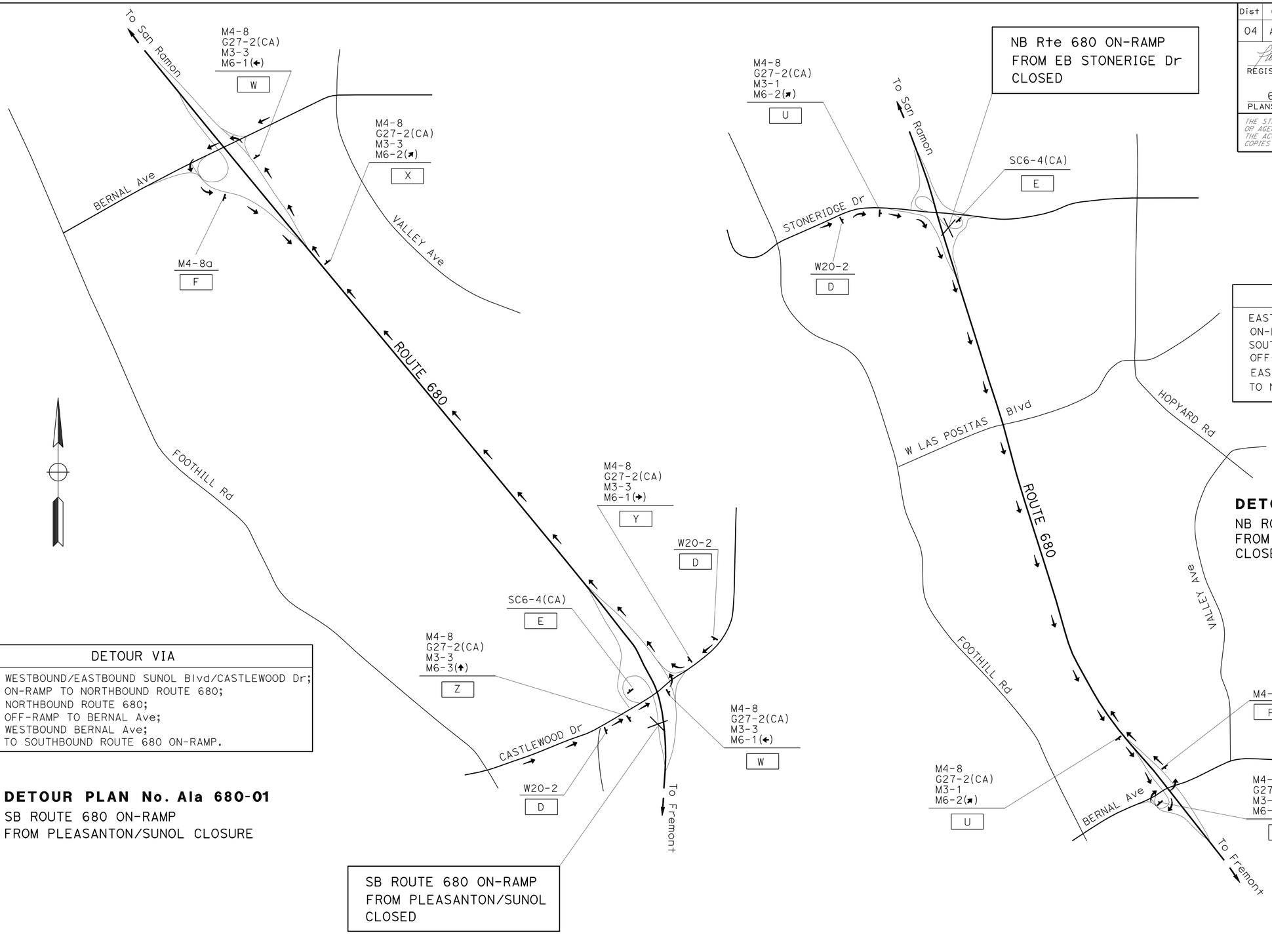

DETOUR VIA

EASTBOUND STONERIDGE Dr;
ON-RAMP TO SOUTHBOUND ROUTE 680;
SOUTHBOUND ROUTE 680;
OFF-RAMP TO BERNAL Ave;
EASTBOUND BERNAL Ave;
TO NORTHBOUND ROUTE 680 ON-RAMP.

DETOUR PLAN No. Ala 680-02

NB ROUTE 680 ON-RAMP
FROM EB STONERIDGE Dr
CLOSED

DETOUR VIA

WESTBOUND/EASTBOUND SUNOL Blvd/CASTLEWOOD Dr;
ON-RAMP TO NORTHBOUND ROUTE 680;
NORTHBOUND ROUTE 680;
OFF-RAMP TO BERNAL Ave;
WESTBOUND BERNAL Ave;
TO SOUTHBOUND ROUTE 680 ON-RAMP.

DETOUR PLAN No. Ala 680-01

SB ROUTE 680 ON-RAMP
FROM PLEASANTON/SUNOL CLOSURE

SB ROUTE 680 ON-RAMP
FROM PLEASANTON/SUNOL
CLOSED

CONSTRUCTION AREA SIGNS

NO SCALE

CS-11

STATE OF CALIFORNIA - DEPARTMENT OF TRANSPORTATION
Caltrans TRAFFIC

FUNCTIONAL SUPERVISOR: LOURDES DAVID
CALCULATED-DESIGNED BY: LEOPOLDO G. BONGATO
CHECKED BY: FLORANTE P. PEREZ
REVISED BY / DATE REVISED

LAST REVISION 04-13-12 | DATE PLOTTED => 04-JUN-2012 | TIME PLOTTED => 16:47

Dist	COUNTY	ROUTE	POST MILES TOTAL PROJECT	SHEET No.	TOTAL SHEETS
04	Ala,CC	4,80,84, 92,238,etc.	Var	56	141

REGISTERED CIVIL ENGINEER 4-11-12 DATE

6-4-12
PLANS APPROVAL DATE

REGISTERED PROFESSIONAL ENGINEER Florante P. Perez No. 41030 Exp. 3-31-13 CIVIL STATE OF CALIFORNIA

THE STATE OF CALIFORNIA OR ITS OFFICERS OR AGENTS SHALL NOT BE RESPONSIBLE FOR THE ACCURACY OR COMPLETENESS OF SCANNED COPIES OF THIS PLAN SHEET.

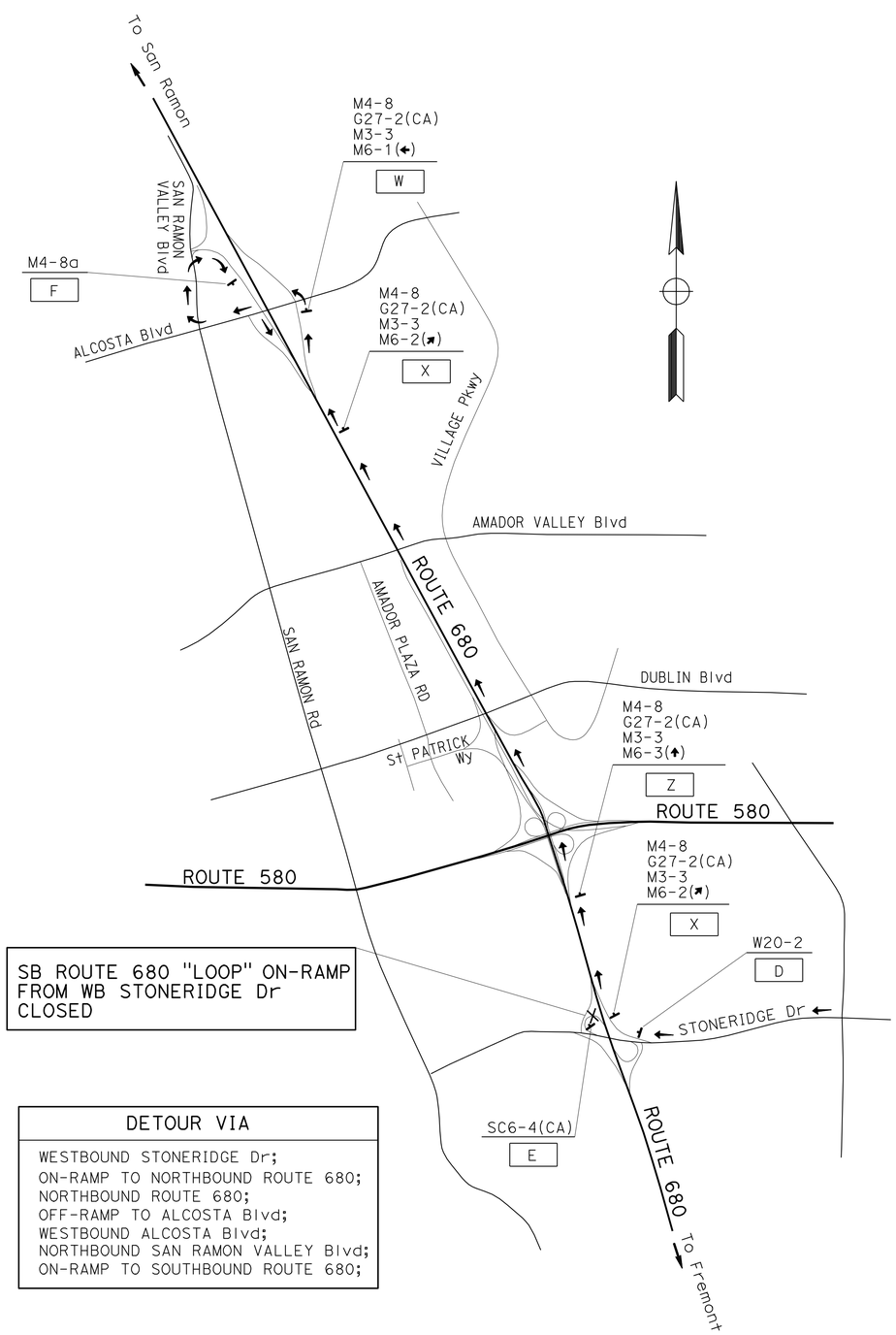

SB ROUTE 680 "LOOP" ON-RAMP FROM WB STONERIDGE Dr CLOSED

DETOUR VIA
WESTBOUND STONERIDGE Dr;
ON-RAMP TO NORTHBOUND ROUTE 680;
NORTHBOUND ROUTE 680;
OFF-RAMP TO ALCOSTA Blvd;
WESTBOUND ALCOSTA Blvd;
NORTHBOUND SAN RAMON VALLEY Blvd;
ON-RAMP TO SOUTHBOUND ROUTE 680;

DETOUR PLAN No. Ala 680-03
SB ROUTE 680 ON-RAMP
FROM WB STONERIDGE Dr CLOSURE

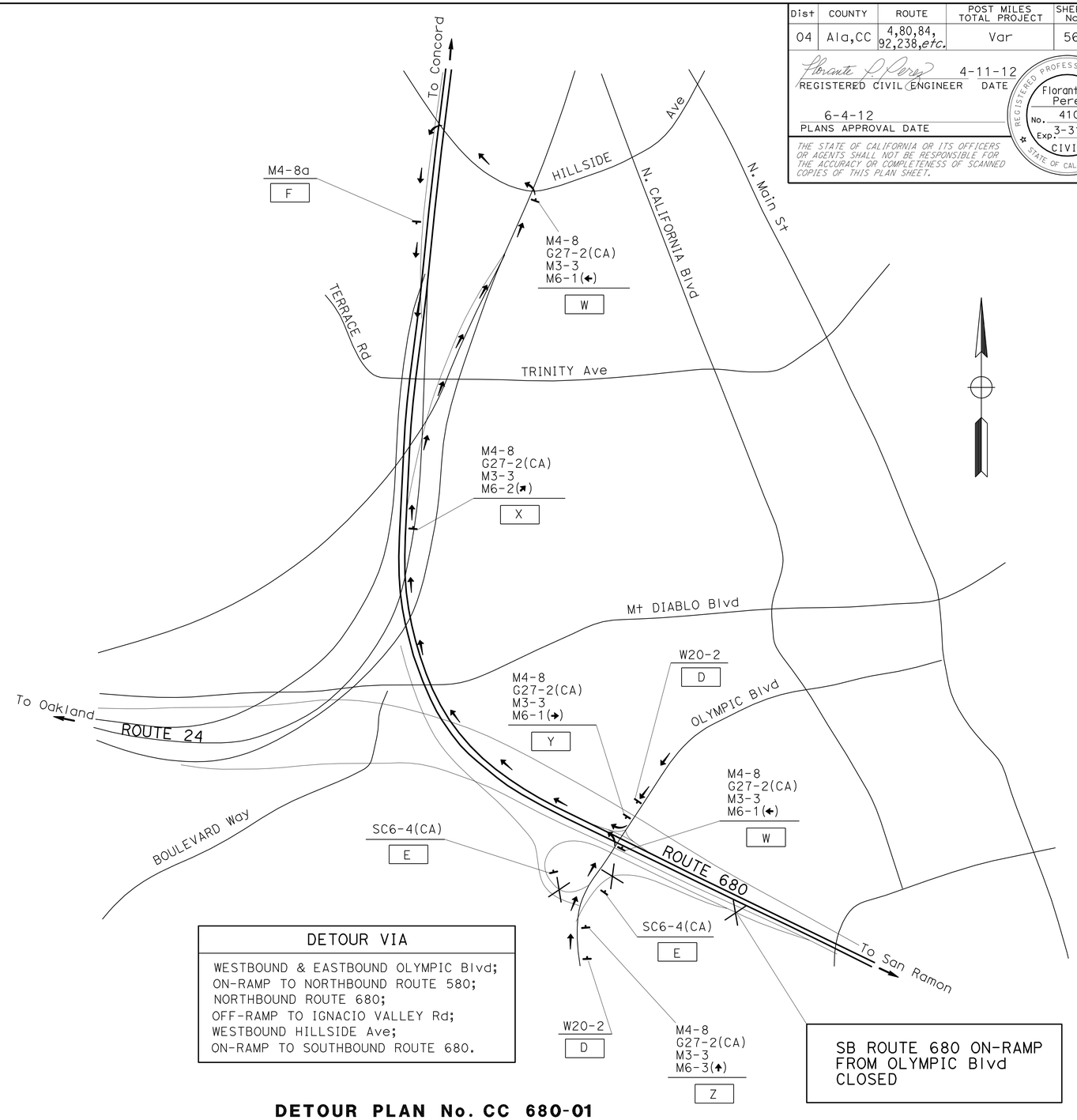

DETOUR VIA
WESTBOUND & EASTBOUND OLYMPIC Blvd;
ON-RAMP TO NORTHBOUND ROUTE 580;
NORTHBOUND ROUTE 680;
OFF-RAMP TO IGNACIO VALLEY Rd;
WESTBOUND HILLSIDE Ave;
ON-RAMP TO SOUTHBOUND ROUTE 680.

SB ROUTE 680 ON-RAMP FROM OLYMPIC Blvd CLOSED

DETOUR PLAN No. CC 680-01
SB ROUTE 680 ON-RAMP
FROM OLYMPIC Blvd
CLOSURE

CONSTRUCTION AREA SIGNS

NO SCALE

CS-12

STATE OF CALIFORNIA - DEPARTMENT OF TRANSPORTATION
Caltrans
TRAFFIC

FUNCTIONAL SUPERVISOR: LOURDES DAVID
CALCULATED-DESIGNED BY: LEOPOLDO G. BONGATO
CHECKED BY: FLORANTE P. PEREZ
REVISED BY
DATE REVISED

LAST REVISION 05-17-12
DATE PLOTTED => 04-JUN-2012
TIME PLOTTED => 16:47

Dist	COUNTY	ROUTE	POST MILES TOTAL PROJECT	SHEET No.	TOTAL SHEETS
04	Ala,CC	4,80,84, 92,238,etc.	Var	57	141

REGISTERED CIVIL ENGINEER 4-11-12 DATE

6-4-12
PLANS APPROVAL DATE

REGISTERED PROFESSIONAL ENGINEER
Florante P. Perez
No. 41030
Exp. 3-31-13
CIVIL
STATE OF CALIFORNIA

THE STATE OF CALIFORNIA OR ITS OFFICERS OR AGENTS SHALL NOT BE RESPONSIBLE FOR THE ACCURACY OR COMPLETENESS OF SCANNED COPIES OF THIS PLAN SHEET.

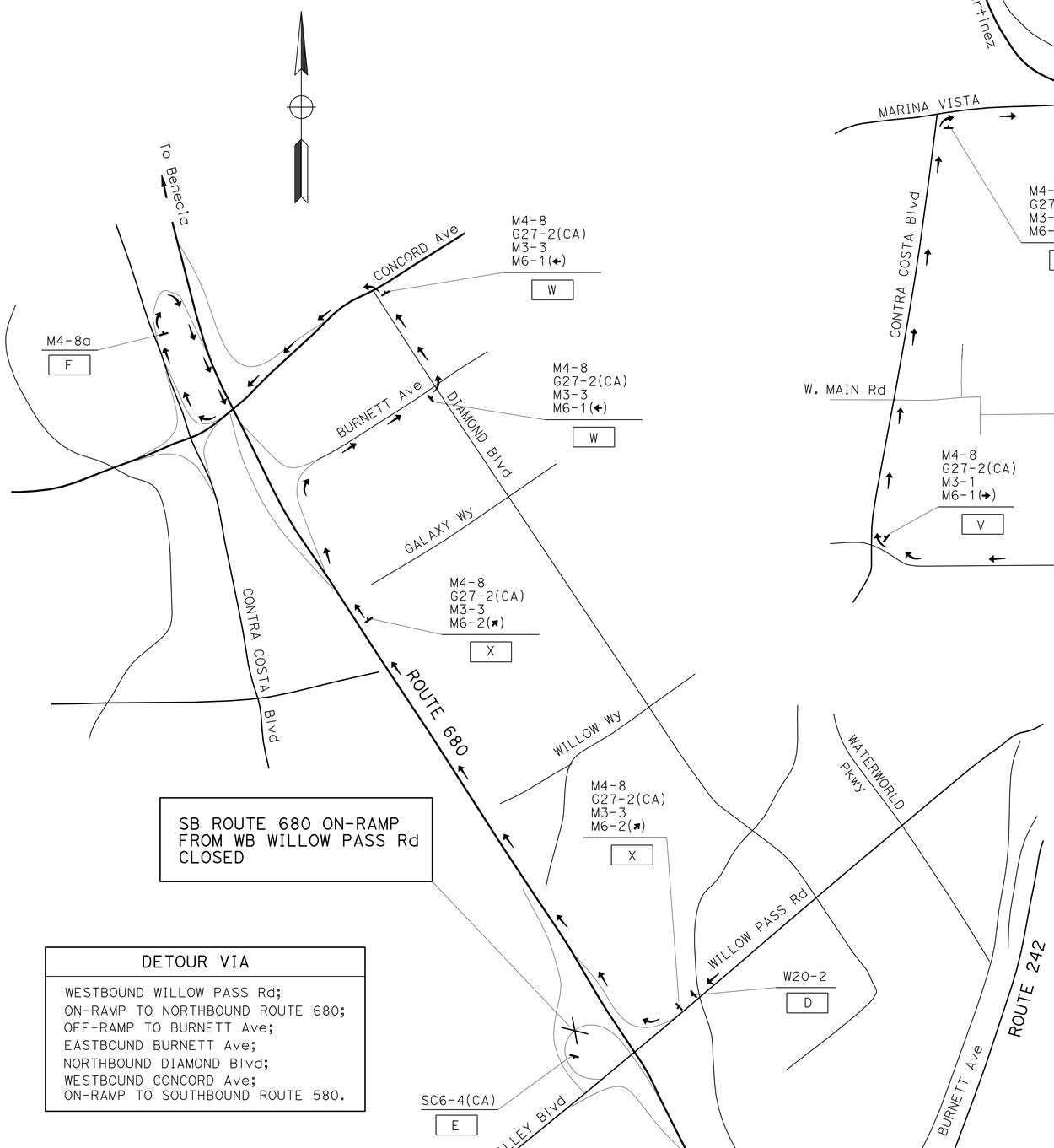

SB ROUTE 680 ON-RAMP
FROM WB WILLOW PASS Rd
CLOSED

DETOUR VIA
WESTBOUND WILLOW PASS Rd; ON-RAMP TO NORTHBOUND ROUTE 680; OFF-RAMP TO BURNETT Ave; EASTBOUND BURNETT Ave; NORTHBOUND DIAMOND Blvd; WESTBOUND CONCORD Ave; ON-RAMP TO SOUTHBOUND ROUTE 580.

DETOUR PLAN No. CC 680-02

SB ROUTE 680 ON-RAMP
FROM WB WILLOW PASS Rd
CLOSURE

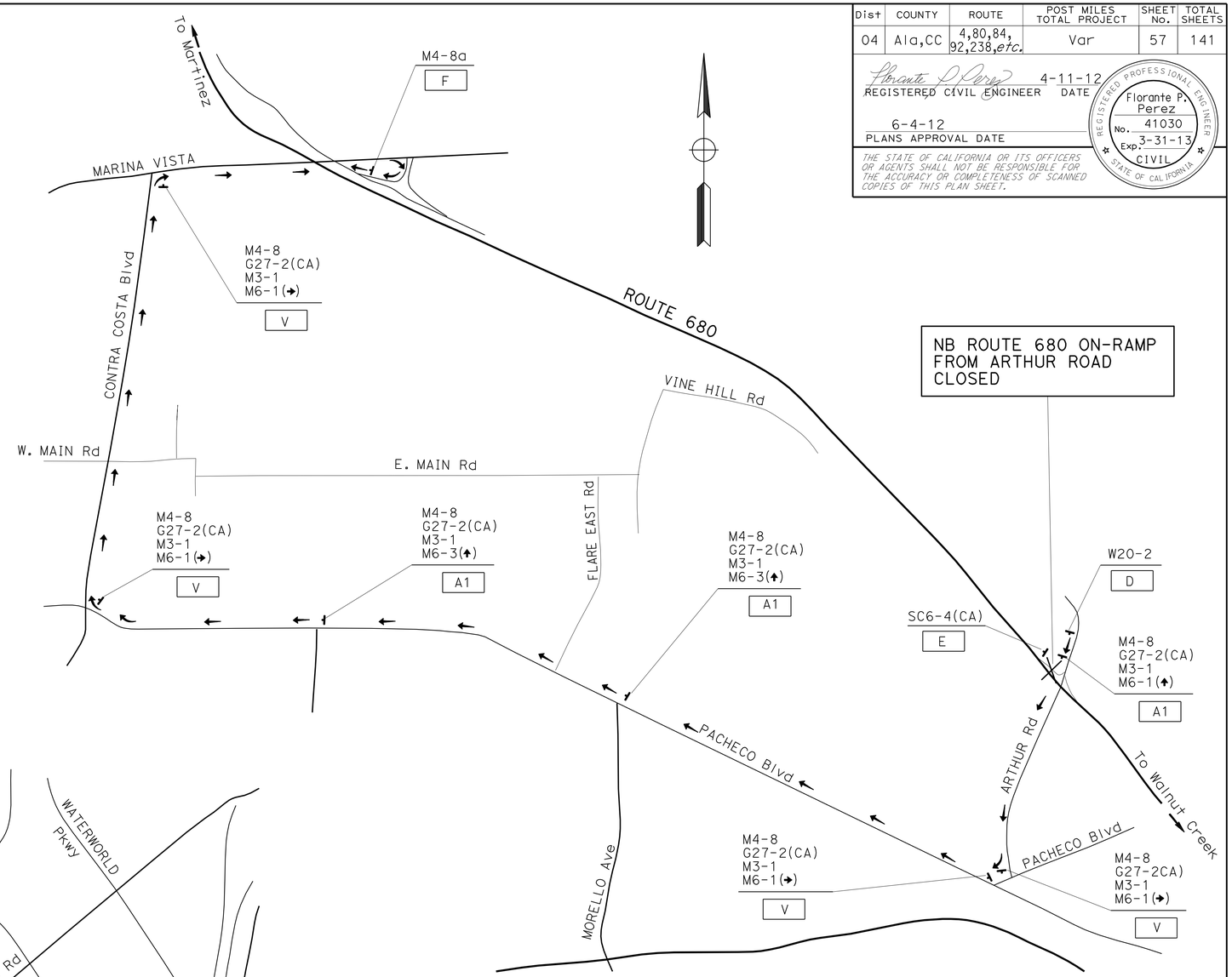

NB ROUTE 680 ON-RAMP
FROM ARTHUR ROAD
CLOSED

DETOUR VIA
WESTBOUND & EASTBOUND ARTHUR Rd; NORTHBOUND PACHECO Blvd; NORTHBOUND SHELL Ave; EASTBOUND MARINA VISTA; ON-RAMP TO NORTHBOUND ROUTE 680

DETOUR PLAN No. CC 680-03

NB ROUTE 680 ON-RAMP
FROM ARTHUR ROAD
CLOSED

CONSTRUCTION AREA SIGN

NO SCALE

CS-13

STATE OF CALIFORNIA - DEPARTMENT OF TRANSPORTATION
Caltrans
TRAFFIC

REVISED BY	DATE REVISED

CALCULATED-DESIGNED BY	LEOPOLDO G. BONGATO
CHECKED BY	FLORANTE P. PEREZ
FUNCTIONAL SUPERVISOR	LOURDES DAVID

LAST REVISION 04-13-12
DATE PLOTTED => 04-JUN-2012
TIME PLOTTED => 16:47

Dist	COUNTY	ROUTE	POST MILES TOTAL PROJECT	SHEET No.	TOTAL SHEETS
04	Ala,CC	4,80,84, 92,238,etc.	Var	58	141

REGISTERED CIVIL ENGINEER 4-11-12 DATE

6-4-12
PLANS APPROVAL DATE

REGISTERED PROFESSIONAL ENGINEER
Florante P. Perez
No. 41030
Exp. 3-31-13
CIVIL
STATE OF CALIFORNIA

THE STATE OF CALIFORNIA OR ITS OFFICERS OR AGENTS SHALL NOT BE RESPONSIBLE FOR THE ACCURACY OR COMPLETENESS OF SCANNED COPIES OF THIS PLAN SHEET.

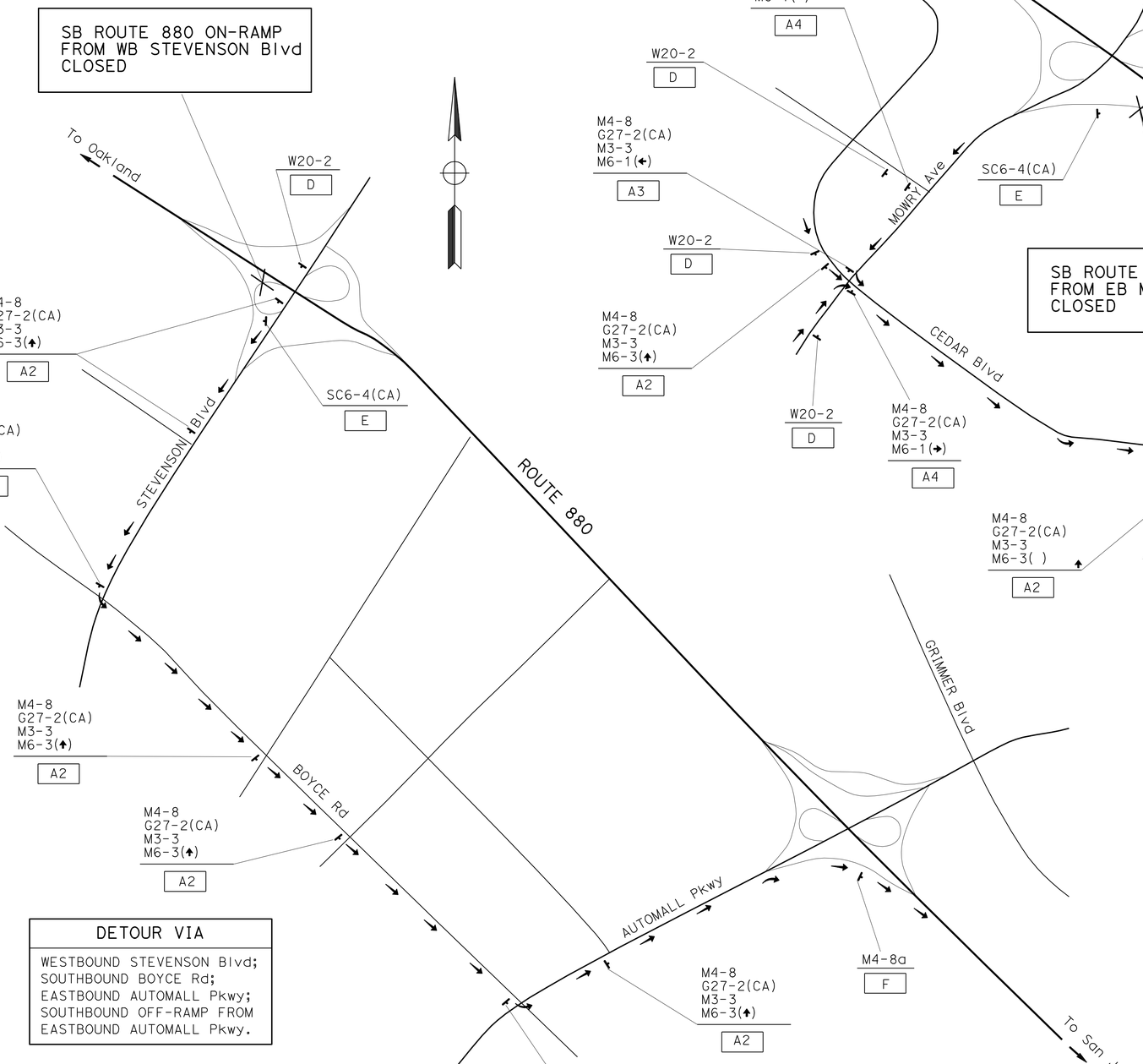

DETOUR VIA
WESTBOUND STEVENSON Blvd; SOUTHBOUND BOYCE Rd; EASTBOUND AUTOMALL Pkwy; SOUTHBOUND OFF-RAMP FROM EASTBOUND AUTOMALL Pkwy.

DETOUR PLAN No. Ala 880-01

SB ROUTE 880 ON-RAMP
FROM WB STEVENSON Blvd CLOSURE

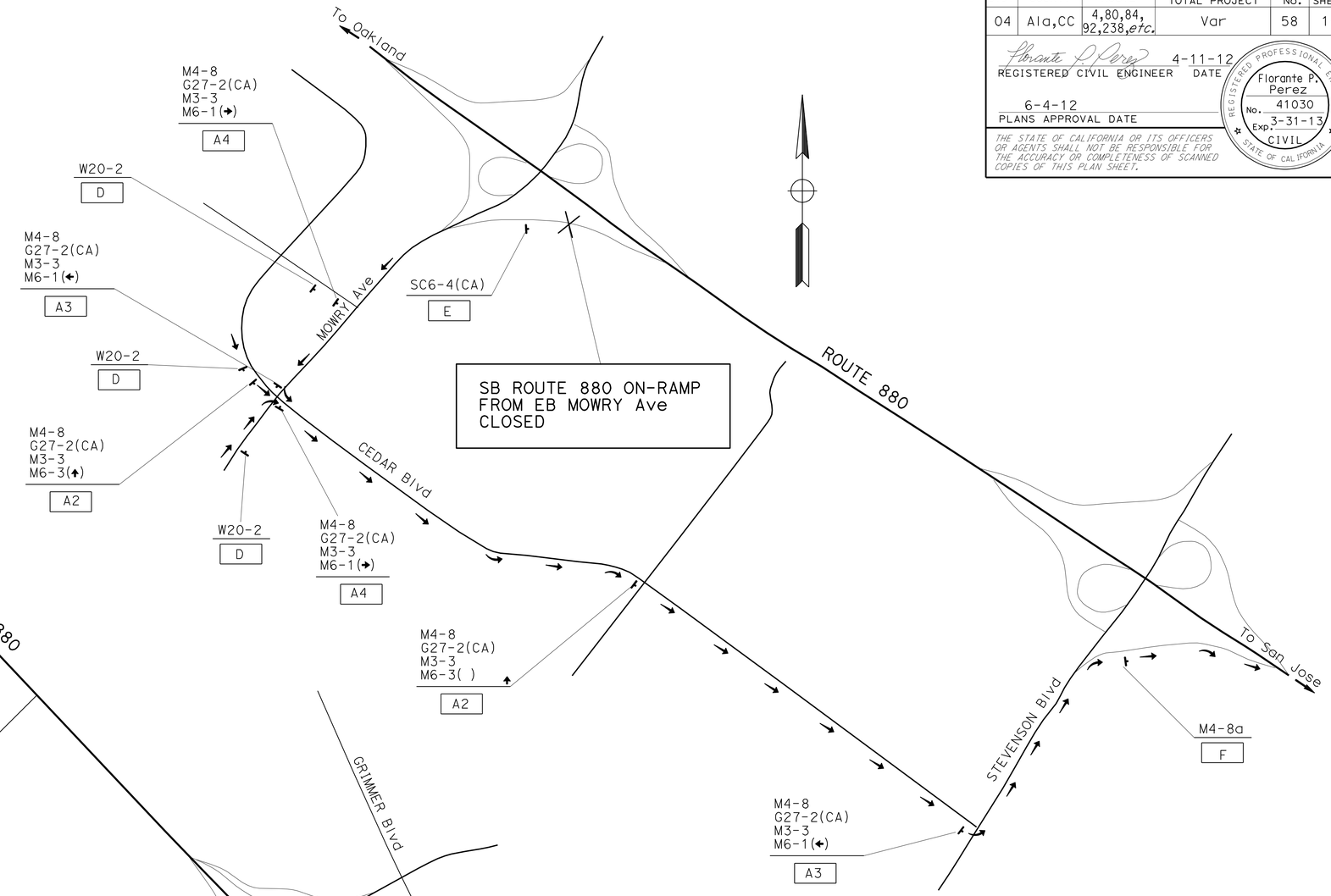

DETOUR VIA
EASTBOUND MOWRY Ave; SOUTHBOUND CEDAR Blvd; EASTBOUND STEVENSON Blvd; TO SOUTHBOUND ROUTE 880 ON-RAMP.

DETOUR PLAN No. Ala 880-02

SB ROUTE 880 ON-RAMP
FROM EB MOWRY Ave CLOSURE

CONSTRUCTION AREA SIGNS

NO SCALE

CS-14

STATE OF CALIFORNIA - DEPARTMENT OF TRANSPORTATION
Caltrans
TRAFFIC

FUNCTIONAL SUPERVISOR: LOURDES DAVID
CALCULATED-DESIGNED BY: LEOPOLDO G. BONGATO
CHECKED BY: FLORANTE P. PEREZ
REVISED BY
DATE REVISED

LAST REVISION 04-16-12
DATE PLOTTED => 04-JUN-2012
TIME PLOTTED => 16:47

Dist	COUNTY	ROUTE	POST MILES TOTAL PROJECT	SHEET No.	TOTAL SHEETS
04	Ala,CC	4,80,84, 92,238,*etc.*	Var	59	141

Florante P. Perez 4-11-12
REGISTERED CIVIL ENGINEER DATE

6-4-12
PLANS APPROVAL DATE

REGISTERED PROFESSIONAL ENGINEER
Florante P. Perez
No. 41030
Exp. 3-31-13
CIVIL
STATE OF CALIFORNIA

THE STATE OF CALIFORNIA OR ITS OFFICERS OR AGENTS SHALL NOT BE RESPONSIBLE FOR THE ACCURACY OR COMPLETENESS OF SCANNED COPIES OF THIS PLAN SHEET.

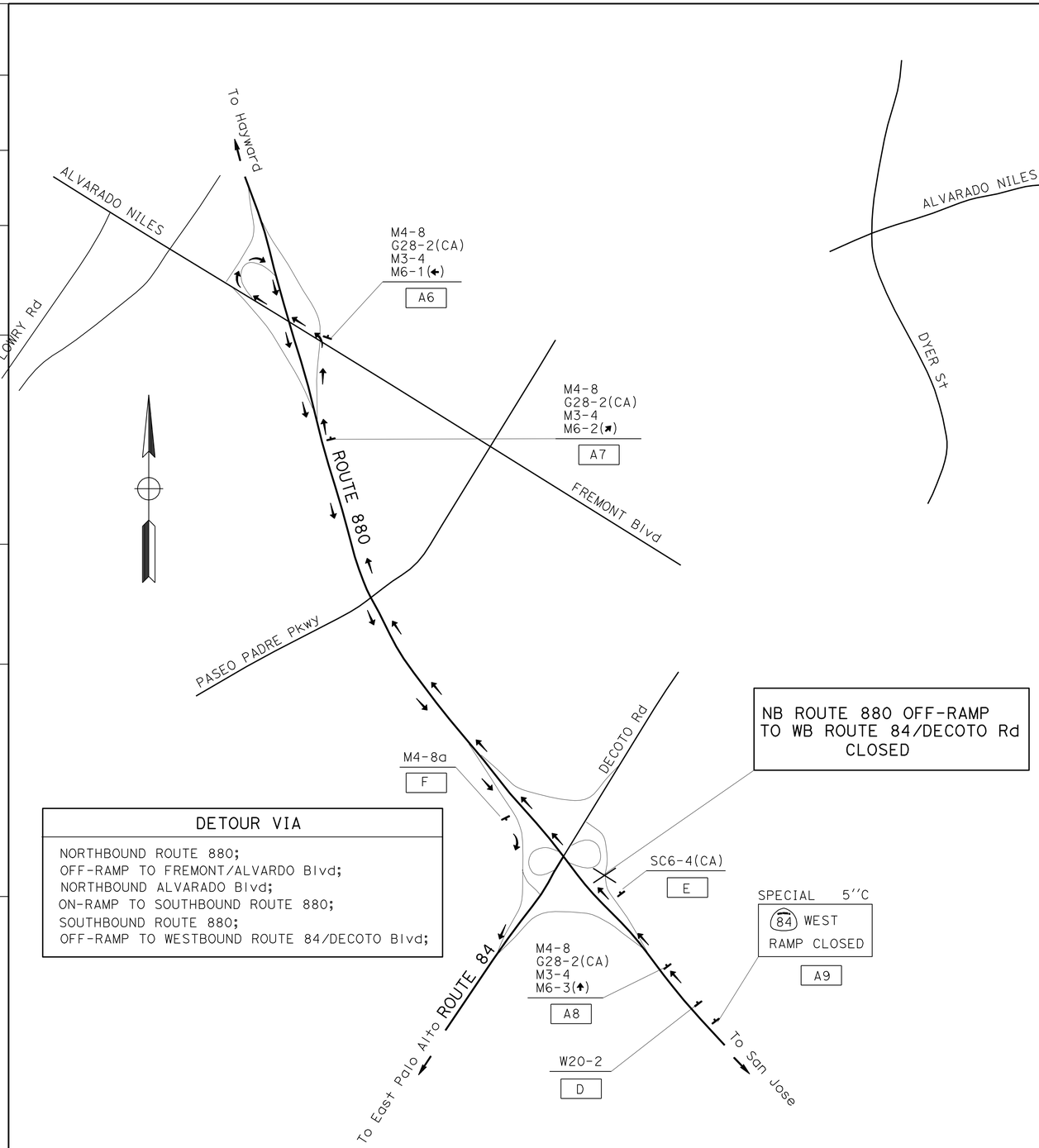

DETOUR VIA
NORTHBOUND ROUTE 880;
OFF-RAMP TO FREMONT/ALVARDO Blvd;
NORTHBOUND ALVARADO Blvd;
ON-RAMP TO SOUTHBOUND ROUTE 880;
SOUTHBOUND ROUTE 880;
OFF-RAMP TO WESTBOUND ROUTE 84/DECOTO Blvd;

DETOUR PLAN No. Ala 880-03

NB ROUTE 880 OFF-RAMP TO
WB ROUTE 84/DECOTO Rd CLOSURE

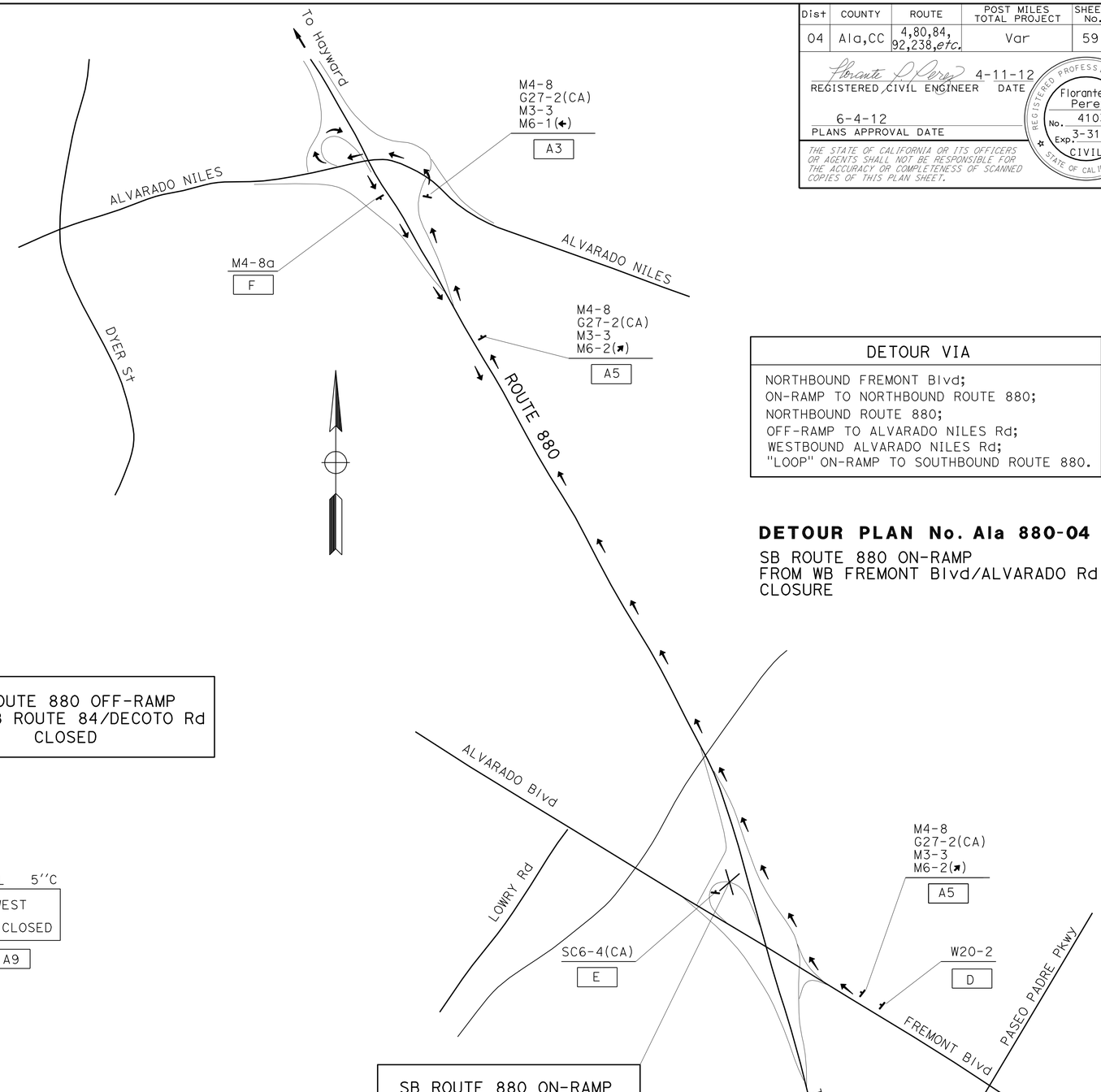

DETOUR VIA
NORTHBOUND FREMONT Blvd;
ON-RAMP TO NORTHBOUND ROUTE 880;
NORTHBOUND ROUTE 880;
OFF-RAMP TO ALVARADO NILES Rd;
WESTBOUND ALVARADO NILES Rd;
"LOOP" ON-RAMP TO SOUTHBOUND ROUTE 880.

DETOUR PLAN No. Ala 880-04

SB ROUTE 880 ON-RAMP
FROM WB FREMONT Blvd/ALVARADO Rd
CLOSURE

SB ROUTE 880 ON-RAMP
FROM WB FREMONT Blvd/
ALVARADO Rd CLOSED

CONSTRUCTION AREA SIGNS

NO SCALE

CS-15

STATE OF CALIFORNIA - DEPARTMENT OF TRANSPORTATION
Caltrans
TRAFFIC

FUNCTIONAL SUPERVISOR: LOURDES DAVID
CALCULATED-DESIGNED BY: LEOPOLDO G. BONGATO
CHECKED BY: FLORANTE P. PEREZ
REVISED BY
DATE REVISED

LAST REVISION 04-16-12
DATE PLOTTED => 04-JUN-2012
TIME PLOTTED => 16:47

Dist	COUNTY	ROUTE	POST MILES TOTAL PROJECT	SHEET No.	TOTAL SHEETS
04	Ala,CC	4,80,84, 92,238,etc.	Var	60	141

Florante P. Perez 4-11-12
REGISTERED CIVIL ENGINEER DATE

6-4-12
PLANS APPROVAL DATE

REGISTERED PROFESSIONAL ENGINEER Florante P. Perez No. 41030 Exp. 3-31-13 CIVIL STATE OF CALIFORNIA

THE STATE OF CALIFORNIA OR ITS OFFICERS OR AGENTS SHALL NOT BE RESPONSIBLE FOR THE ACCURACY OR COMPLETENESS OF SCANNED COPIES OF THIS PLAN SHEET.

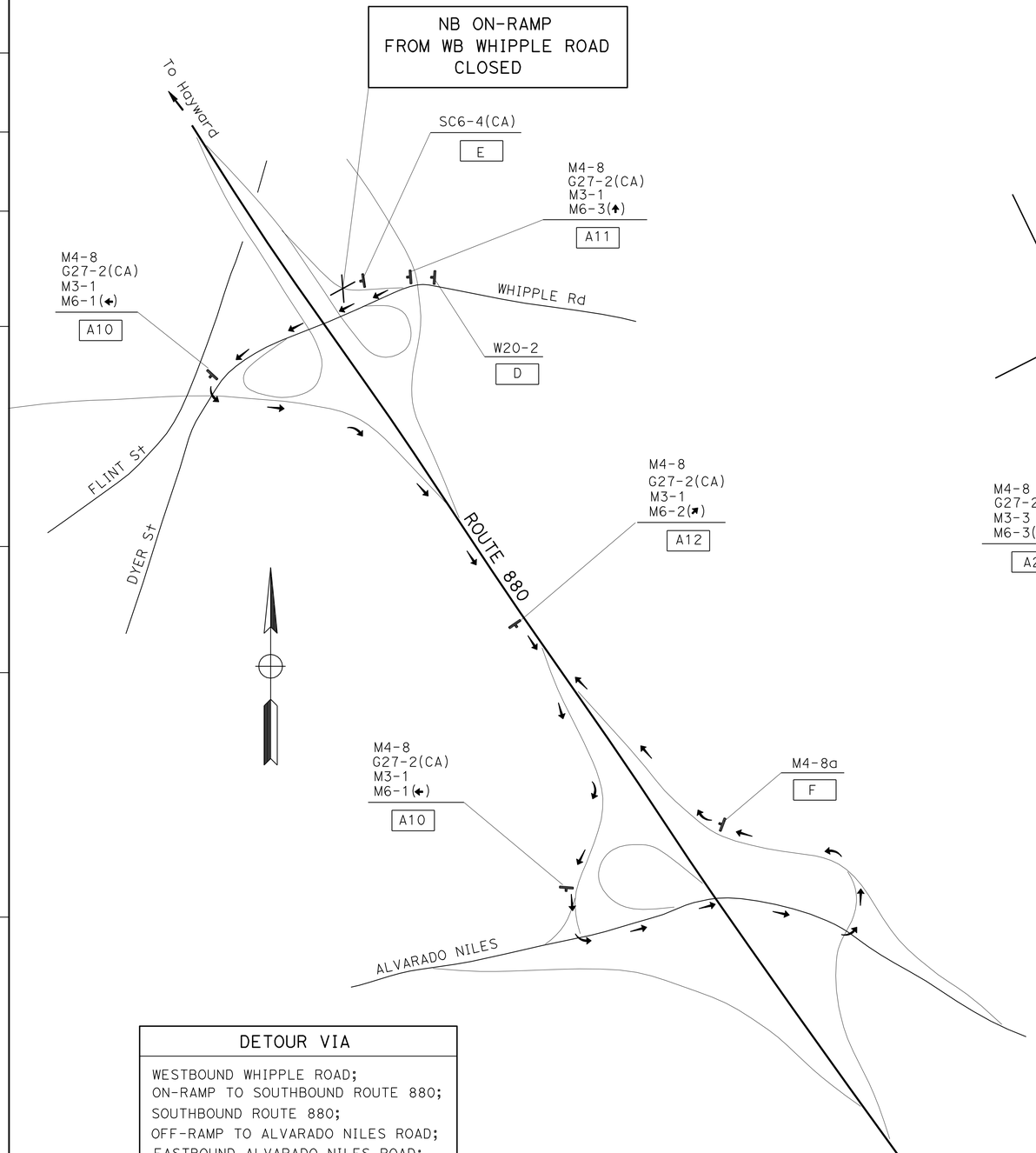

DETOUR VIA
WESTBOUND WHIPPLE ROAD; ON-RAMP TO SOUTHBOUND ROUTE 880; SOUTHBOUND ROUTE 880; OFF-RAMP TO ALVARADO NILES ROAD; EASTBOUND ALVARADO NILES ROAD; TO NORTHBOUND ROUTE 880 ON-RAMP.

DETOUR PLAN No. Ala 880-05

NB Rte 880 ON-RAMP
FROM WB WHIPPLE ROAD CLOSURE

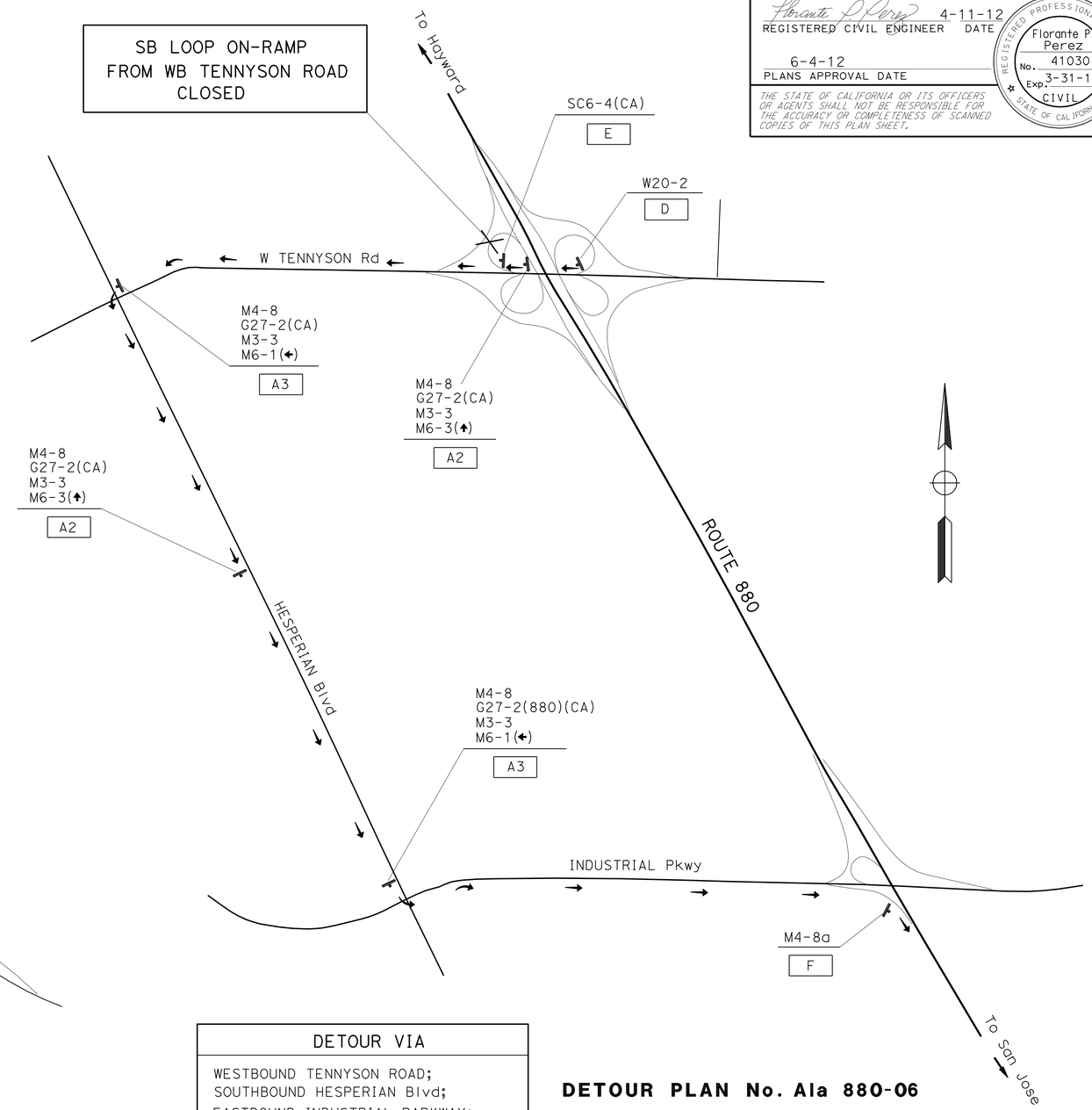

DETOUR VIA
WESTBOUND TENNYSON ROAD; SOUTHBOUND HESPERIAN Blvd; EASTBOUND INDUSTRIAL PARKWAY; ON-RAMP TO SOUTHBOUND ROUTE 680.

DETOUR PLAN No. Ala 880-06

SB ROUTE 880 ON-RAMP
FROM WB TENNYSON ROAD CLOSURE

FOR NOTES, ABBREVIATIONS AND LEGEND, SEE SHEET CS-1

THIS PLAN ACCURATE FOR CONSTRUCTION AREA SIGN WORK ONLY

CONSTRUCTION AREA SIGNS

NO SCALE

CS-16

STATE OF CALIFORNIA - DEPARTMENT OF TRANSPORTATION
Caltrans
TRAFFIC

FUNCTIONAL SUPERVISOR: LOURDES DAVID
CALCULATED-DESIGNED BY: LEOPOLDO G. BONGATO
CHECKED BY: FLORANTE P. PEREZ
REVISED BY
DATE REVISED

LAST REVISION 04-16-12 | DATE PLOTTED => 04-JUN-2012 | TIME PLOTTED => 16:47

Dist	COUNTY	ROUTE	POST MILES TOTAL PROJECT	SHEET No.	TOTAL SHEETS
04	Ala,CC	4,80,84, 92,238,etc.	Var	61	141

Florante P. Perez 4-11-12
REGISTERED CIVIL ENGINEER DATE

6-4-12
PLANS APPROVAL DATE

REGISTERED PROFESSIONAL ENGINEER
Florante P. Perez
No. 41030
Exp. 3-31-13
CIVIL
STATE OF CALIFORNIA

THE STATE OF CALIFORNIA OR ITS OFFICERS OR AGENTS SHALL NOT BE RESPONSIBLE FOR THE ACCURACY OR COMPLETENESS OF SCANNED COPIES OF THIS PLAN SHEET.

SAN LEANDRO

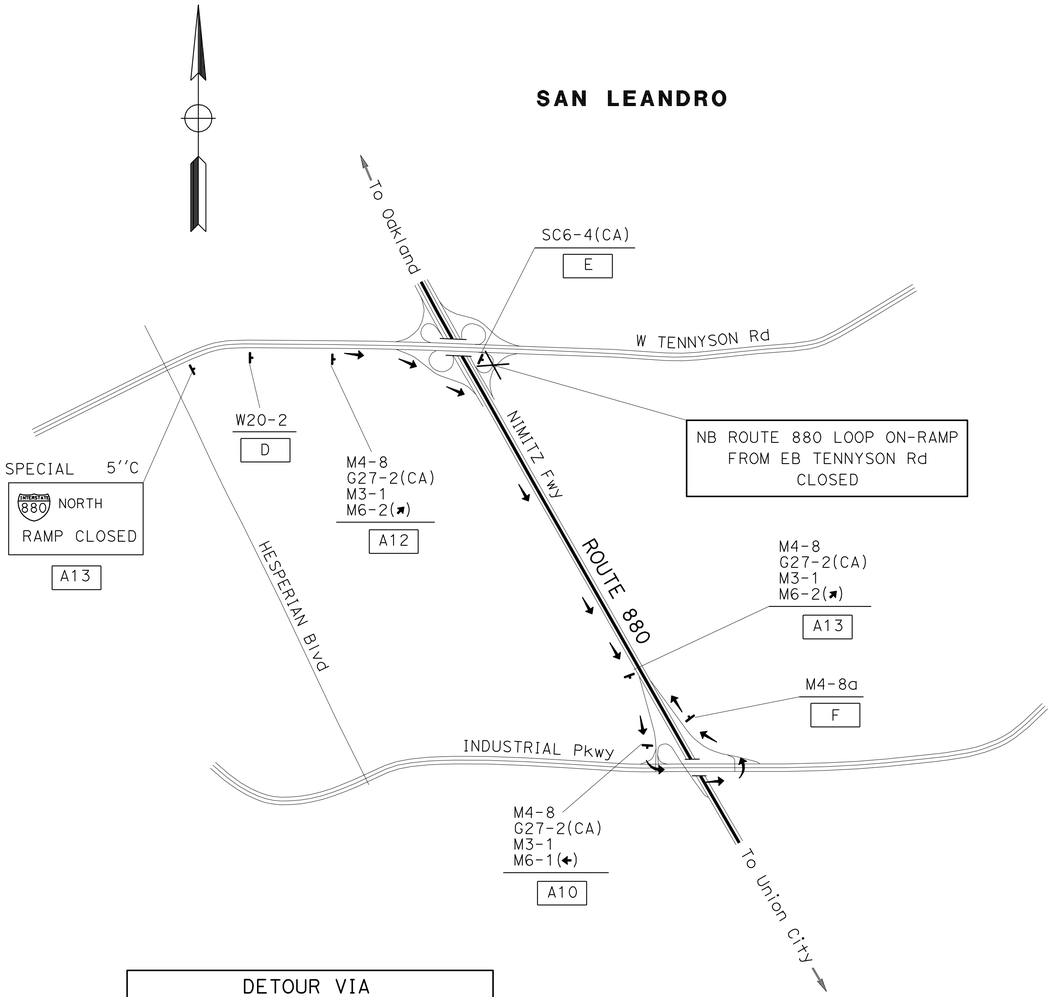

DETOUR VIA
EASTBOUND TENNYSON Rd; ON-RAMP TO SOUTHBOUND ROUTE 880; SOUTHBOUND ROUTE 680; OFF-RAMP TO INDUSTRIAL Pkwy; EASTBOUND INDUSTRIAL Pkwy; ON-RAMP TO NORTHBOUND ROUTE 880.

DETOUR PLAN No. Ala 880-07
NB ROUTE 880 LOOP ON-RAMP
FROM EB TENNYSON Rd
CLOSURE

SAN LORENZO

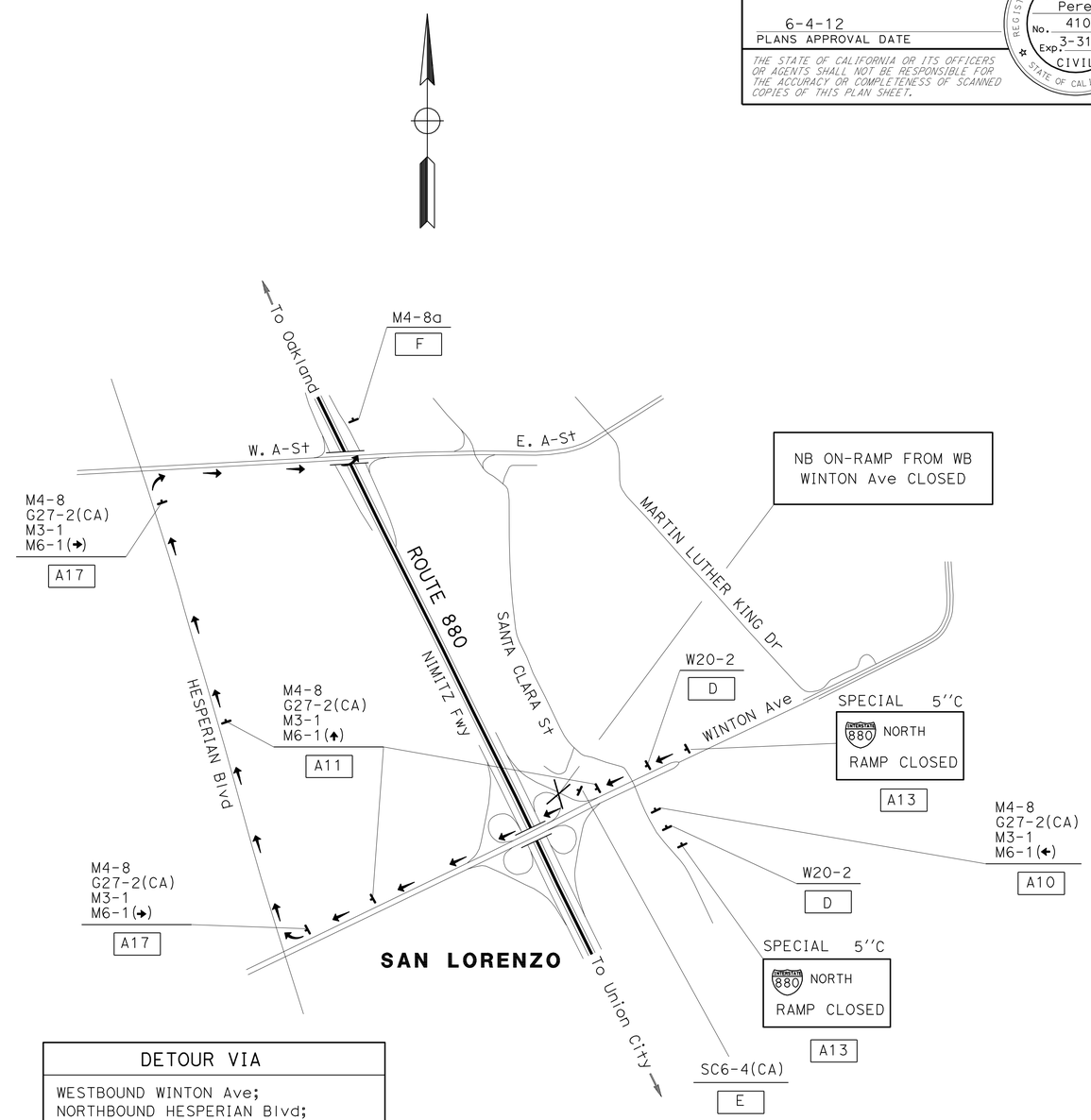

DETOUR VIA
WESTBOUND WINTON Ave; NORTHBOUND HESPERIAN Blvd; EASTBOUND W. A St; ON-RAMP TO NORTHBOUND ROUTE 880.

DETOUR PLAN No. Ala 880-08
NB ROUTE 880 ON-RAMP
FROM WB WINTON Ave
CLOSURE

CONSTRUCTION AREA SIGNS
NO SCALE

CS-17

STATE OF CALIFORNIA - DEPARTMENT OF TRANSPORTATION
Caltrans
TRAFFIC

FUNCTIONAL SUPERVISOR: LOURDES DAVID
CALCULATED-DESIGNED BY: LEOPOLDO G. BONGATO
CHECKED BY: FLORANTE P. PEREZ
REVISED BY
DATE REVISED

LAST REVISION 04-16-12
DATE PLOTTED => 05-JUN-2012
TIME PLOTTED => 07:39

Dist	COUNTY	ROUTE	POST MILES TOTAL PROJECT	SHEET No.	TOTAL SHEETS
04	Ala,CC	4,80,84, 92,238,etc.	Var	62	141

REGISTERED CIVIL ENGINEER 4-11-12 DATE

6-4-12
PLANS APPROVAL DATE

REGISTERED PROFESSIONAL ENGINEER Florante P. Perez No. 41030 Exp. 3-31-13 CIVIL STATE OF CALIFORNIA

THE STATE OF CALIFORNIA OR ITS OFFICERS OR AGENTS SHALL NOT BE RESPONSIBLE FOR THE ACCURACY OR COMPLETENESS OF SCANNED COPIES OF THIS PLAN SHEET.

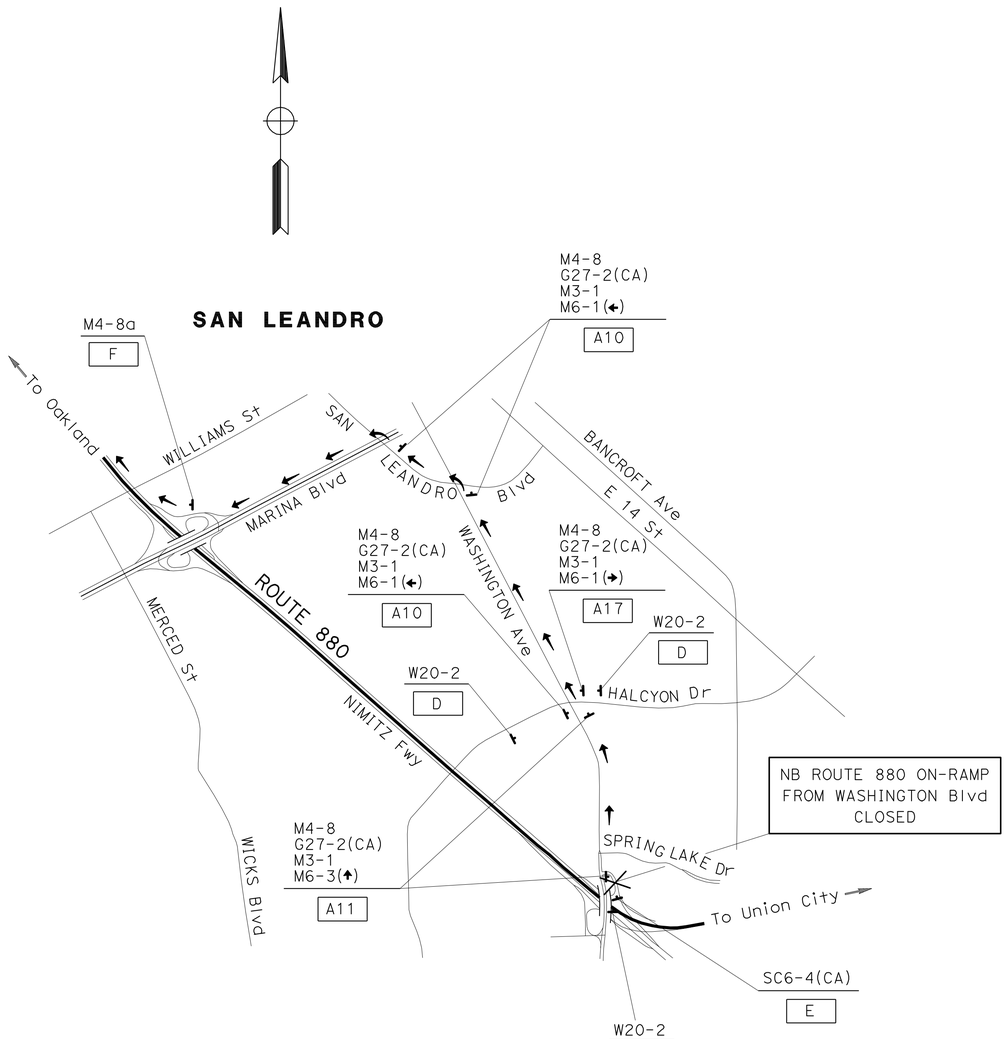

DETOUR VIA
NORTHBOUND & SOUTHBOUND WASHINGTON Blvd; NORTHBOUND SAN LEANDRO Blvd; WESTBOUND MARINA Blvd; ON-RAMP TO NORTHBOUND ROUTE 880.

DETOUR PLAN No. Ala 880-09
NB ROUTE 880 ON-RAMP
FROM WASHINGTON Blvd
CLOSURE

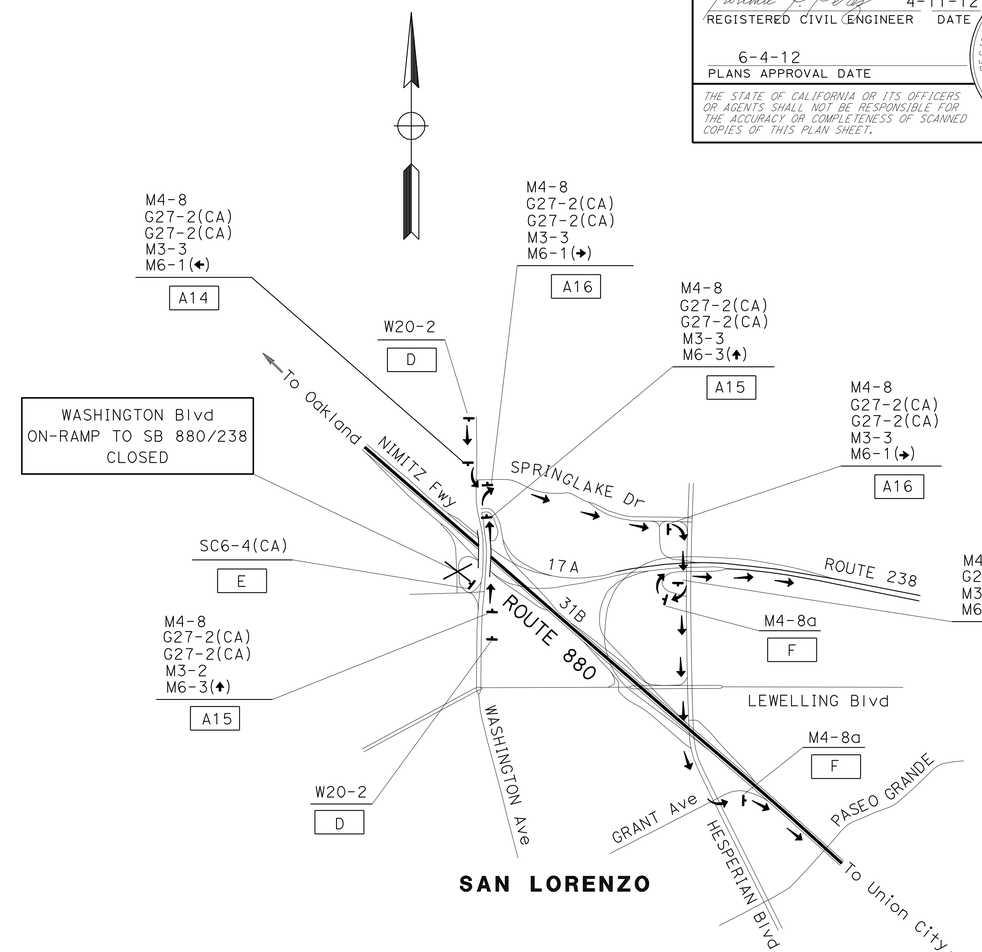

DETOUR VIA
NORTHBOUND & SOUTHBOUND WASHINGTON Blvd; EASTBOUND SPRINGLAKE Dr; SOUTHBOUND HESPERIAN Blvd; FOR TRAFFIC TO SB ROUTE 238 - TO LOOP ON-RAMP TO SB ROUTE 238 FOR TRAFFIC TO SB ROUTE 880 - CONTINUE ON TO SB HESPERIAN Blvd; EASTBOUND GRANT Ave; ON-RAMP TO SB ROUTE 880

DETOUR PLAN No. Ala 880-10
WASHINGTON Blvd ON-RAMP
TO SB 880/238
CLOSURE

CONSTRUCTION AREA SIGNS

NO SCALE

CS-18

STATE OF CALIFORNIA - DEPARTMENT OF TRANSPORTATION
Caltrans®
TRAFFIC

FUNCTIONAL SUPERVISOR: LOURDES DAVID
CALCULATED-DESIGNED BY: LEOPOLDO G. BONGATO
CHECKED BY: FLORANTE P. PEREZ
REVISED BY
DATE REVISED

LAST REVISION 04-16-12 DATE PLOTTED => 04-JUN-2012 TIME PLOTTED => 16:48

Dist	COUNTY	ROUTE	POST MILES TOTAL PROJECT	SHEET No.	TOTAL SHEETS
04	Ala,CC	4,80,84, 92,238,etc.	Var	63	141

Florante P. Perez 4-11-12
REGISTERED CIVIL ENGINEER DATE

6-4-12
PLANS APPROVAL DATE

REGISTERED PROFESSIONAL ENGINEER
Florante P. Perez
No. 41030
Exp. 3-31-13
CIVIL
STATE OF CALIFORNIA

THE STATE OF CALIFORNIA OR ITS OFFICERS OR AGENTS SHALL NOT BE RESPONSIBLE FOR THE ACCURACY OR COMPLETENESS OF SCANNED COPIES OF THIS PLAN SHEET.

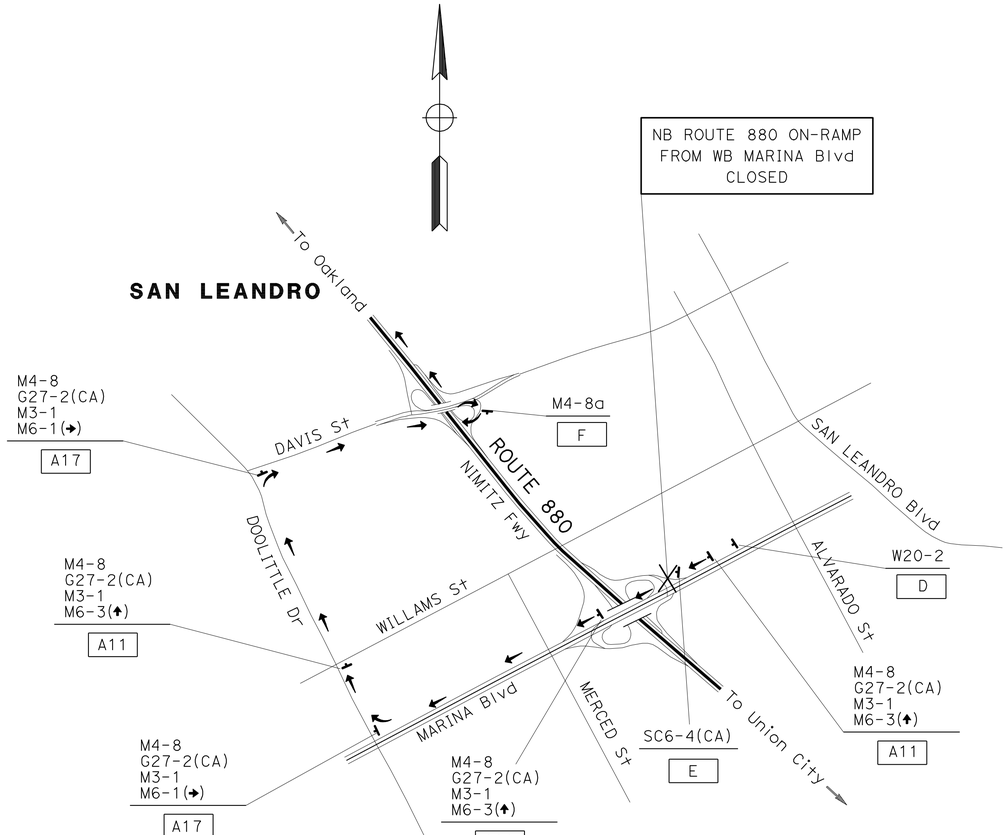

DETOUR VIA
WESTBOUND MARINA Blvd; NORTHBOUND DOOLITTLE Dr; EASTBOUND DAVIS St; LOOP ON-RAMP TO NORTHBOUND ROUTE 880.

DETOUR PLAN No. Ala 880-11
NB ROUTE 880 ON-RAMP
FROM WB MARINA Blvd
CLOSURE

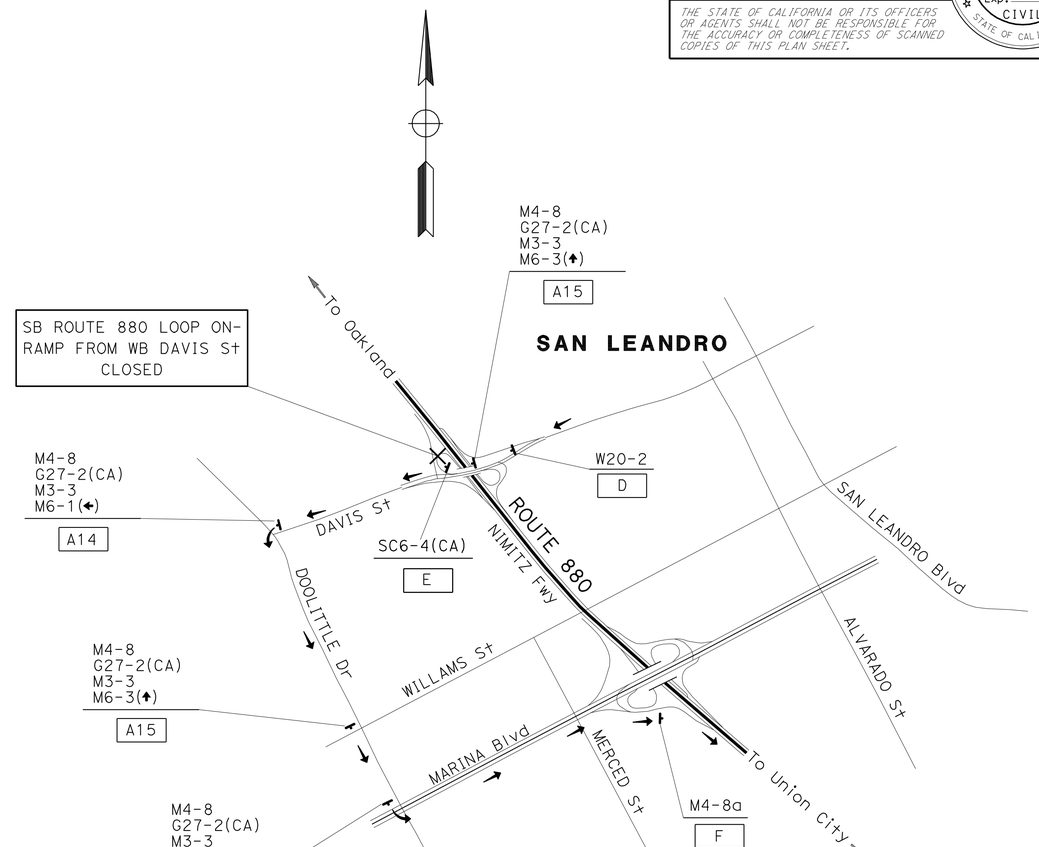

DETOUR VIA
WESTBOUND DAVIS St; SOUTHBOUND DOOLITTLE DR; EASTBOUND MARINA Blvd; ON-RAMP TO NORTHBOUND ROUTE 880.

DETOUR PLAN No. Ala 880-12
SB ROUTE 880 ON-RAMP
FROM WB DAVIS St
CLOSURE

CONSTRUCTION AREA SIGNS
NO SCALE

CS-19

REVISED BY | DATE REVISED
LEOPOLDO G. BONGATO | FLORANTE P. PEREZ
CALCULATED-DESIGNED BY | CHECKED BY
FUNCTIONAL SUPERVISOR: LOURDES DAVID
STATE OF CALIFORNIA - DEPARTMENT OF TRANSPORTATION
Caltrans
TRAFFIC

LAST REVISION 04-16-12 | DATE PLOTTED => 04-JUN-2012 | TIME PLOTTED => 16:48

Dist	COUNTY	ROUTE	POST MILES TOTAL PROJECT	SHEET No.	TOTAL SHEETS
04	Ala,CC	4,80,84, 92,238,etc.	Var	64	141

Florante P. Perez 4-11-12
REGISTERED CIVIL ENGINEER DATE

6-4-12
PLANS APPROVAL DATE

REGISTERED PROFESSIONAL ENGINEER
Florante P. Perez
No. 41030
Exp. 3-31-13
CIVIL
STATE OF CALIFORNIA

THE STATE OF CALIFORNIA OR ITS OFFICERS OR AGENTS SHALL NOT BE RESPONSIBLE FOR THE ACCURACY OR COMPLETENESS OF SCANNED COPIES OF THIS PLAN SHEET.

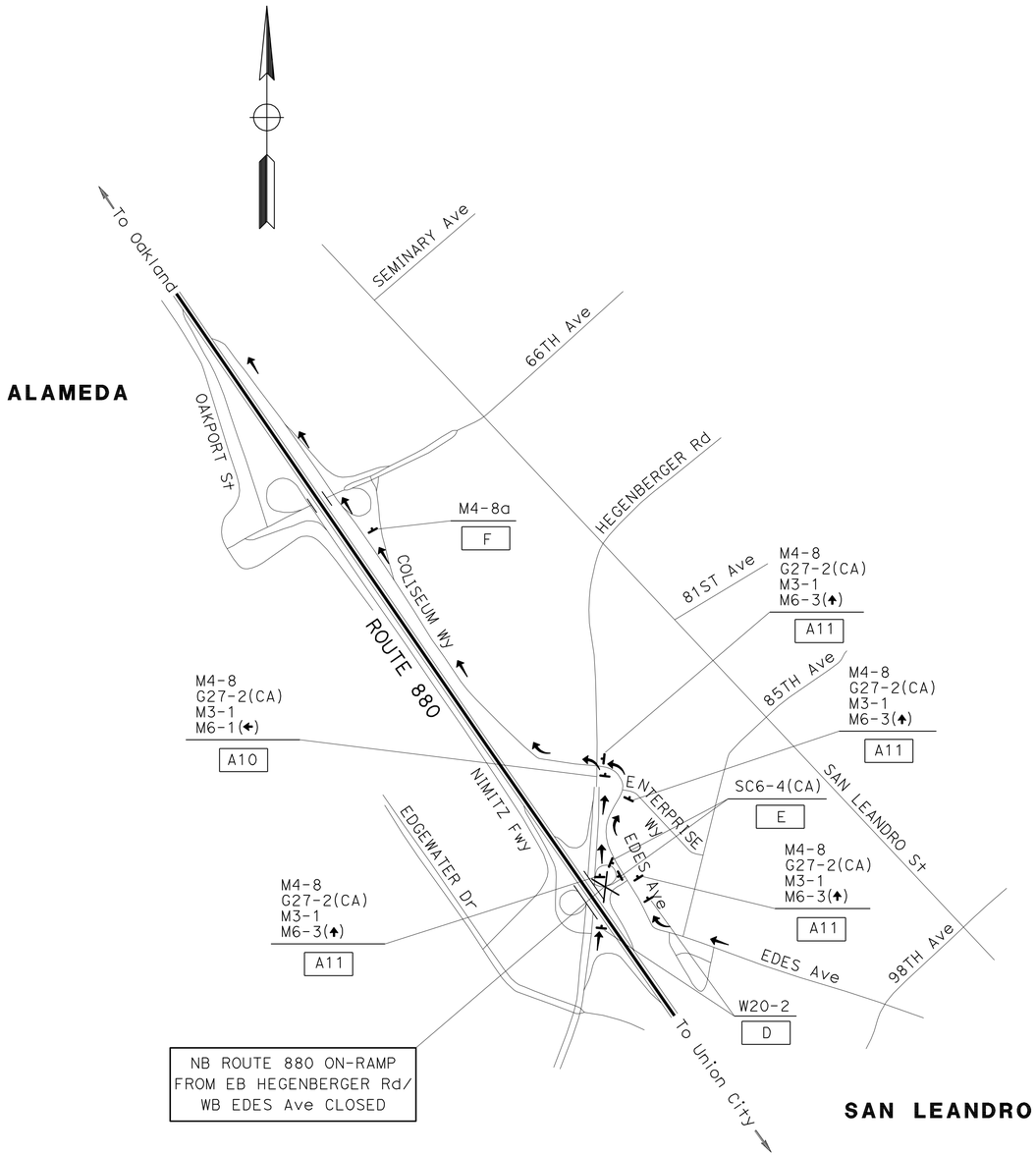

NB ROUTE 880 ON-RAMP
FROM EB HEGENBERGER Rd/
WB EDES Ave CLOSED

DETOUR VIA
TRAFFIC FROM NB HEGENBERGER Rd
NORTHBOUND HEGENBERGER Rd;
NORTHBOUND COLISEUM WAY;
ON-RAMP TO NORTHBOUND ROUTE 880.

DETOUR VIA
TRAFFIC FROM WB EDES Ave
WESTBOUND EDES Ave;
NORTHBOUND COLISEUM WAY;
ON-RAMP TO NORTHBOUND ROUTE 880.

DETOUR PLAN No. Ala 880-13
NB ROUTE 880 ON-RAMP
FROM NB HEGENBERGER Rd/WB EDES Ave
CLOSURE

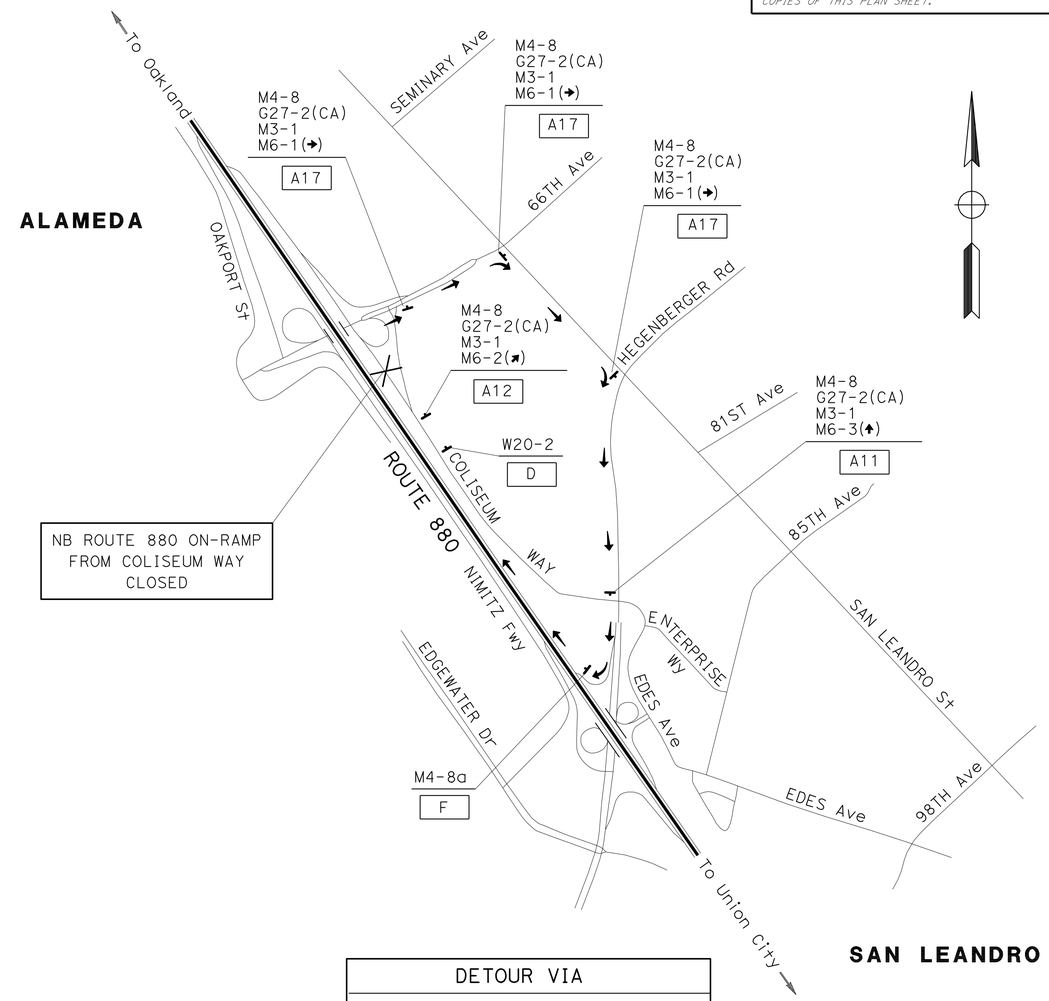

NB ROUTE 880 ON-RAMP
FROM COLISEUM WAY
CLOSED

DETOUR VIA
NORTHBOUND COLISEUM WAY;
EASTBOUND 66TH Ave;
SOUTHBOUND SAN LEANDRO St;
SOUTHBOUND HEGENBERGER Rd;
ON-RAMP TO NORTHBOUND ROUTE 880.

DETOUR PLAN No. Ala 880-14
NB ROUTE 880 ON-RAMP
FROM COLISEUM WAY
CLOSURE

CONSTRUCTION AREA SIGNS
NO SCALE

CS-20

STATE OF CALIFORNIA - DEPARTMENT OF TRANSPORTATION
Caltrans
TRAFFIC

FUNCTIONAL SUPERVISOR: LOURDES DAVID
CALCULATED-DESIGNED BY: LEOPOLDO G. BONGATO
CHECKED BY: FLORANTE P. PEREZ
REVISED BY
DATE REVISED

LAST REVISION 04-16-12
DATE PLOTTED => 04-JUN-2012
TIME PLOTTED => 16:48

Dist	COUNTY	ROUTE	POST MILES TOTAL PROJECT	SHEET No.	TOTAL SHEETS
04	Ala,CC	4,80,84, 92,238,etc.	Var	65	141

REGISTERED CIVIL ENGINEER 4-11-12 DATE

6-4-12
PLANS APPROVAL DATE

REGISTERED PROFESSIONAL ENGINEER Florante P. Perez No. 41030 Exp. 3-31-13 CIVIL STATE OF CALIFORNIA

THE STATE OF CALIFORNIA OR ITS OFFICERS OR AGENTS SHALL NOT BE RESPONSIBLE FOR THE ACCURACY OR COMPLETENESS OF SCANNED COPIES OF THIS PLAN SHEET.

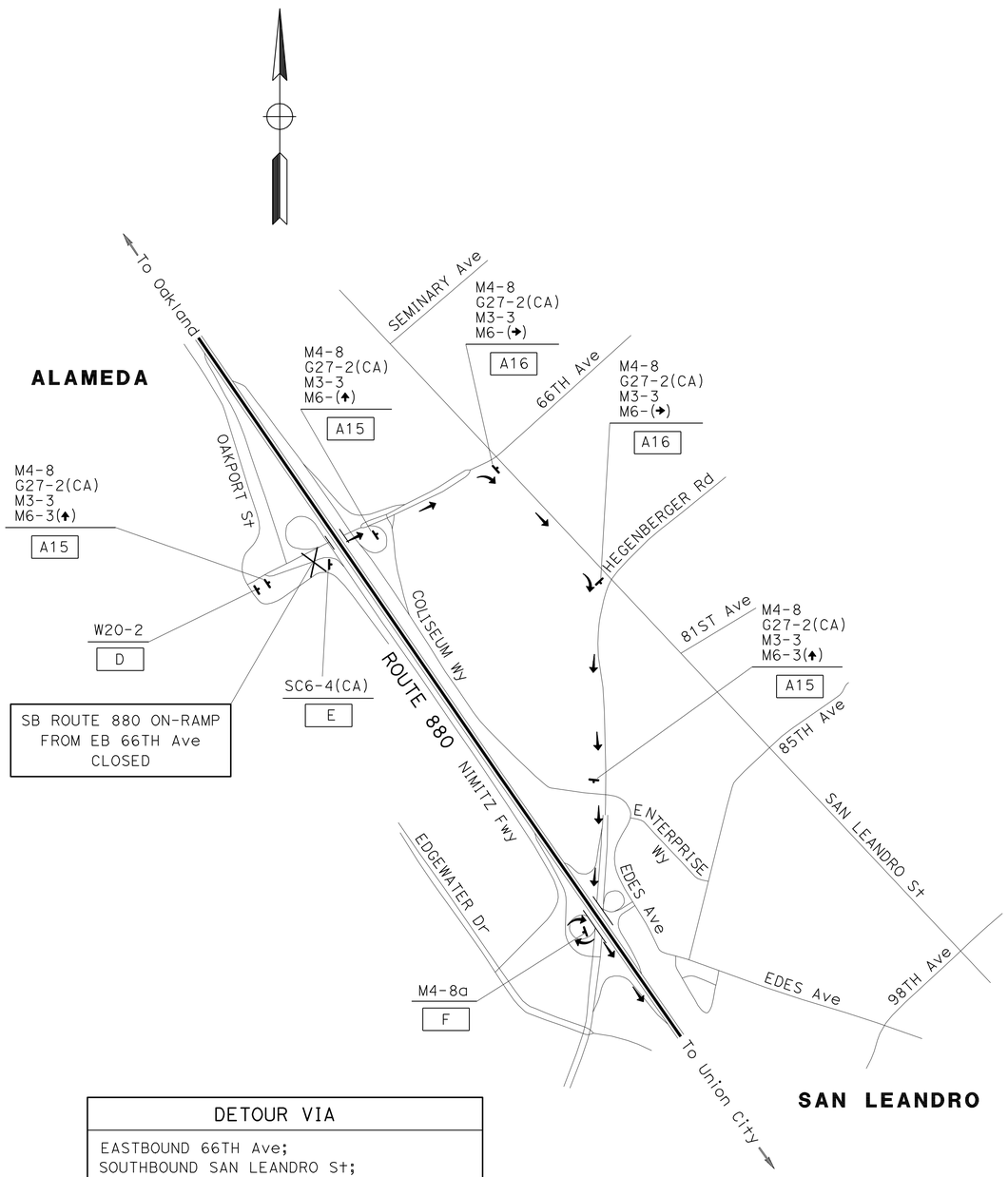

DETOUR VIA
EASTBOUND 66TH Ave;
SOUTHBOUND SAN LEANDRO St;
SOUTHBOUND HEGENBERGER Rd;
LOOP ON-RAMP TO SOUTHBOUND ROUTE 880.

DETOUR PLAN No. Ala 880-15
SB ROUTE 880 ON-RAMP
FROM EB 66th Ave;
CLOSURE

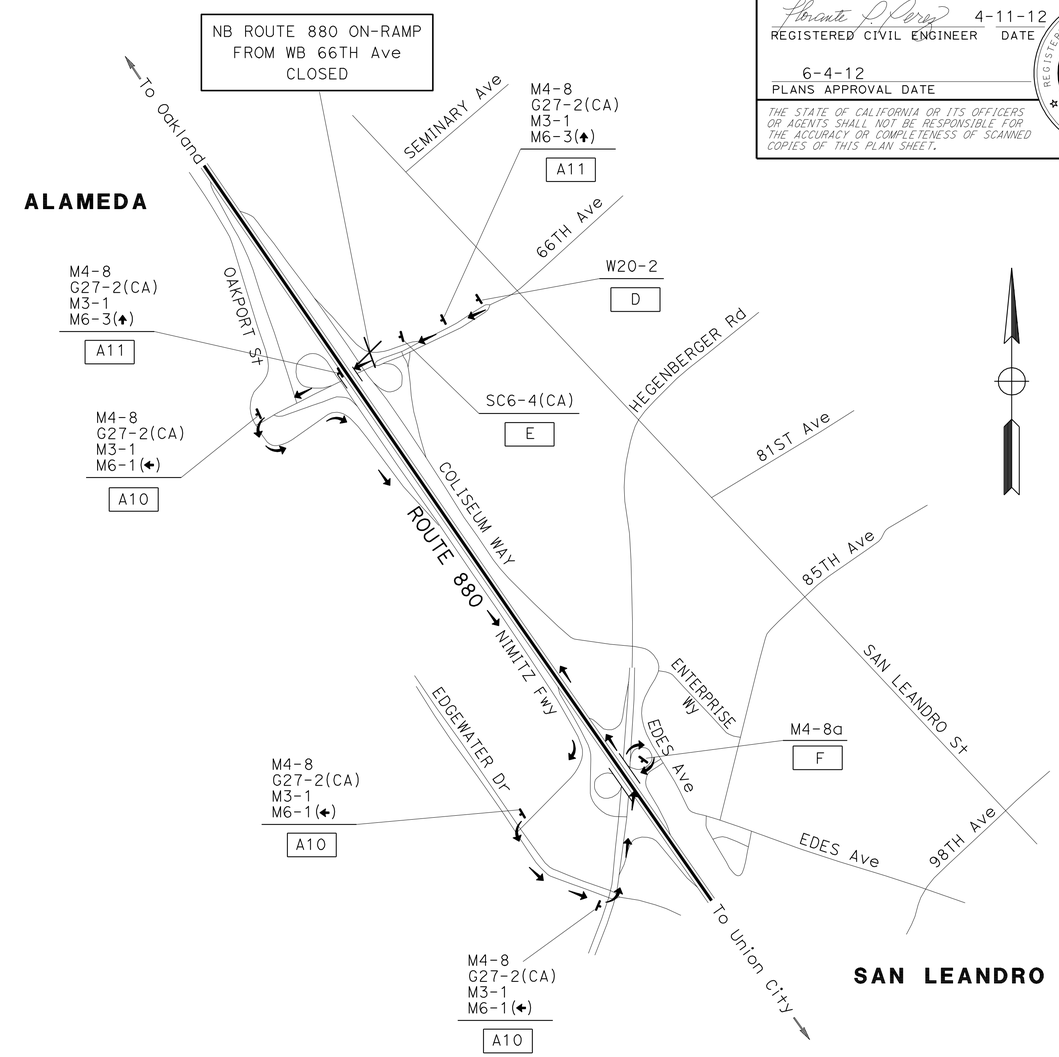

DETOUR VIA
WESTBOUND 66TH Ave;
SOUTHBOUND OAKPORT St;
SOUTHBOUND EDGEWATER Dr;
NORTHBOUND HEGENBERGER Rd;
LOOP ON-RAMP TO NORTHBOUND ROUTE 880.

DETOUR PLAN No. Ala 880-16
NB ROUTE 880 ON-RAMP
FROM WB 66th Ave
CLOSURE

CONSTRUCTION AREA SIGNS

NO SCALE

CS-21

STATE OF CALIFORNIA - DEPARTMENT OF TRANSPORTATION
Caltrans
TRAFFIC

FUNCTIONAL SUPERVISOR: LOURDES DAVID
CALCULATED-DESIGNED BY: LEOPOLDO G. BONGATO
CHECKED BY: FLORANTE P. PEREZ
REVISED BY
DATE REVISED

LAST REVISION 04-16-12
DATE PLOTTED => 04-JUN-2012
TIME PLOTTED => 16:48

Dist	COUNTY	ROUTE	POST MILES TOTAL PROJECT	SHEET No.	TOTAL SHEETS
04	Ala,CC	4,80,84, 92,238,*etc.*	Var	66	141

REGISTERED CIVIL ENGINEER 4-11-12 DATE

6-4-12
PLANS APPROVAL DATE

REGISTERED PROFESSIONAL ENGINEER
Florante P. Perez
No. 41030
Exp. 3-31-13
CIVIL
STATE OF CALIFORNIA

THE STATE OF CALIFORNIA OR ITS OFFICERS OR AGENTS SHALL NOT BE RESPONSIBLE FOR THE ACCURACY OR COMPLETENESS OF SCANNED COPIES OF THIS PLAN SHEET.

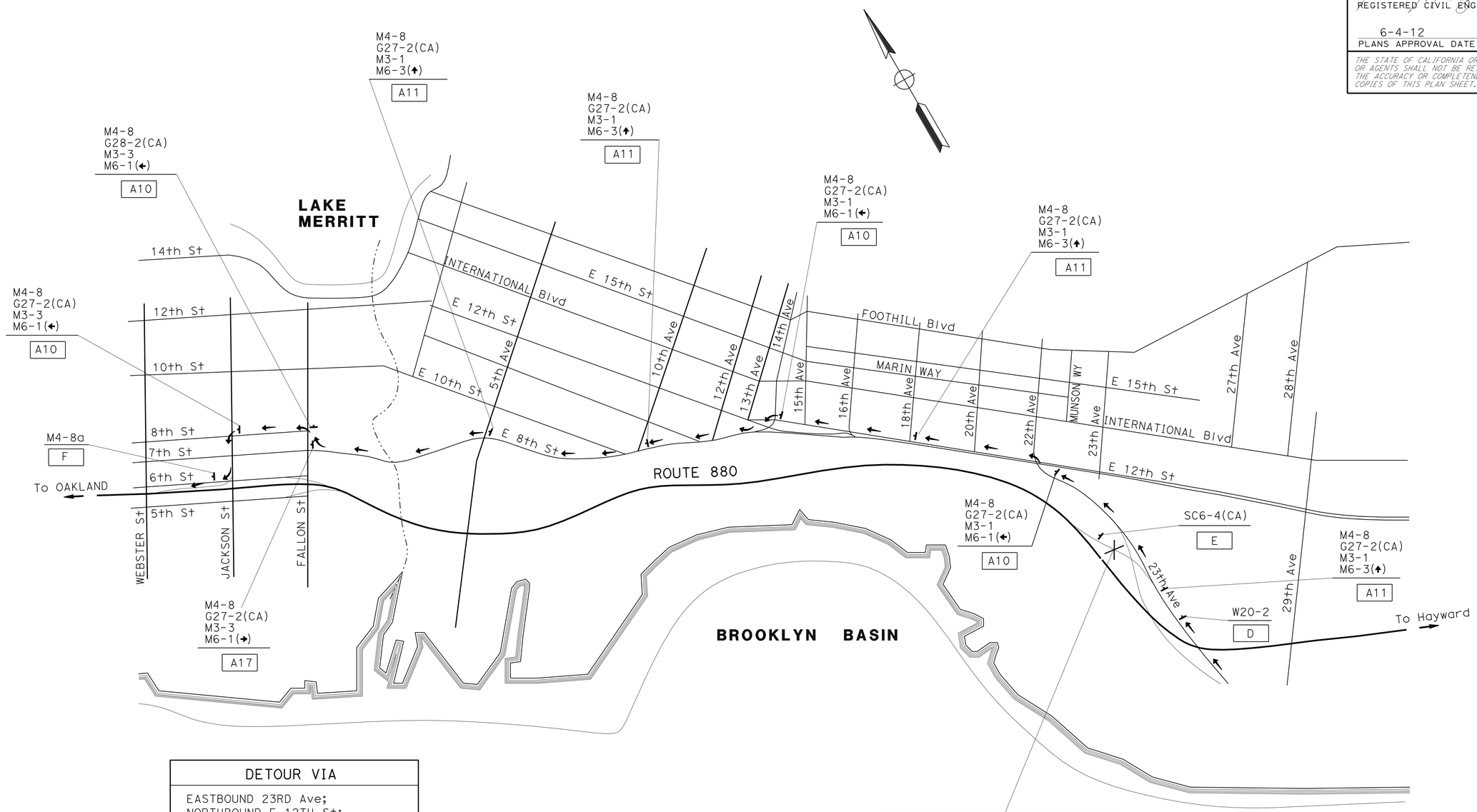

DETOUR VIA
EASTBOUND 23RD Ave;
NORTHBOUND E 12TH St;
WESTBOUND 14TH Ave;
NORTHBOUND E 8TH St;
NORTHBOUND 7TH St;
EASTBOUND FALLON St;
NORTHBOUND 8TH St;
WESTBOUND JACKSON St;
NORTHBOUND ROUTE 880 ON-RAMP.

NB ROUTE 880 ON FROM
EB 23rd Ave DIAGONAL
CLOSED

DETOUR PLAN No. Ala 880-17
NB ROUTE 880 ON FROM
EB 23rd Ave DIAGONAL CLOSURE

FOR NOTES, ABBREVIATIONS AND LEGEND, SEE SHEET S-1

CONSTRUCTION AREA SIGNS
NO SCALE

CS-22

STATE OF CALIFORNIA - DEPARTMENT OF TRANSPORTATION
Caltrans
TRAFFIC

FUNCTIONAL SUPERVISOR: LOURDES DAVID
CALCULATED-DESIGNED BY: LEOPOLDO G. BONGATO/ CLAUDIA FANG
CHECKED BY: FLORANTE P. PEREZ
REVISED BY
DATE REVISED

LAST REVISION DATE PLOTTED => 04-JUN-2012
04-16-12 TIME PLOTTED => 16:48

Dist	COUNTY	ROUTE	POST MILES TOTAL PROJECT	SHEET No.	TOTAL SHEETS
04	Ala,CC	4,80,84, 92,238,etc.	Var	67	141

REGISTERED CIVIL ENGINEER 4-11-12 DATE

6-4-12
PLANS APPROVAL DATE

REGISTERED PROFESSIONAL ENGINEER Florante P. Perez No. 41030 Exp. 3-31-13 CIVIL STATE OF CALIFORNIA

THE STATE OF CALIFORNIA OR ITS OFFICERS OR AGENTS SHALL NOT BE RESPONSIBLE FOR THE ACCURACY OR COMPLETENESS OF SCANNED COPIES OF THIS PLAN SHEET.

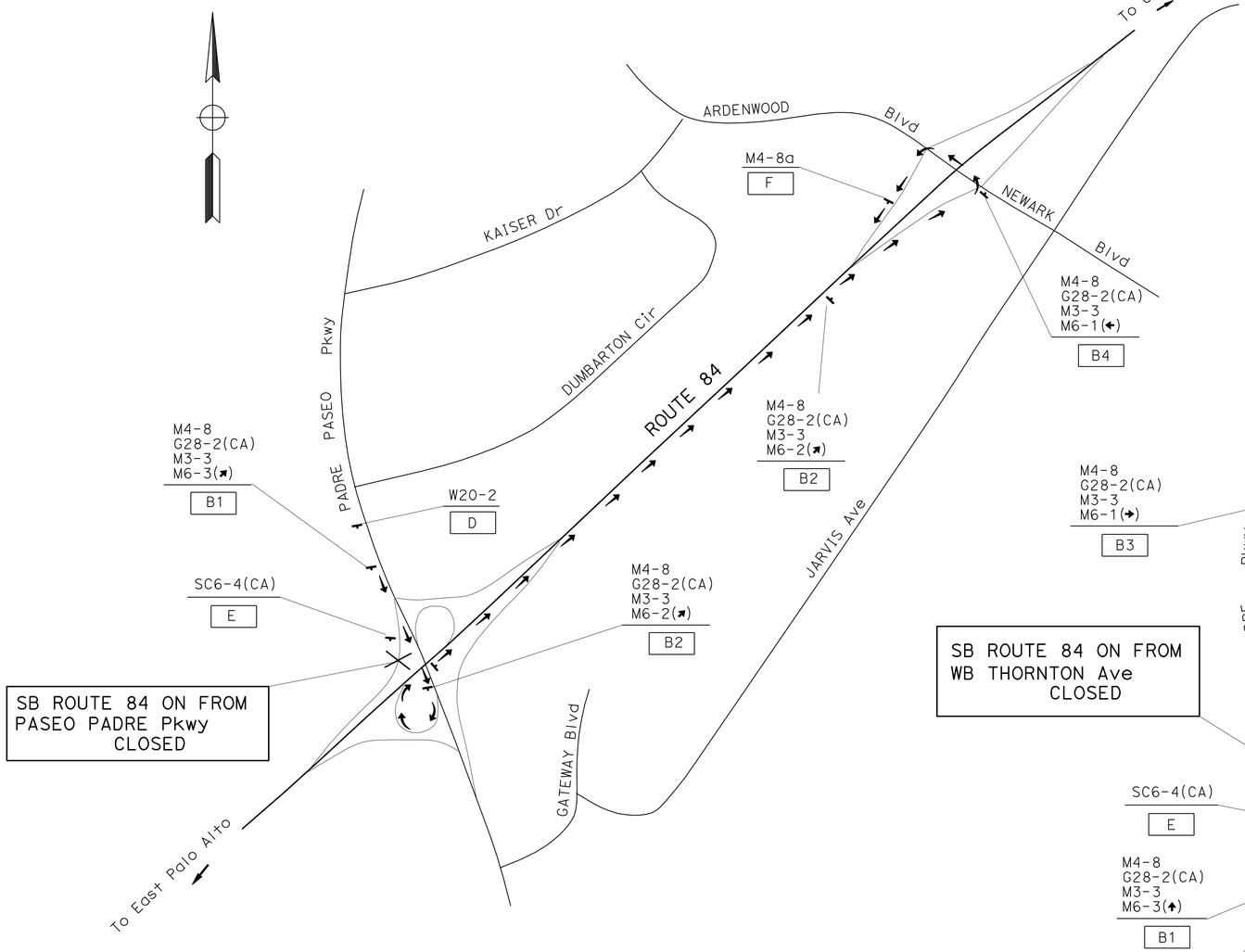

DETOUR VIA
PASEO PADRE Pkwy; ON-RAMP TO NORTHBOUND ROUTE 84; OFF-RAMP TO NEWARK Blvd; ON-RAMP TO SOUTHBOUND ROUTE 84.

DETOUR PLAN No. Ala 84-1
SB ROUTE 84 ON-RAMP FROM
PASEO PADRE Pkwy CLOSURE

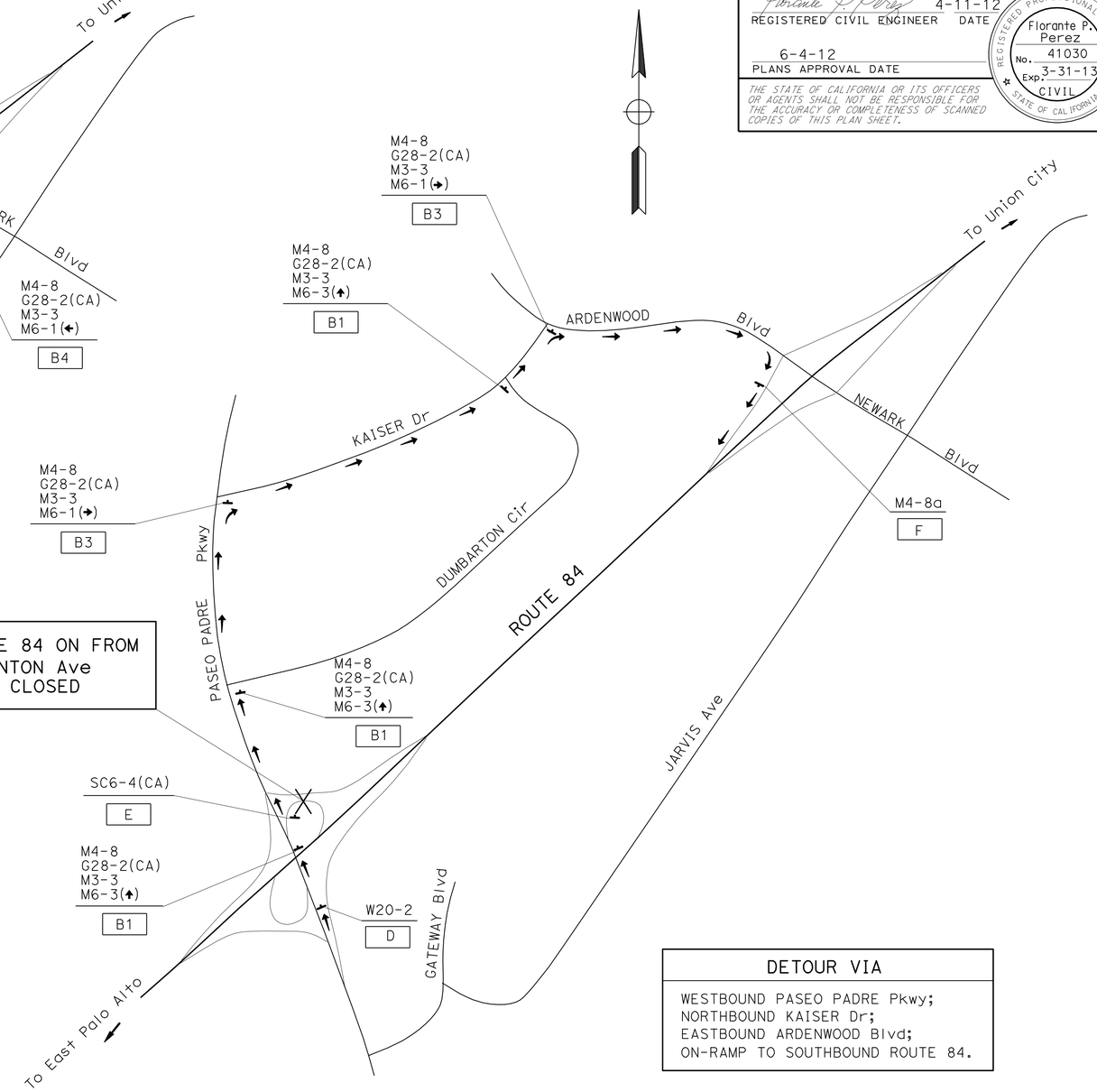

DETOUR VIA
WESTBOUND PASEO PADRE Pkwy; NORTHBOUND KAISER Dr; EASTBOUND ARDENWOOD Blvd; ON-RAMP TO SOUTHBOUND ROUTE 84.

DETOUR PLAN No. Ala 84-2
SB ROUTE 84 ON-RAMP FROM
WB THORNTON Ave CLOSURE

CONSTRUCTION AREA SIGNS

NO SCALE

CS-23

STATE OF CALIFORNIA - DEPARTMENT OF TRANSPORTATION
Caltrans
TRAFFIC

FUNCTIONAL SUPERVISOR: LOURDES DAVID
CALCULATED-DESIGNED BY: LEOPOLDO G. BONGATO
CHECKED BY: FLORANTE P. PEREZ
REVISED BY
DATE REVISED

LAST REVISION 04-16-12 | DATE PLOTTED => 04-JUN-2012 | TIME PLOTTED => 16:48

Dist	COUNTY	ROUTE	POST MILES TOTAL PROJECT	SHEET No.	TOTAL SHEETS
04	Ala,CC	4,80,84, 92,238,*etc.*	Var	68	141

REGISTERED CIVIL ENGINEER 4-11-12 DATE

6-4-12
PLANS APPROVAL DATE

REGISTERED PROFESSIONAL ENGINEER Florante P. Perez No. 41030 Exp. 3-31-13 CIVIL STATE OF CALIFORNIA

THE STATE OF CALIFORNIA OR ITS OFFICERS OR AGENTS SHALL NOT BE RESPONSIBLE FOR THE ACCURACY OR COMPLETENESS OF SCANNED COPIES OF THIS PLAN SHEET.

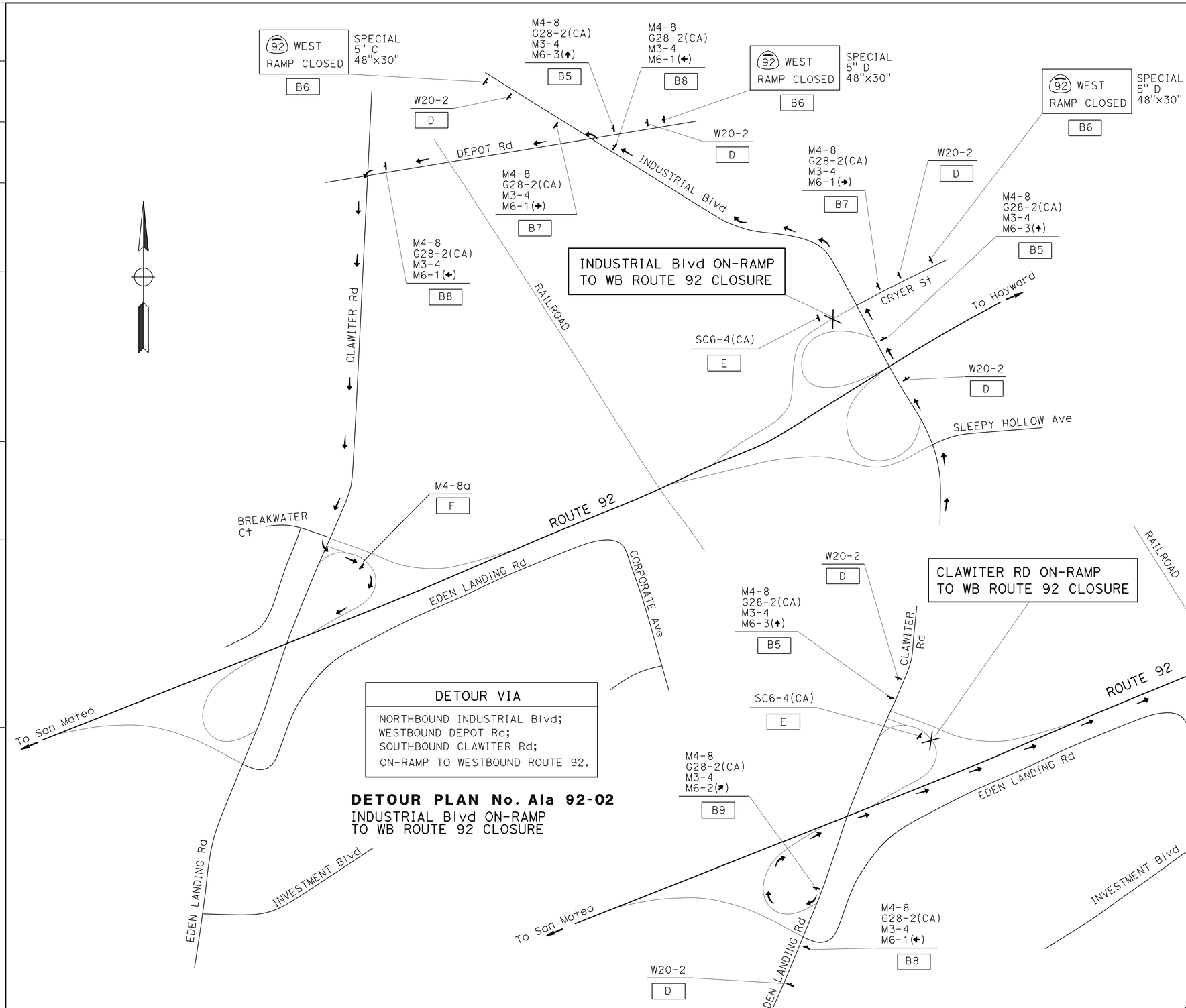

DETOUR PLAN No. Ala 92-02
INDUSTRIAL Blvd ON-RAMP
TO WB ROUTE 92 CLOSURE

DETOUR PLAN No. Ala 92-01
CLAWITER Rd ON-RAMP
TO WB ROUTE 92 CLOSURE

FOR NOTES, ABBREVIATIONS AND LEGEND, SEE SHEET S-1

CONSTRUCTION AREA SIGNS

NO SCALE

CS-24

STATE OF CALIFORNIA - DEPARTMENT OF TRANSPORTATION
TRAFFIC

FUNCTIONAL SUPERVISOR: LOURDES DAVID
CALCULATED-DESIGNED BY: LEOPOLDO G. BONGATO/ CLAUDIA FANG
CHECKED BY: FLORANTE P. PEREZ
REVISED BY
DATE REVISED

LAST REVISION 04-16-12
DATE PLOTTED => 04-JUN-2012
TIME PLOTTED => 16:49

Dist	COUNTY	ROUTE	POST MILES TOTAL PROJECT	SHEET No.	TOTAL SHEETS
04	Ala,CC	4,80,84, 92,238,*etc.*	Var	69	141

REGISTERED CIVIL ENGINEER 4-11-12 DATE

6-4-12
PLANS APPROVAL DATE

REGISTERED PROFESSIONAL ENGINEER
Florante P. Perez
No. 41030
Exp. 3-31-13
CIVIL
STATE OF CALIFORNIA

THE STATE OF CALIFORNIA OR ITS OFFICERS OR AGENTS SHALL NOT BE RESPONSIBLE FOR THE ACCURACY OR COMPLETENESS OF SCANNED COPIES OF THIS PLAN SHEET.

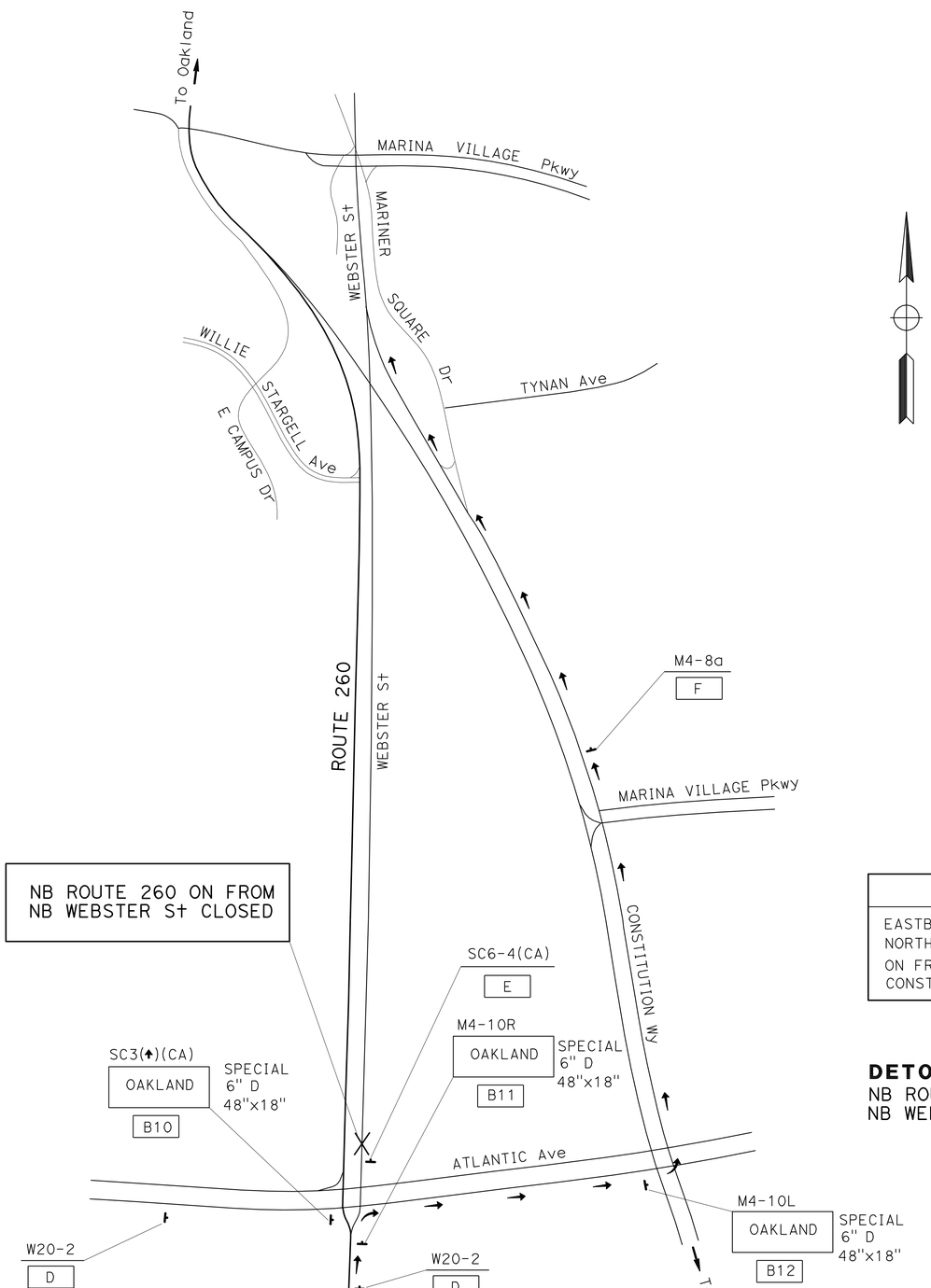

NB ROUTE 260 ON FROM
NB WEBSTER St CLOSED

DETOUR VIA
EASTBOUND ATLANTIC Ave; NORTHBOUND CONSTITUTION WAY; ON FROM NORTHBOUND CONSTITUTION WAY.

DETOUR PLAN No. Ala 260-01
NB ROUTE 260 ON FROM
NB WEBSTER St CLOSURE

FOR NOTES, ABBREVIATIONS AND LEGEND, SEE SHEET S-1

CONSTRUCTION AREA SIGNS

NO SCALE

CS-25

STATE OF CALIFORNIA - DEPARTMENT OF TRANSPORTATION
Caltrans®
TRAFFIC

FUNCTIONAL SUPERVISOR: LOURDES DAVID
CALCULATED-DESIGNED BY: LEOPOLDO G. BONGATO/ CLAUDIA FANG
CHECKED BY: FLORANTE P. PEREZ
REVISED BY
DATE REVISED

LAST REVISION 04-16-12
DATE PLOTTED => 04-JUN-2012
TIME PLOTTED => 16:49

Dist	COUNTY	ROUTE	POST MILES TOTAL PROJECT	SHEET No.	TOTAL SHEETS
04	Ala,CC	4,80,84, 92,238,*etc.*	Var	70	141

REGISTERED CIVIL ENGINEER — DATE: 4-11-12

PLANS APPROVAL DATE: 6-4-12

REGISTERED PROFESSIONAL ENGINEER — Florante P. Perez — No. 41030 — Exp. 3-31-13 — CIVIL — STATE OF CALIFORNIA

THE STATE OF CALIFORNIA OR ITS OFFICERS OR AGENTS SHALL NOT BE RESPONSIBLE FOR THE ACCURACY OR COMPLETENESS OF SCANNED COPIES OF THIS PLAN SHEET.

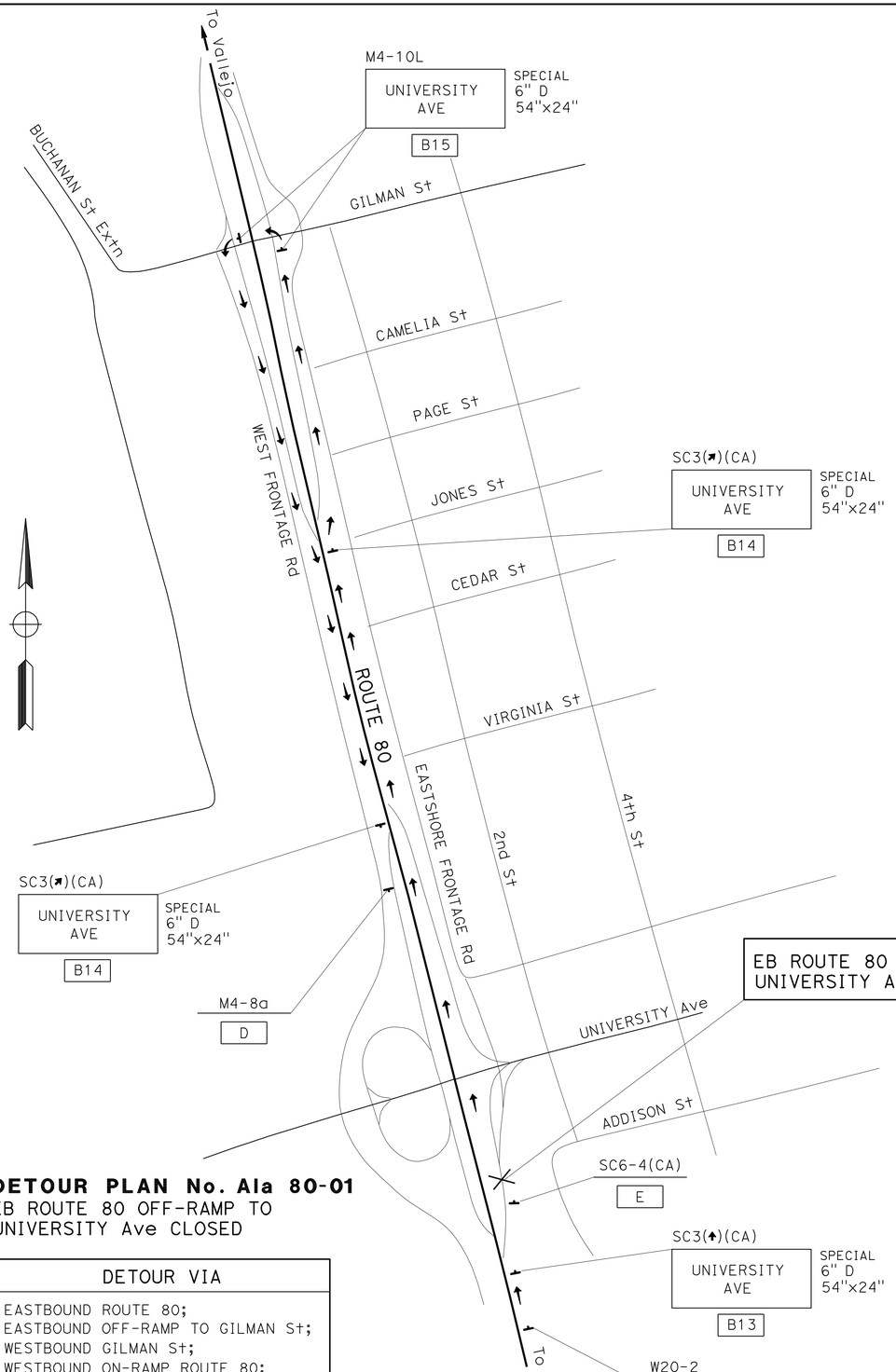

DETOUR PLAN No. Ala 80-01
EB ROUTE 80 OFF-RAMP TO UNIVERSITY Ave CLOSED

DETOUR VIA
EASTBOUND ROUTE 80;
EASTBOUND OFF-RAMP TO GILMAN St;
WESTBOUND GILMAN St;
WESTBOUND ON-RAMP ROUTE 80;
WESTBOUND ROUTE 80.

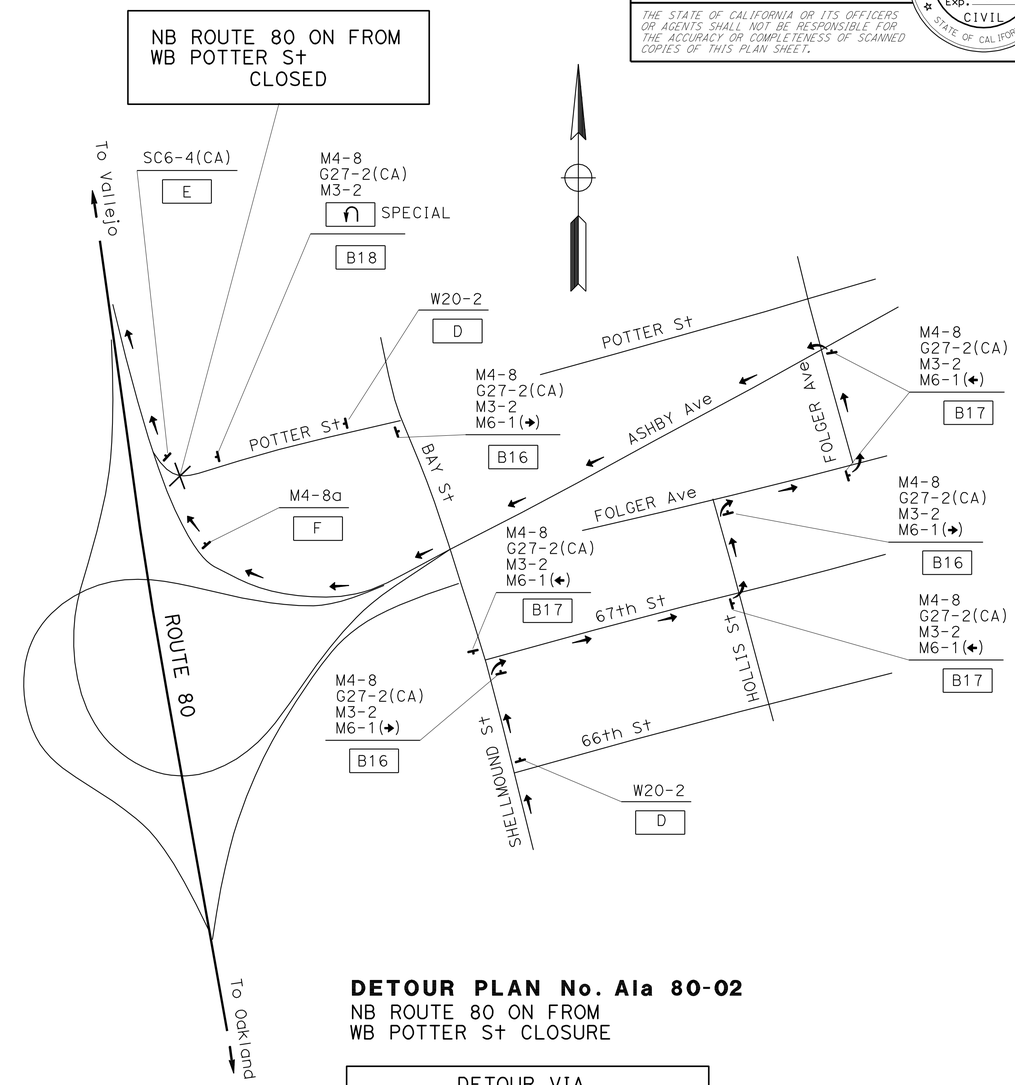

DETOUR PLAN No. Ala 80-02
NB ROUTE 80 ON FROM WB POTTER St CLOSURE

DETOUR VIA
NORTHBOUND SHELLMOUND St;
EASTBOUND 67TH St;
NORTHBOUND HOLLIS St;
EASTBOUND FOLGER St;
NORTHBOUND 7TH St;
WESTBOUND ASHBY St;
ON-RAMP TO NORTHBOUND ROUTE 80.

CONSTRUCTION AREA SIGNS

NO SCALE

CS-26

STATE OF CALIFORNIA - DEPARTMENT OF TRANSPORTATION — Caltrans — TRAFFIC

FUNCTIONAL SUPERVISOR: LOURDES DAVID

CALCULATED-DESIGNED BY: LEOPOLDO G. BONGATO/ CLAUDIA FANG — CHECKED BY: FLORANTE P. PEREZ

REVISED BY — DATE REVISED

LAST REVISION 04-16-12 — DATE PLOTTED => 04-JUN-2012 — TIME PLOTTED => 16:49

Dist	COUNTY	ROUTE	POST MILES TOTAL PROJECT	SHEET No.	TOTAL SHEETS
04	Ala,CC	4,80,84, 92,238,etc.	Var	71	141

REGISTERED CIVIL ENGINEER 4-11-12 DATE

6-4-12
PLANS APPROVAL DATE

REGISTERED PROFESSIONAL ENGINEER
Florante P. Perez
No. 41030
Exp. 3-31-13
CIVIL
STATE OF CALIFORNIA

THE STATE OF CALIFORNIA OR ITS OFFICERS OR AGENTS SHALL NOT BE RESPONSIBLE FOR THE ACCURACY OR COMPLETENESS OF SCANNED COPIES OF THIS PLAN SHEET.

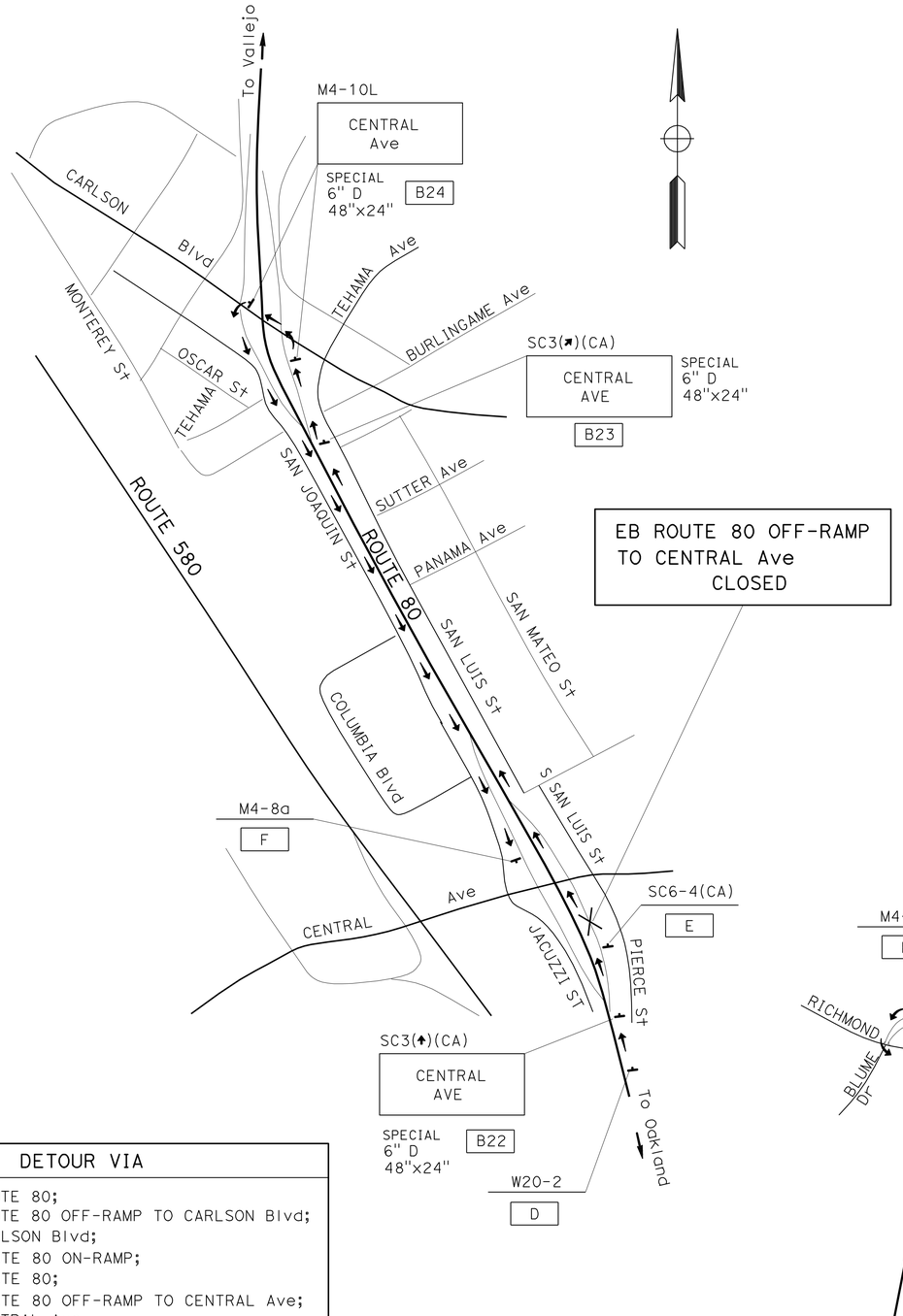

DETOUR VIA
EASTBOUND ROUTE 80;
EASTBOUND ROUTE 80 OFF-RAMP TO CARLSON Blvd;
WESTBOUND CARLSON Blvd;
WESTBOUND ROUTE 80 ON-RAMP;
WESTBOUND ROUTE 80;
WESTBOUND ROUTE 80 OFF-RAMP TO CENTRAL Ave;
EASTBOUND CENTRAL Ave.

DETOUR PLAN No. CC 80-01
EB ROUTE 80 OFF-RAMP
TO CENTRAL Ave CLOSURE

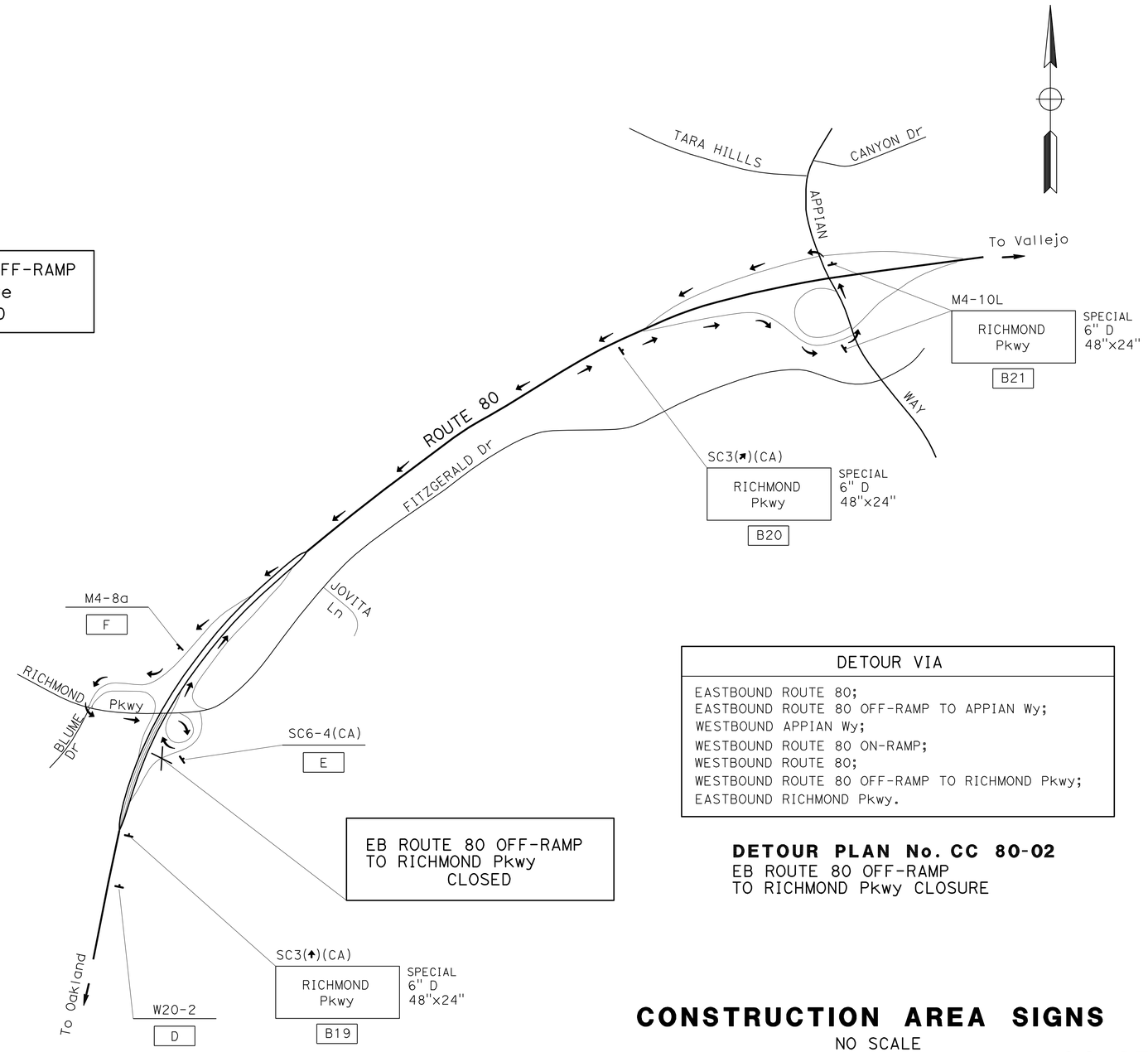

DETOUR VIA
EASTBOUND ROUTE 80;
EASTBOUND ROUTE 80 OFF-RAMP TO APPIAN Wy;
WESTBOUND APPIAN Wy;
WESTBOUND ROUTE 80 ON-RAMP;
WESTBOUND ROUTE 80;
WESTBOUND ROUTE 80 OFF-RAMP TO RICHMOND Pkwy;
EASTBOUND RICHMOND Pkwy.

DETOUR PLAN No. CC 80-02
EB ROUTE 80 OFF-RAMP
TO RICHMOND Pkwy CLOSURE

CONSTRUCTION AREA SIGNS
NO SCALE

CS-27

REVISED BY	DATE REVISED

CALCULATED-DESIGNED BY: LEOPOLDO G. BONGATO/ CLAUDIA FANG
CHECKED BY: FLORANTE P. PEREZ
FUNCTIONAL SUPERVISOR: LOURDES DAVID

STATE OF CALIFORNIA - DEPARTMENT OF TRANSPORTATION
Caltrans
TRAFFIC

LAST REVISION 04-16-12 | DATE PLOTTED => 04-JUN-2012 | TIME PLOTTED => 16:49

Dist	COUNTY	ROUTE	POST MILES TOTAL PROJECT	SHEET No.	TOTAL SHEETS
04	Ala,CC	4,80,84, 92,238,etc.	Var	72	141

REGISTERED CIVIL ENGINEER 4-11-12 DATE

6-4-12
PLANS APPROVAL DATE

REGISTERED PROFESSIONAL ENGINEER Florante P. Perez No. 41030 Exp. 3-31-13 CIVIL STATE OF CALIFORNIA

THE STATE OF CALIFORNIA OR ITS OFFICERS OR AGENTS SHALL NOT BE RESPONSIBLE FOR THE ACCURACY OR COMPLETENESS OF SCANNED COPIES OF THIS PLAN SHEET.

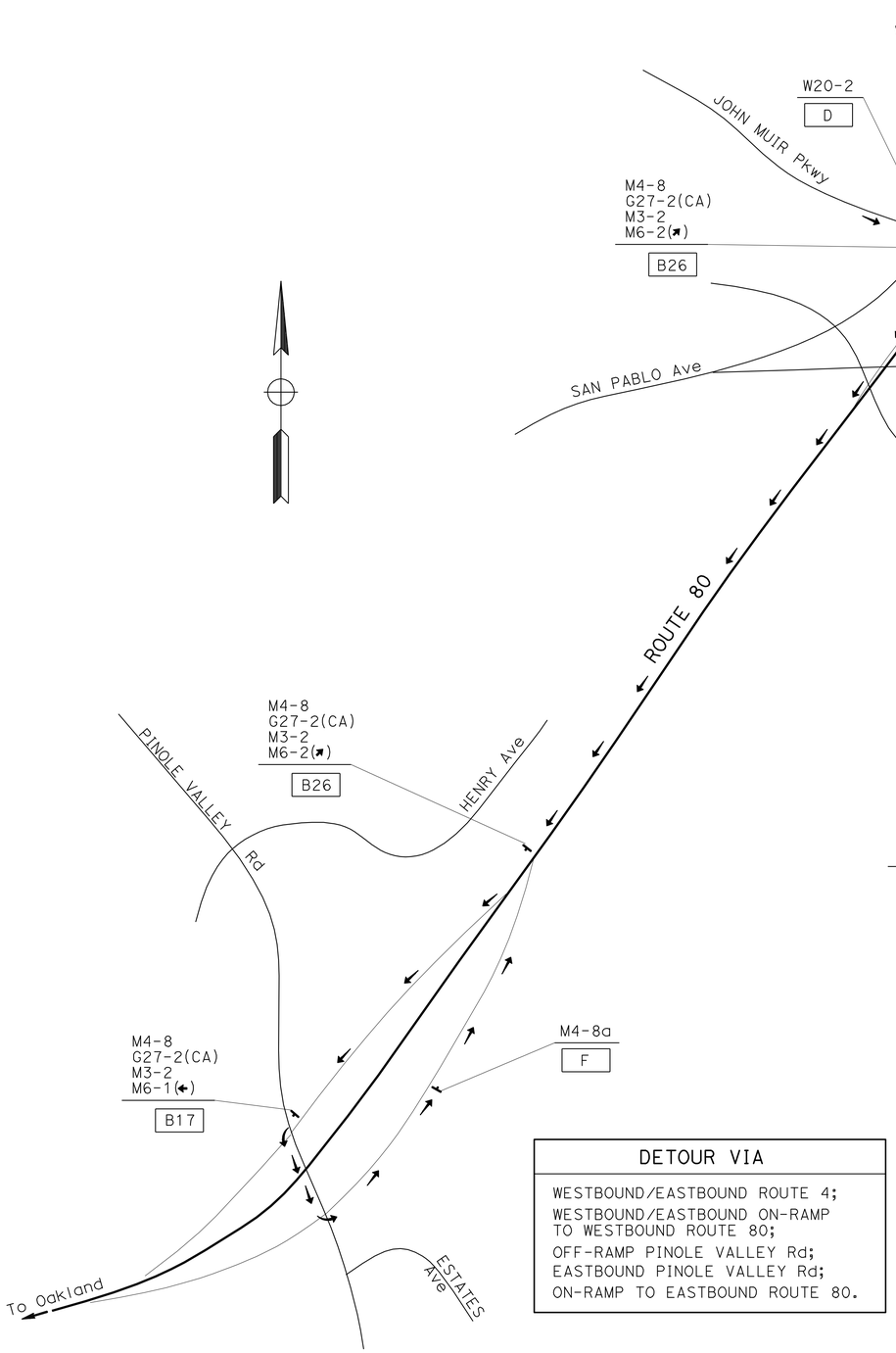

DETOUR VIA

WESTBOUND/EASTBOUND ROUTE 4;
WESTBOUND/EASTBOUND ON-RAMP TO WESTBOUND ROUTE 80;
OFF-RAMP PINOLE VALLEY Rd;
EASTBOUND PINOLE VALLEY Rd;
ON-RAMP TO EASTBOUND ROUTE 80.

DETOUR PLAN No. CC 80-03
EB ROUTE 80 ON-RAMP FROM
WB/EB ROUTE 4 CLOSURE

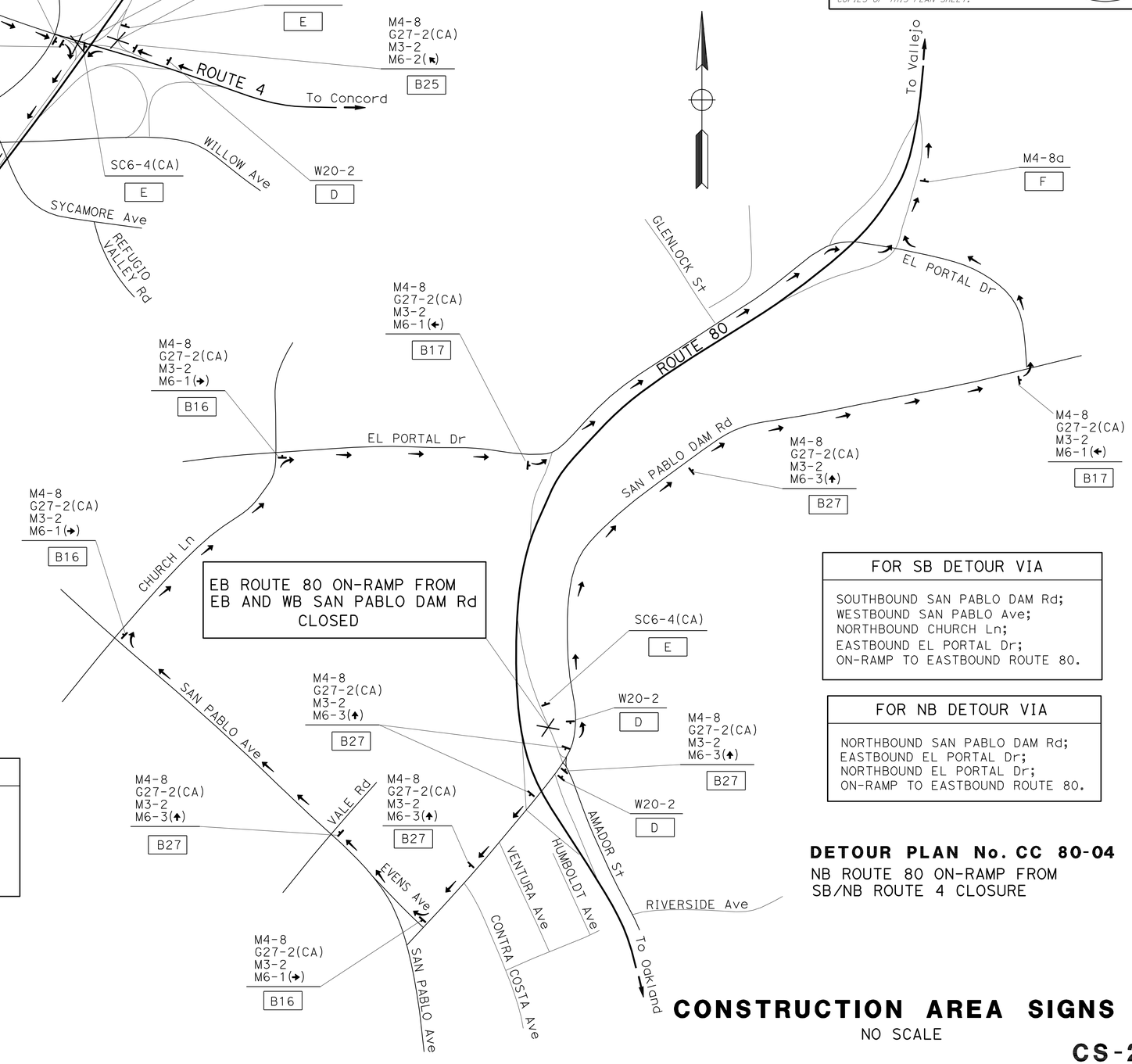

FOR SB DETOUR VIA

SOUTHBOUND SAN PABLO DAM Rd;
WESTBOUND SAN PABLO Ave;
NORTHBOUND CHURCH Ln;
EASTBOUND EL PORTAL Dr;
ON-RAMP TO EASTBOUND ROUTE 80.

FOR NB DETOUR VIA

NORTHBOUND SAN PABLO DAM Rd;
EASTBOUND EL PORTAL Dr;
NORTHBOUND EL PORTAL Dr;
ON-RAMP TO EASTBOUND ROUTE 80.

DETOUR PLAN No. CC 80-04
NB ROUTE 80 ON-RAMP FROM
SB/NB ROUTE 4 CLOSURE

CONSTRUCTION AREA SIGNS

NO SCALE

CS-28

STATE OF CALIFORNIA - DEPARTMENT OF TRANSPORTATION
Caltrans
TRAFFIC

FUNCTIONAL SUPERVISOR: LOURDES DAVID
CALCULATED-DESIGNED BY: LEOPOLDO G. BONGATO/ CLAUDIA FANG
CHECKED BY: FLORANTE P. PEREZ
REVISED BY
DATE REVISED

LAST REVISION | DATE PLOTTED => 04-JUN-2012 | TIME PLOTTED => 16:49
04-16-12

Dist	COUNTY	ROUTE	POST MILES TOTAL PROJECT	SHEET No.	TOTAL SHEETS
04	Ala,CC	4,80,84, 92,238,etc.	Var	73	141

REGISTERED CIVIL ENGINEER 4-11-12 DATE

6-4-12
PLANS APPROVAL DATE

REGISTERED PROFESSIONAL ENGINEER Florante P. Perez No. 41030 Exp. 3-31-13 CIVIL STATE OF CALIFORNIA

THE STATE OF CALIFORNIA OR ITS OFFICERS OR AGENTS SHALL NOT BE RESPONSIBLE FOR THE ACCURACY OR COMPLETENESS OF SCANNED COPIES OF THIS PLAN SHEET.

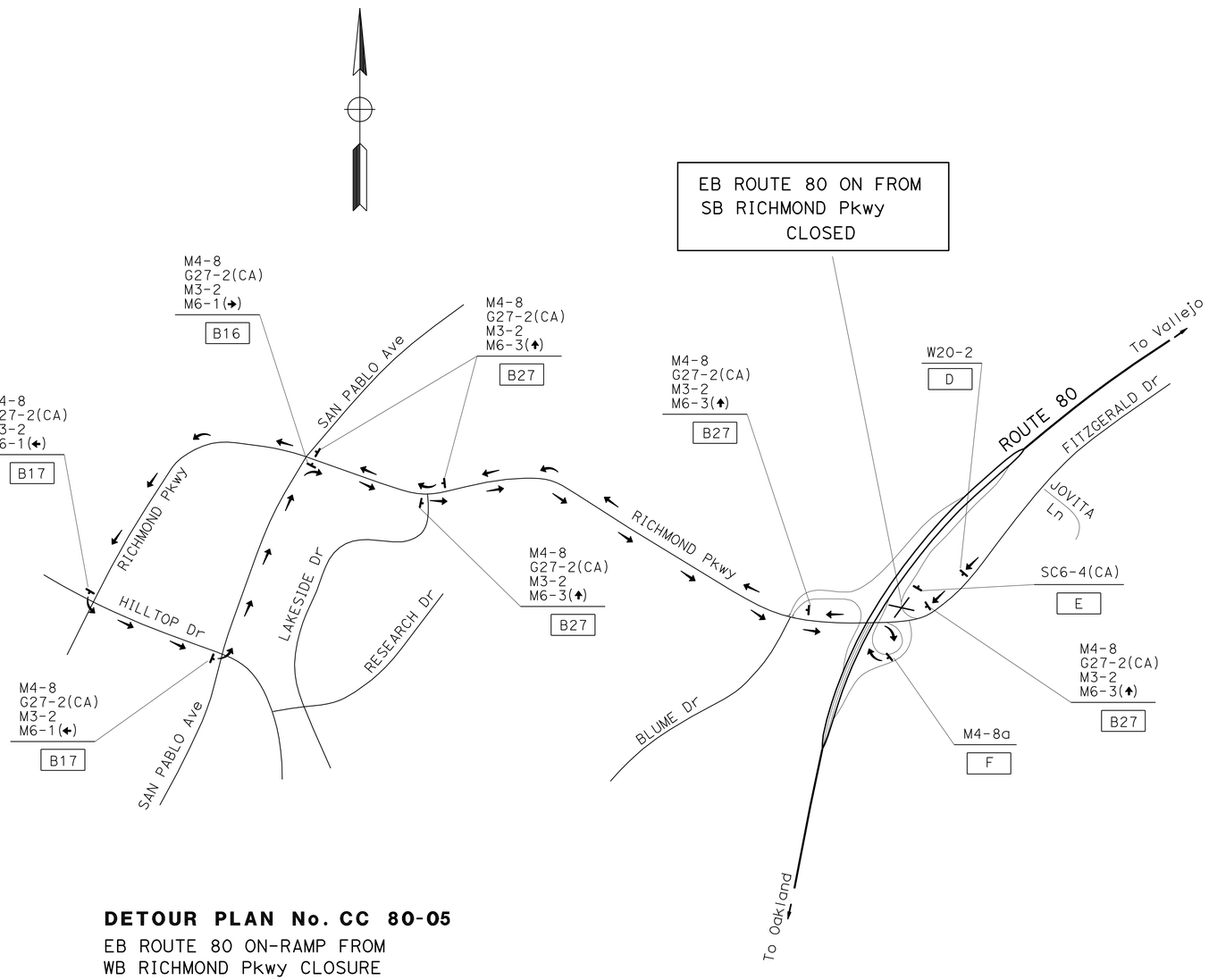

DETOUR PLAN No. CC 80-05
EB ROUTE 80 ON-RAMP FROM
WB RICHMOND Pkwy CLOSURE

DETOUR VIA
SOUTHBOUND RICHMOND Pkwy;
LEFT TURN TO HILLTOP Dr;
LEFT TURN TO SAN PABLO Ave;
RIGHT TURN TO RICHMOND Pkwy;
ON-RAMP TO EASTBOUND ROUTE 80.

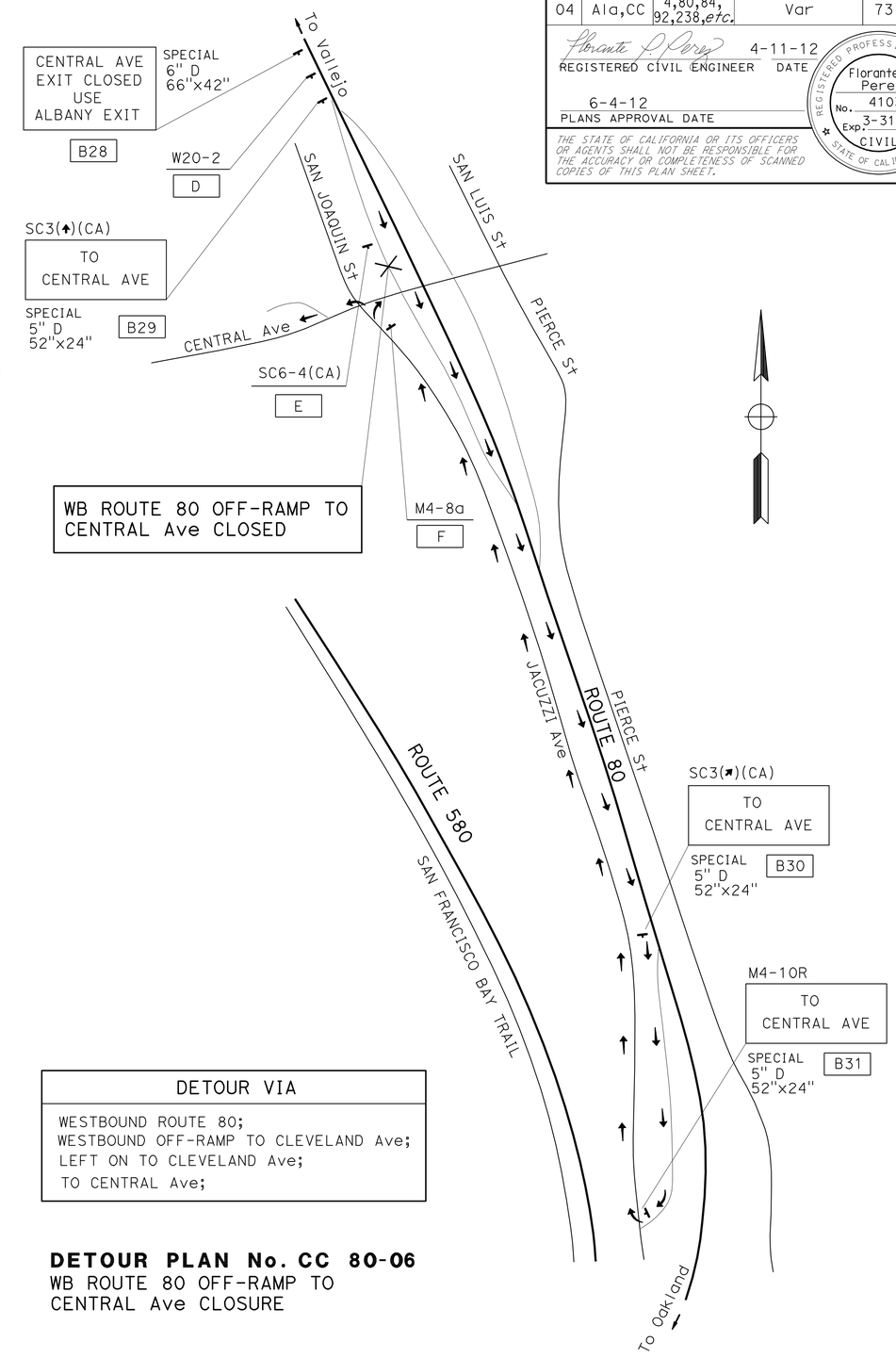

WB ROUTE 80 OFF-RAMP TO
CENTRAL Ave CLOSED

DETOUR VIA
WESTBOUND ROUTE 80;
WESTBOUND OFF-RAMP TO CLEVELAND Ave;
LEFT ON TO CLEVELAND Ave;
TO CENTRAL Ave;

DETOUR PLAN No. CC 80-06
WB ROUTE 80 OFF-RAMP TO
CENTRAL Ave CLOSURE

CONSTRUCTION AREA SIGNS
NO SCALE

CS-29

REVISED BY | DATE REVISED
LEOPOLDO G. BONGATO/ CLAUDIA FANG | FLORANTE P. PEREZ
CALCULATED-DESIGNED BY | CHECKED BY
FUNCTIONAL SUPERVISOR | LOURDES DAVID
STATE OF CALIFORNIA - DEPARTMENT OF TRANSPORTATION
Caltrans
TRAFFIC

LAST REVISION 04-16-12 | DATE PLOTTED => 04-JUN-2012 TIME PLOTTED => 16:49

Dist	COUNTY	ROUTE	POST MILES TOTAL PROJECT	SHEET No.	TOTAL SHEETS
04	Ala,CC	4,80,84, 92,238,etc.	Var	74	141

REGISTERED CIVIL ENGINEER 4-11-12 DATE

6-4-12
PLANS APPROVAL DATE

REGISTERED PROFESSIONAL ENGINEER Florante P. Perez No. 41030 Exp. 3-31-13 CIVIL STATE OF CALIFORNIA

THE STATE OF CALIFORNIA OR ITS OFFICERS OR AGENTS SHALL NOT BE RESPONSIBLE FOR THE ACCURACY OR COMPLETENESS OF SCANNED COPIES OF THIS PLAN SHEET.

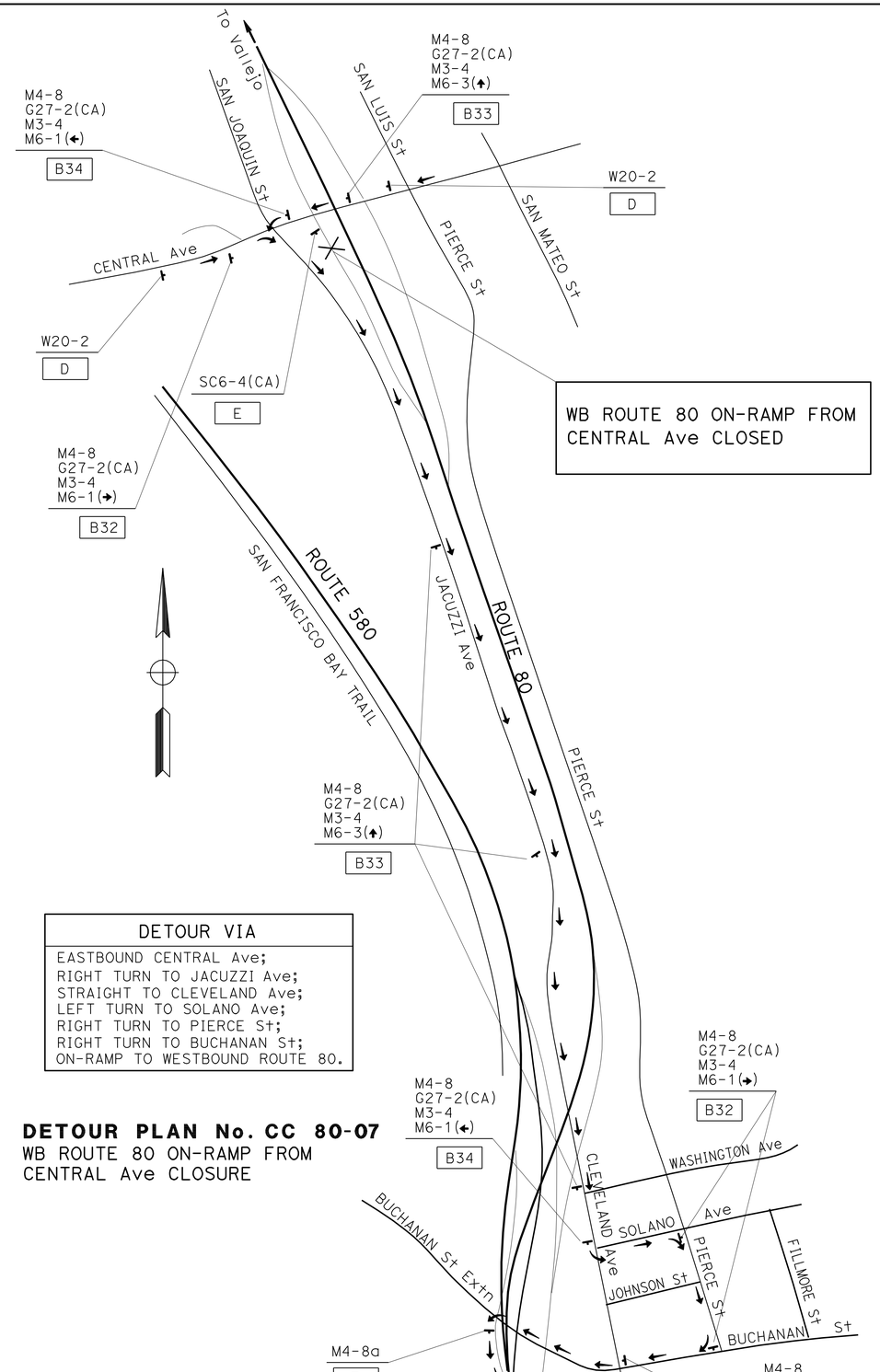

DETOUR VIA
EASTBOUND CENTRAL Ave; RIGHT TURN TO JACUZZI Ave; STRAIGHT TO CLEVELAND Ave; LEFT TURN TO SOLANO Ave; RIGHT TURN TO PIERCE St; RIGHT TURN TO BUCHANAN St; ON-RAMP TO WESTBOUND ROUTE 80.

DETOUR PLAN No. CC 80-07
WB ROUTE 80 ON-RAMP FROM CENTRAL Ave CLOSURE

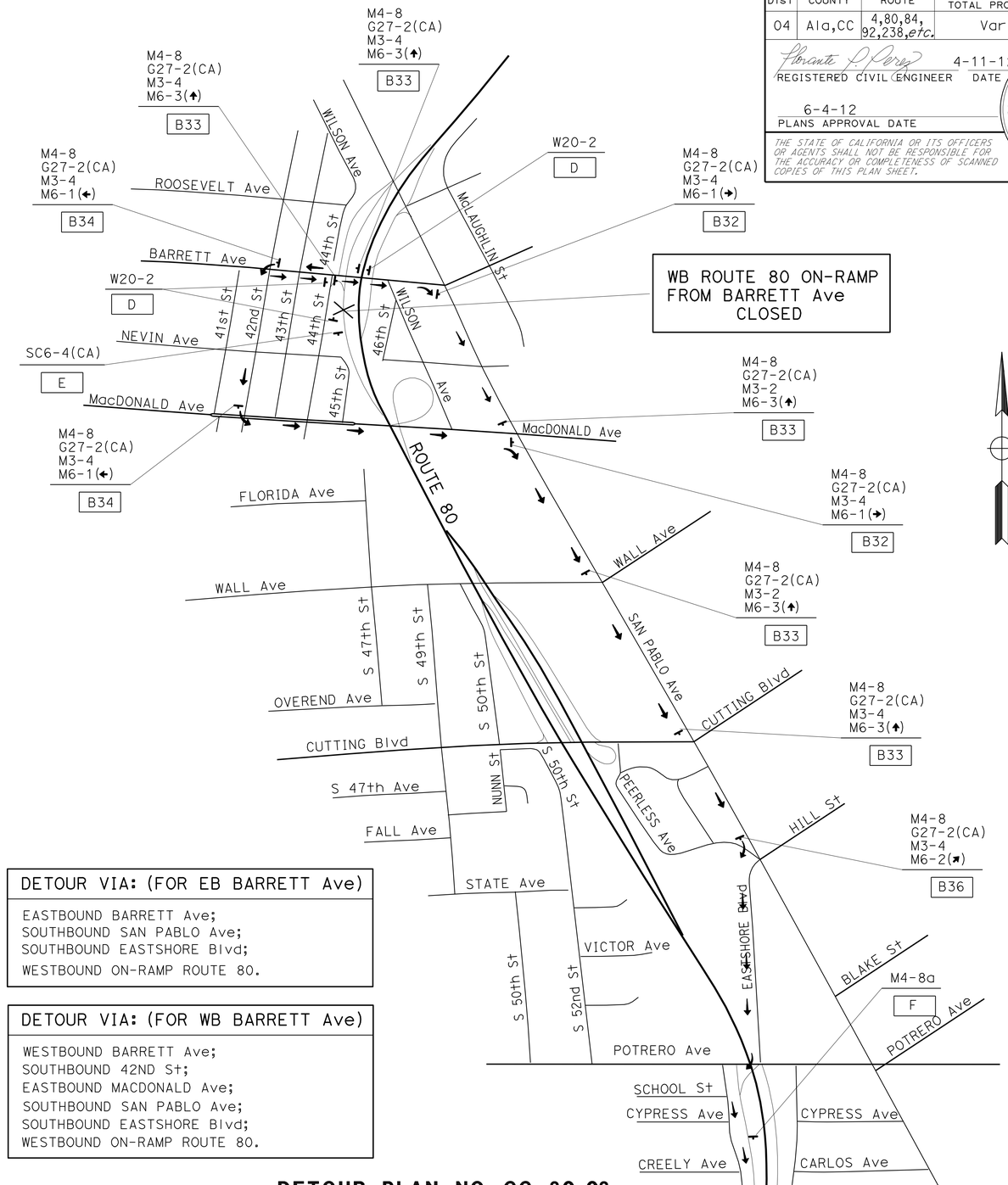

DETOUR VIA: (FOR EB BARRETT Ave)
EASTBOUND BARRETT Ave; SOUTHBOUND SAN PABLO Ave; SOUTHBOUND EASTSHORE Blvd; WESTBOUND ON-RAMP ROUTE 80.

DETOUR VIA: (FOR WB BARRETT Ave)
WESTBOUND BARRETT Ave; SOUTHBOUND 42ND St; EASTBOUND MACDONALD Ave; SOUTHBOUND SAN PABLO Ave; SOUTHBOUND EASTSHORE Blvd; WESTBOUND ON-RAMP ROUTE 80.

DETOUR PLAN NO. CC 80-08
WB ROUTE 80 ON-RAMP FROM BARRETT AVE CLOSURE

CONSTRUCTION AREA SIGNS
NO SCALE

CS-30

STATE OF CALIFORNIA - DEPARTMENT OF TRANSPORTATION
Caltrans® TRAFFIC

FUNCTIONAL SUPERVISOR: LOURDES DAVID
CALCULATED-DESIGNED BY: LEOPOLDO G. BONGATO/ CLAUDIA FANG
CHECKED BY: FLORANTE P. PEREZ
REVISED BY
DATE REVISED

LAST REVISION 04-16-12
DATE PLOTTED => 04-JUN-2012
TIME PLOTTED => 16:49

Dist	COUNTY	ROUTE	POST MILES TOTAL PROJECT	SHEET No.	TOTAL SHEETS
04	Ala,CC	4,80,84, 92,238,etc.	Var	75	141

Florante P. Perez 4-11-12
REGISTERED CIVIL ENGINEER DATE

6-4-12
PLANS APPROVAL DATE

REGISTERED PROFESSIONAL ENGINEER
Florante P. Perez
No. 41030
Exp. 3-31-13
CIVIL
STATE OF CALIFORNIA

THE STATE OF CALIFORNIA OR ITS OFFICERS OR AGENTS SHALL NOT BE RESPONSIBLE FOR THE ACCURACY OR COMPLETENESS OF SCANNED COPIES OF THIS PLAN SHEET.

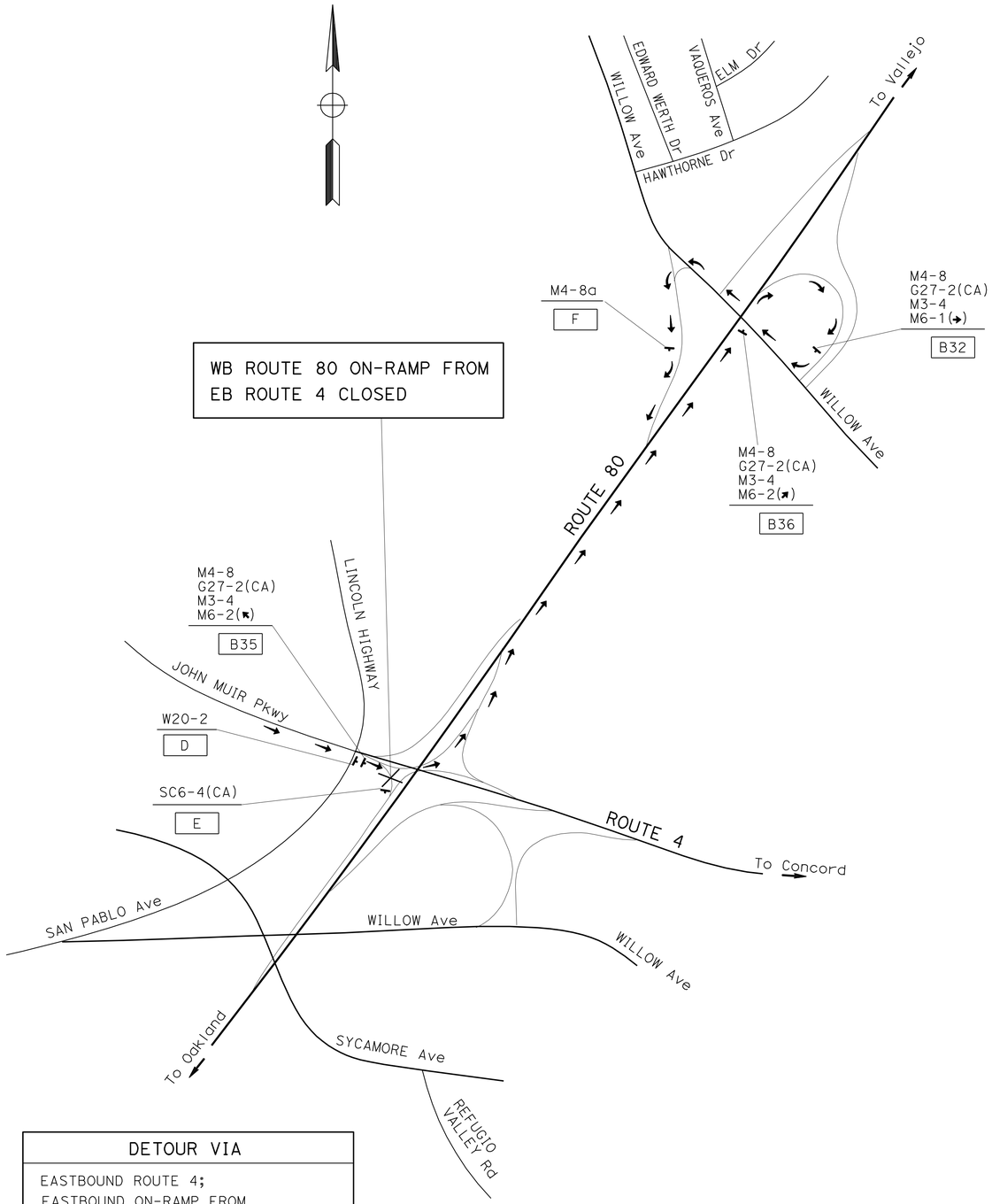

DETOUR VIA
EASTBOUND ROUTE 4;
EASTBOUND ON-RAMP FROM EASTBOUND ROUTE 4;
EASTBOUND OFF-RAMP TO WILLOW Ave; LEFT TURN TO WILLOW Ave; ON-RAMP TO WESTBOUND ROUTE 80.

DETOUR PLAN No. CC 80-09
WB ROUTE 80 ON-RAMP FROM
EB ROUTE 4 CLOSURE

CONSTRUCTION AREA SIGNS

NO SCALE

CS-31

STATE OF CALIFORNIA - DEPARTMENT OF TRANSPORTATION
Caltrans
TRAFFIC

FUNCTIONAL SUPERVISOR: LOURDES DAVID
CALCULATED-DESIGNED BY: LEOPOLDO G. BONGATO/ CLAUDIA FANG
CHECKED BY: FLORANTE P. PEREZ
REVISED BY
DATE REVISED

LAST REVISION 04-16-12
DATE PLOTTED => 04-JUN-2012
TIME PLOTTED => 16:49

Dist	COUNTY	ROUTE	POST MILES TOTAL PROJECT	SHEET No.	TOTAL SHEETS
04	Ala,CC	4,80,84, 92,238,*etc.*	Var	76	141

REGISTERED CIVIL ENGINEER 4-11-12 DATE

6-4-12
PLANS APPROVAL DATE

REGISTERED PROFESSIONAL ENGINEER Florante P. Perez No. 41030 Exp. 3-31-13 CIVIL STATE OF CALIFORNIA

THE STATE OF CALIFORNIA OR ITS OFFICERS OR AGENTS SHALL NOT BE RESPONSIBLE FOR THE ACCURACY OR COMPLETENESS OF SCANNED COPIES OF THIS PLAN SHEET.

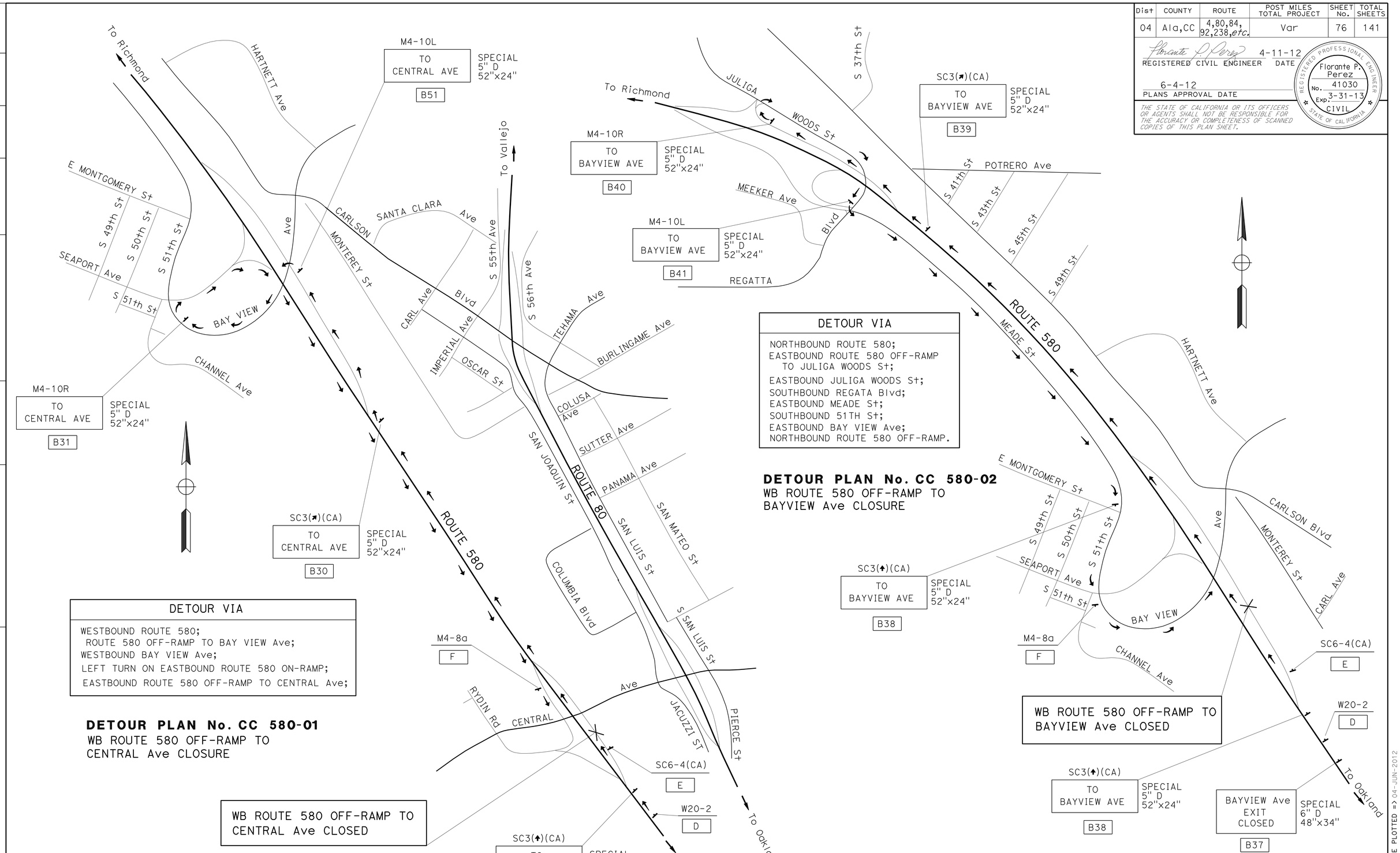

DETOUR VIA

NORTHBOUND ROUTE 580;
EASTBOUND ROUTE 580 OFF-RAMP TO JULIGA WOODS St;
EASTBOUND JULIGA WOODS St;
SOUTHBOUND REGATA Blvd;
EASTBOUND MEADE St;
SOUTHBOUND 51TH St;
EASTBOUND BAY VIEW Ave;
NORTHBOUND ROUTE 580 OFF-RAMP.

DETOUR PLAN No. CC 580-02
WB ROUTE 580 OFF-RAMP TO BAYVIEW Ave CLOSURE

DETOUR VIA

WESTBOUND ROUTE 580;
ROUTE 580 OFF-RAMP TO BAY VIEW Ave;
WESTBOUND BAY VIEW Ave;
LEFT TURN ON EASTBOUND ROUTE 580 ON-RAMP;
EASTBOUND ROUTE 580 OFF-RAMP TO CENTRAL Ave;

DETOUR PLAN No. CC 580-01
WB ROUTE 580 OFF-RAMP TO CENTRAL Ave CLOSURE

WB ROUTE 580 OFF-RAMP TO CENTRAL Ave CLOSED

WB ROUTE 580 OFF-RAMP TO BAYVIEW Ave CLOSED

CONSTRUCTION AREA SIGNS

NO SCALE

CS-32

STATE OF CALIFORNIA - DEPARTMENT OF TRANSPORTATION
Caltrans TRAFFIC

FUNCTIONAL SUPERVISOR: LOURDES DAVID
CALCULATED-DESIGNED BY: LEOPOLDO G. BONGATO/ CLAUDIA FANG
CHECKED BY: FLORANTE P. PEREZ
REVISED BY
DATE REVISED

LAST REVISION DATE PLOTTED => 04-JUN-2012
04-16-12 TIME PLOTTED => 16:50

Dist	COUNTY	ROUTE	POST MILES TOTAL PROJECT	SHEET No.	TOTAL SHEETS
04	Ala,CC	4,80,84, 92,238,etc.	Var	77	141

REGISTERED CIVIL ENGINEER 4-11-12 DATE

6-4-12
PLANS APPROVAL DATE

REGISTERED PROFESSIONAL ENGINEER Florante P. Perez No. 41030 Exp. 3-31-13 CIVIL STATE OF CALIFORNIA

THE STATE OF CALIFORNIA OR ITS OFFICERS OR AGENTS SHALL NOT BE RESPONSIBLE FOR THE ACCURACY OR COMPLETENESS OF SCANNED COPIES OF THIS PLAN SHEET.

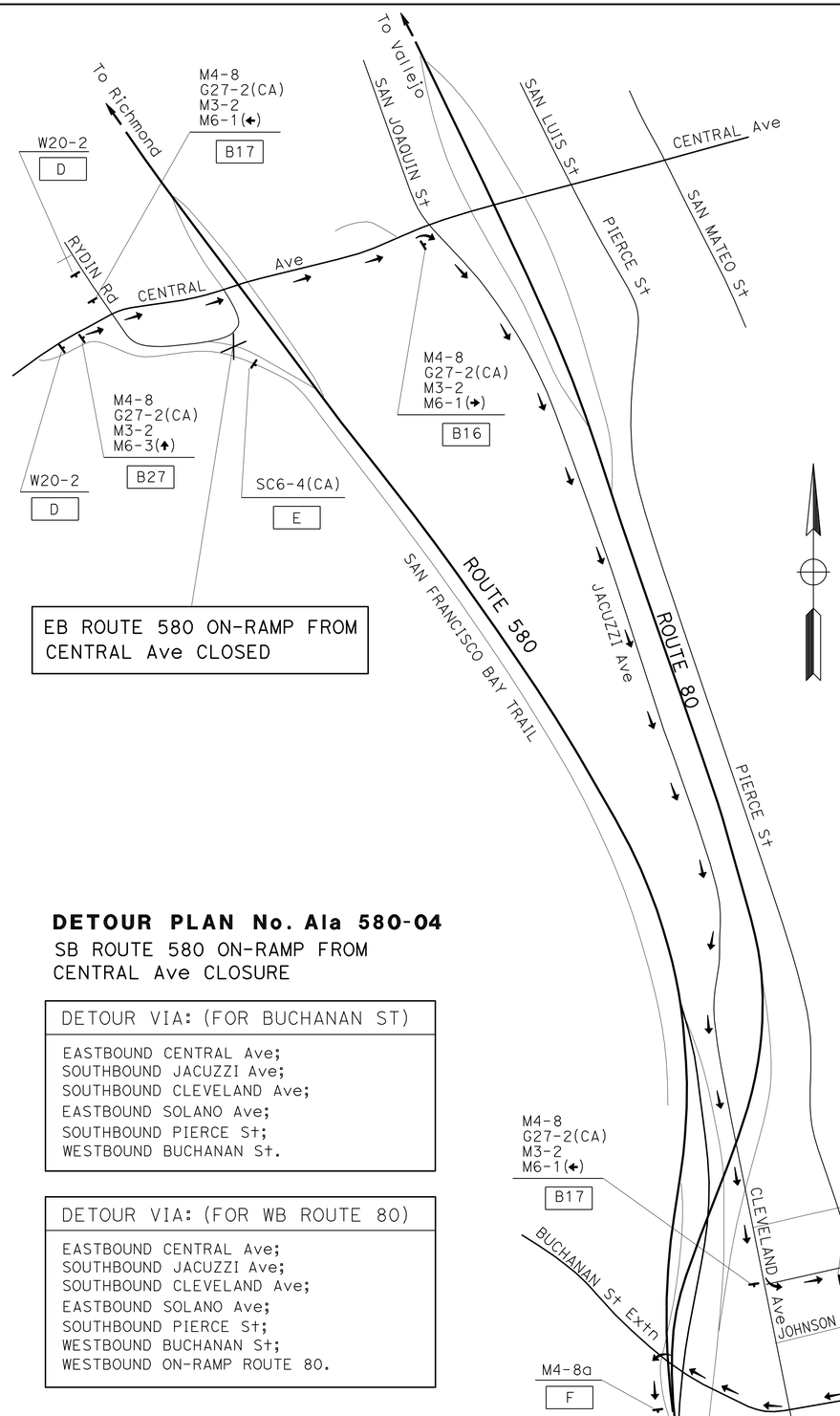

EB ROUTE 580 ON-RAMP FROM CENTRAL Ave CLOSED

DETOUR PLAN No. Ala 580-04

SB ROUTE 580 ON-RAMP FROM CENTRAL Ave CLOSURE

DETOUR VIA: (FOR BUCHANAN ST)
EASTBOUND CENTRAL Ave; SOUTHBOUND JACUZZI Ave; SOUTHBOUND CLEVELAND Ave; EASTBOUND SOLANO Ave; SOUTHBOUND PIERCE St; WESTBOUND BUCHANAN St.

DETOUR VIA: (FOR WB ROUTE 80)
EASTBOUND CENTRAL Ave; SOUTHBOUND JACUZZI Ave; SOUTHBOUND CLEVELAND Ave; EASTBOUND SOLANO Ave; SOUTHBOUND PIERCE St; WESTBOUND BUCHANAN St; WESTBOUND ON-RAMP ROUTE 80.

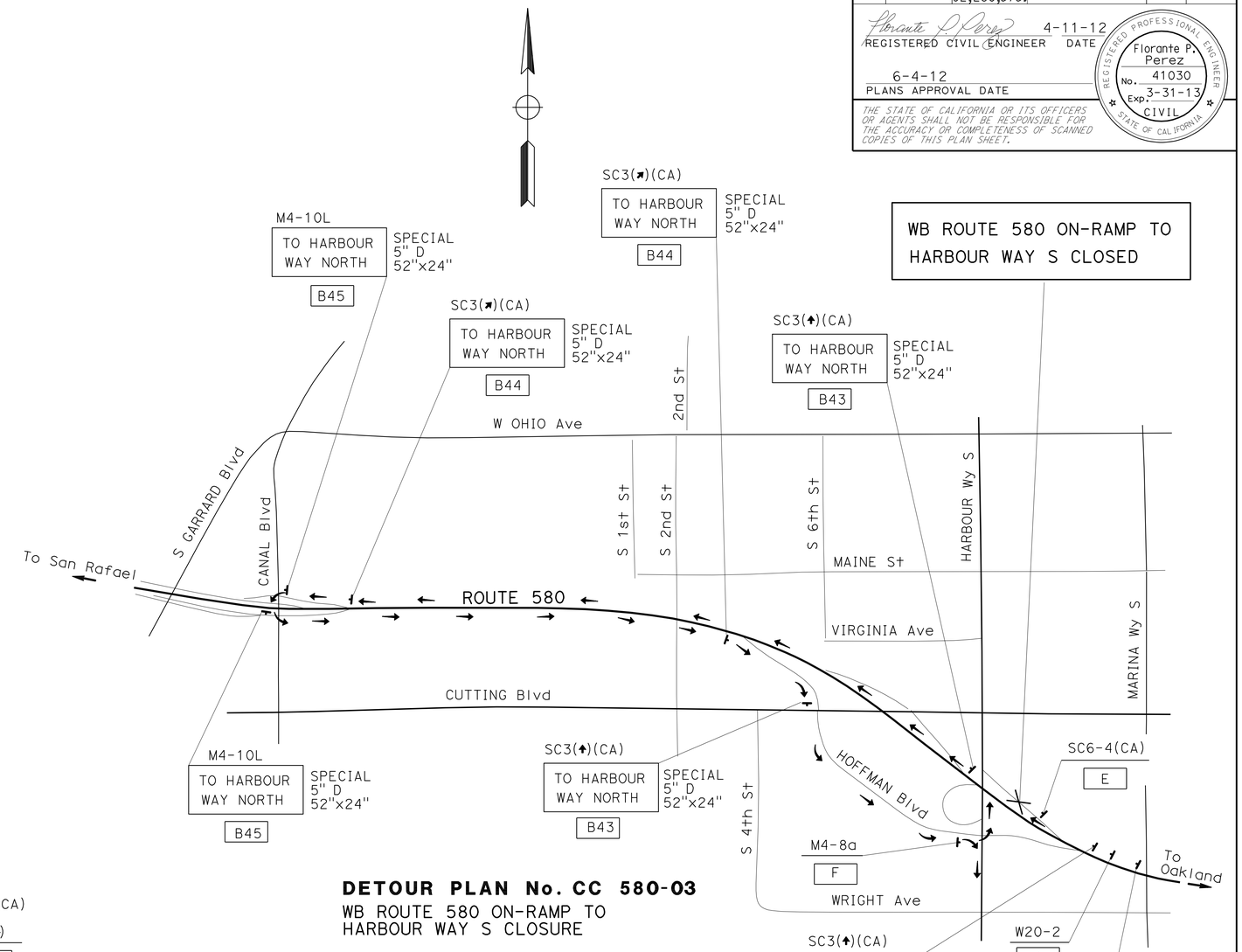

WB ROUTE 580 ON-RAMP TO HARBOUR WAY S CLOSED

DETOUR PLAN No. CC 580-03

WB ROUTE 580 ON-RAMP TO HARBOUR WAY S CLOSURE

DETOUR VIA
WESTBOUND ROUTE 580; WESTBOUND ROUTE 580 OFF-RAMP TO CANAL Blvd; SOUTHBOUND CANAL Blvd; EASTBOUND ROUTE 580 ON-RAMP; EASTBOUND OFF-RAMP TO CUTTING Blvd; SOUTHBOUND HOFFMAN Blvd; NORTHBOUND/SOUTHBOUND HARBOUR WY S.

CONSTRUCTION AREA SIGNS

NO SCALE

CS-33

STATE OF CALIFORNIA - DEPARTMENT OF TRANSPORTATION
Caltrans
TRAFFIC

FUNCTIONAL SUPERVISOR: LOURDES DAVID
CALCULATED-DESIGNED BY: LEOPOLDO G. BONGATO/CLAUDIA FANG
CHECKED BY: FLORANTE P. PEREZ
REVISED BY
DATE REVISED

LAST REVISION 04-16-12
DATE PLOTTED => 04-JUN-2012
TIME PLOTTED => 16:50

Dist	COUNTY	ROUTE	POST MILES TOTAL PROJECT	SHEET No.	TOTAL SHEETS
04	Ala,CC	4,80,84, 92,238,*etc.*	Var	78	141

REGISTERED CIVIL ENGINEER 4-11-12 DATE

6-4-12
PLANS APPROVAL DATE

REGISTERED PROFESSIONAL ENGINEER Florante P. Perez No. 41030 Exp. 3-31-13 CIVIL STATE OF CALIFORNIA

THE STATE OF CALIFORNIA OR ITS OFFICERS OR AGENTS SHALL NOT BE RESPONSIBLE FOR THE ACCURACY OR COMPLETENESS OF SCANNED COPIES OF THIS PLAN SHEET.

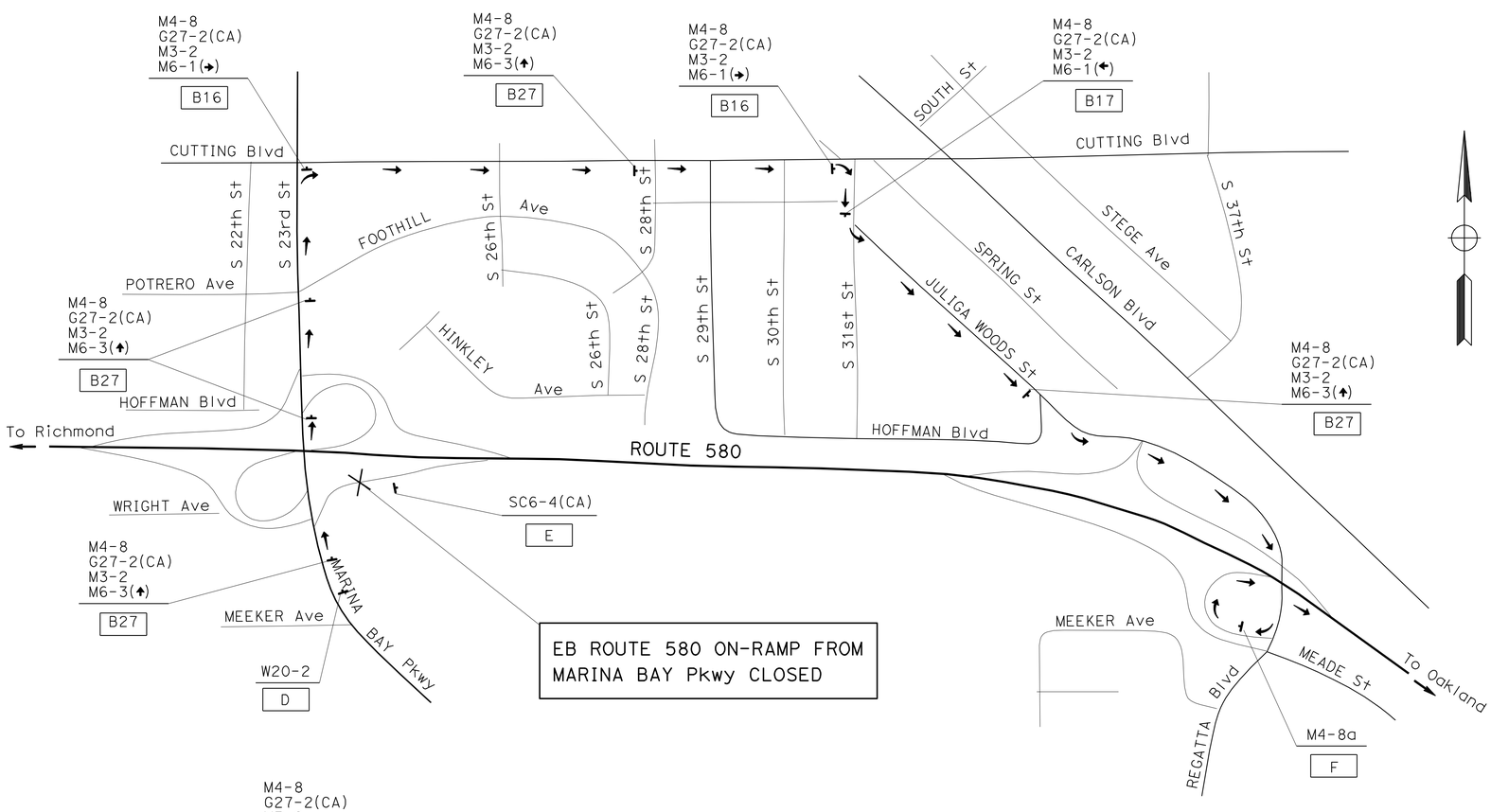

DETOUR PLAN No. CC 580-05

EB ROUTE 580 ON-RAMP FROM
MARINA BAY Pkwy CLOSURE

DETOUR VIA
NORTHBOUND S 23RD St;
EASTBOUND CUTTING Blvd;
SOUTHBOUND S 31ST St;
EASTBOUND JULIGA WOODS St;
EASTBOUND ON-RAMP ROUTE 580.

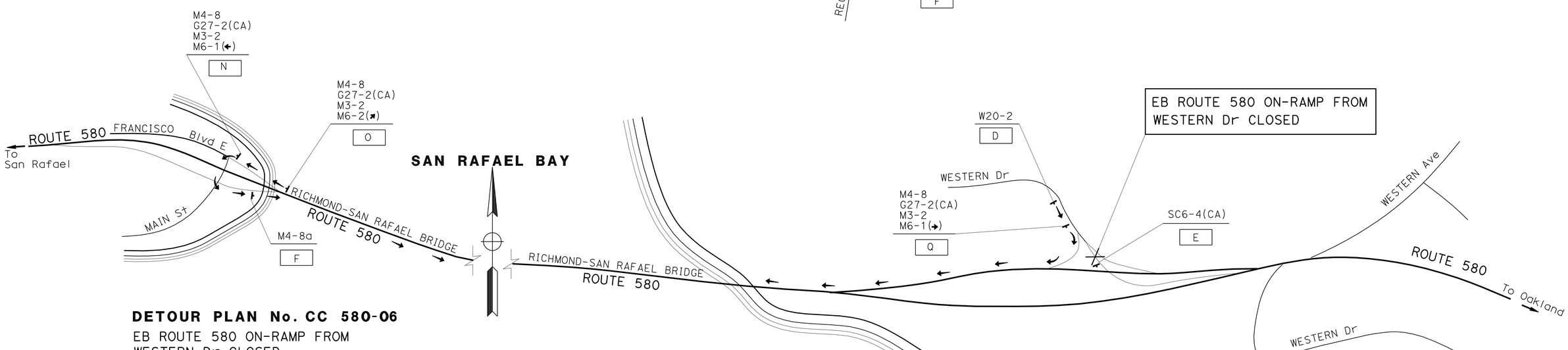

DETOUR PLAN No. CC 580-06

EB ROUTE 580 ON-RAMP FROM
WESTERN Dr CLOSED

DETOUR VIA
WESTBOUND ON-RAMP FROM WESTERN Dr;
WESTBOUND ROUTE 580;
EASTBOUND OFF-RAMP TO FRANCISCO Blvd;
SOUTHBOUND MAIN St;
EASTBOUND ON-RAMP TO ROUTE 580.

CONSTRUCTION AREA SIGNS

NO SCALE

CS-34

STATE OF CALIFORNIA - DEPARTMENT OF TRANSPORTATION
Caltrans® TRAFFIC

FUNCTIONAL SUPERVISOR: LOURDES DAVID
CALCULATED-DESIGNED BY: LEOPOLDO G. BONGATO/ CLAUDIA FANG
CHECKED BY: FLORANTE P. PEREZ
REVISED BY / DATE REVISED

LAST REVISION 04-16-12 | DATE PLOTTED => 04-JUN-2012 | TIME PLOTTED => 16:50

Dist	COUNTY	ROUTE	POST MILES TOTAL PROJECT	SHEET No.	TOTAL SHEETS
04	Ala,CC	4,80,84, 92,238,etc.	Var	79	141

Florante P. Perez — REGISTERED CIVIL ENGINEER — DATE 4-11-12

6-4-12
PLANS APPROVAL DATE

REGISTERED PROFESSIONAL ENGINEER — Florante P. Perez — No. 41030 — Exp. 3-31-13 — CIVIL — STATE OF CALIFORNIA

THE STATE OF CALIFORNIA OR ITS OFFICERS OR AGENTS SHALL NOT BE RESPONSIBLE FOR THE ACCURACY OR COMPLETENESS OF SCANNED COPIES OF THIS PLAN SHEET.

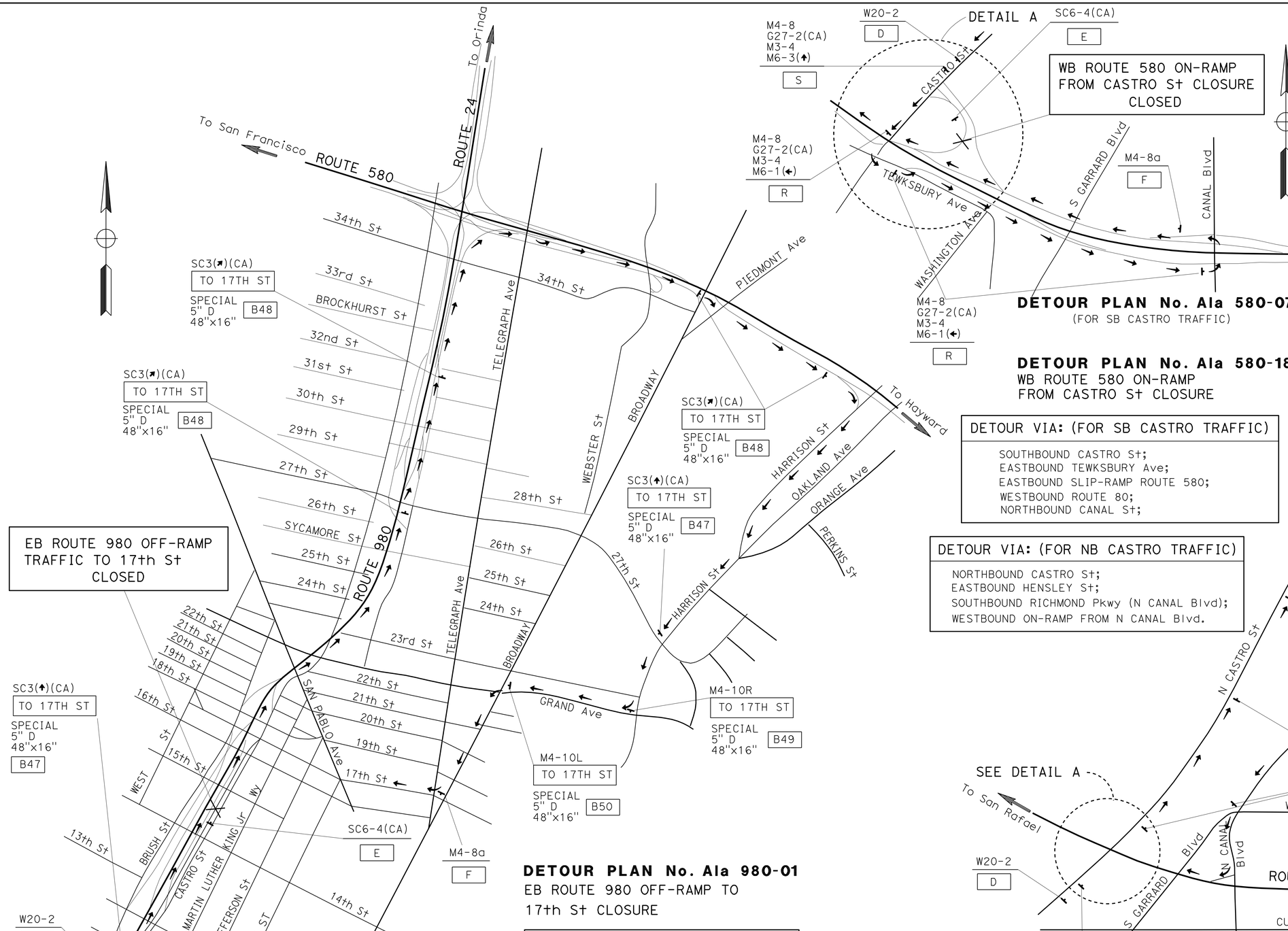

DETOUR VIA: (FOR SB CASTRO TRAFFIC)

SOUTHBOUND CASTRO St;
EASTBOUND TEWKSBURY Ave;
EASTBOUND SLIP-RAMP ROUTE 580;
WESTBOUND ROUTE 80;
NORTHBOUND CANAL St;

DETOUR VIA: (FOR NB CASTRO TRAFFIC)

NORTHBOUND CASTRO St;
EASTBOUND HENSLEY St;
SOUTHBOUND RICHMOND Pkwy (N CANAL Blvd);
WESTBOUND ON-RAMP FROM N CANAL Blvd.

DETOUR VIA

EASTBOUND ROUTE 980;
EASTBOUND ROUTE 580;
SOUTHBOUND OFF-RAMP TO HARRISON St;
RIGHT TURN TO HARRISON St;
RIGHT TURN TO GRAND Ave;
LEFT TURN TO BROADWAY;
LEFT TURN TO 17TH St.

CONSTRUCTION AREA SIGNS

NO SCALE

CS-35

STATE OF CALIFORNIA - DEPARTMENT OF TRANSPORTATION
Caltrans® TRAFFIC

FUNCTIONAL SUPERVISOR: LOURDES DAVID
CALCULATED-DESIGNED BY: LEOPOLDO G. BONGATO / CLAUDIA FANG
CHECKED BY: FLORANTE P. PEREZ
REVISED BY
DATE REVISED

LAST REVISION — DATE PLOTTED => 04-JUN-2012 — TIME PLOTTED => 16:50
04-16-12

Dist	COUNTY	ROUTE	POST MILES TOTAL PROJECT	SHEET No.	TOTAL SHEETS
04	Ala,CC	4,80,84, 92,238,etc.	Var	80	141

REGISTERED CIVIL ENGINEER 4-11-12 DATE

6-4-12
PLANS APPROVAL DATE

REGISTERED PROFESSIONAL ENGINEER Florante P. Perez No. 41030 Exp. 3-31-13 CIVIL STATE OF CALIFORNIA

THE STATE OF CALIFORNIA OR ITS OFFICERS OR AGENTS SHALL NOT BE RESPONSIBLE FOR THE ACCURACY OR COMPLETENESS OF SCANNED COPIES OF THIS PLAN SHEET.

STATIONARY MOUNTED CONSTRUCTION AREA SIGNS

SHEET No.	SIGN	CODE	SIGN MESSAGE	PANEL SIZE (INCH x INCH)	No. OF POSTS AND SIZE (EA-INCH x INCH)	No. OF SIGNS	REMARKS
CS-1	A	W20-1	ROAD WORK AHEAD	60 x 60	2 - 4 x 6	174	
	B	G20-2	END ROAD WORK	36 x 18	1 - 4 x 4	181	
	C	W20-1	ROAD WORK AHEAD	48 x 48	1 - 4 x 4	6	
CS-2 TO CS-35	D	W20-2	DETOUR AHEAD	48 x 48	1 - 4 x 4	109	
	E	SC6-8(CA)	RAMP CLOSED DATE TIME	48 x 60	1 - 4 x 6	69	
	F	M4-8a	END DETOUR	24 x 18	1 - 4 x 4	68	
	G	M4-8	DETOUR	24 x 12	1 - 4 x 6	1	
		G28-2(CA)	ROUTE 4 SHIELD	24 x 25			
		M3-2	EAST	21 x 15			
		M6-1(→)	RIGHT ARROW	24 x 12			
	H	M4-8	DETOUR	24 x 12	1 - 4 x 6	2	
		G28-2(CA)	ROUTE 4 SHIELD	24 x 25			
		M3-2	EAST	21 x 15			
		M6-1(←)	LEFT ARROW	24 x 12			
	I	M4-8	DETOUR	24 x 12	1 - 4 x 6	5	
		G28-2(CA)	ROUTE 4 SHIELD	24 x 25			
		M3-4	WEST	21 x 15			
		M6-1(←)	LEFT ARROW	24 x 12			
	J	M4-8	DETOUR	24 x 12	1 - 4 x 6	5	
		G28-2(CA)	ROUTE 4 SHIELD	24 x 25			
		M3-4	WEST	21 x 15			
		M6-1(→)	RIGHT ARROW	24 x 12			
	K	M4-8	DETOUR	24 x 12	1 - 4 x 6	5	
		G28-2(CA)	ROUTE 4 SHIELD	24 x 25			
		M3-4	WEST	21 x 15			
		M6-3(↑)	UP ARROW	24 x 12			
	L	M4-8	DETOUR	24 x 12	1 - 4 x 6	3	
		G28-2(CA)	ROUTE 4 SHIELD	24 x 25			
		M3-4	WEST	21 x 15			
		M6-2(↗)	UP RIGHT ARROW	24 x 12			
	M	M4-8	DETOUR	24 x 12	1 - 4 x 6	26	
		G27-2(CA)	ROUTE 580 SHIELD	21 x 18			
		M3-2	EAST	21 x 15			
		M6-3(↑)	UP ARROW	24 x 12			
	N	M4-8	DETOUR	24 x 12	1 - 4 x 6	14	
		G27-2(CA)	ROUTE 580 SHIELD	21 x 18			
		M3-2	EAST	21 x 15			
		M6-1(←)	LEFT ARROW	24 x 12			
	O	M4-8	DETOUR	24 x 12	1 - 4 x 6	7	
		G27-2(CA)	ROUTE 580 SHIELD	21 x 18			
		M3-2	EAST	21 x 15			
		M6-2(↗)	UP RIGHT ARROW	24 x 12			
	P	SPECIAL	ROUTE 580 EAST RAMP CLOSED	48 x 30	1 - 4 x 6	1	

STATIONARY MOUNTED CONSTRUCTION AREA SIGNS

SHEET No.	SIGN	CODE	SIGN MESSAGE	PANEL SIZE (INCH x INCH)	No. OF POSTS AND SIZE (EA-INCH x INCH)	No. OF SIGNS	REMARKS
CS-2 TO CS-35	Q	M4-8	DETOUR	24 x 12	1 - 4 x 6	10	
		G27-2(CA)	ROUTE 580 SHIELD	21 x 18			
		M3-2	EAST	21 x 15			
		M6-1(→)	RIGHT ARROW	24 x 12			
	R	M4-8	DETOUR	24 x 12	1 - 4 x 6	14	
		G27-2(CA)	ROUTE 580 SHIELD	21 x 18			
		M3-4	WEST	21 x 15			
		M6-1(←)	LEFT ARROW	24 x 12			
	S	M4-8	DETOUR	24 x 12	1 - 4 x 6	30	
		G27-2(CA)	ROUTE 580 SHIELD	21 x 18			
		M3-4	WEST	21 x 15			
		M6-3(↑)	UP ARROW	24 x 12			
	T	M4-8	DETOUR	24 x 12	1 - 4 x 6	9	
		G27-2(CA)	ROUTE 580 SHIELD	21 x 18			
		M3-4	WEST	21 x 15			
		M6-1(→)	RIGHT ARROW	24 x 12			
	U	M4-8	DETOUR	24 x 12	1 - 4 x 6	2	
		G27-2(CA)	ROUTE 680 SHIELD	21 x 18			
		M3-1	NORTH	21 x 15			
		M6-2(↗)	UP RIGHT ARROW	24 x 12			
	V	M4-8	DETOUR	24 x 12	1 - 4 x 6	5	
		G27-2(CA)	ROUTE 680 SHIELD	21 x 18			
		M3-1	NORTH	21 x 15			
		M6-1(→)	RIGHT ARROW	24 x 12			
	W	M4-8	DETOUR	24 x 12	1 - 4 x 6	7	
		G27-2(CA)	ROUTE 680 SHIELD	21 x 18			
		M3-3	SOUTH	21 x 15			
		M6-1(←)	LEFT ARROW	24 x 12			
	X	M4-8	DETOUR	24 x 12	1 - 4 x 6	6	
		G27-2(CA)	ROUTE 680 SHIELD	21 x 18			
		M3-3	SOUTH	21 x 15			
		M6-2(↗)	UP RIGHT ARROW	24 x 12			
	Y	M4-8	DETOUR	24 x 12	1 - 4 x 6	2	
		G27-2(CA)	ROUTE 680 SHIELD	21 x 18			
		M3-3	SOUTH	21 x 15			
		M6-1(→)	RIGHT ARROW	24 x 12			

CONSTRUCTION AREA SIGNS

NO SCALE

CS-36

STATE OF CALIFORNIA - DEPARTMENT OF TRANSPORTATION
Caltrans
TRAFFIC

FUNCTIONAL SUPERVISOR: LOURDES DAVID
CALCULATED-DESIGNED BY: FLORANTE P. PEREZ
CHECKED BY: LEOPOLDO G. BONGATO
REVISED BY
DATE REVISED

LAST REVISION 04-16-12
DATE PLOTTED => 04-JUN-2012
TIME PLOTTED => 16:50

Dist	COUNTY	ROUTE	POST MILES TOTAL PROJECT	SHEET No.	TOTAL SHEETS
04	Ala,CC	4,80,84, 92,238,etc.	Var	81	141

REGISTERED CIVIL ENGINEER 4-11-12 DATE

6-4-12
PLANS APPROVAL DATE

REGISTERED PROFESSIONAL ENGINEER Florante P. Perez No. 41030 Exp. 3-31-13 CIVIL STATE OF CALIFORNIA

THE STATE OF CALIFORNIA OR ITS OFFICERS OR AGENTS SHALL NOT BE RESPONSIBLE FOR THE ACCURACY OR COMPLETENESS OF SCANNED COPIES OF THIS PLAN SHEET.

STATIONARY MOUNTED CONSTRUCTION AREA SIGNS

SHEET No.	SIGN	CODE	SIGN MESSAGE	PANEL SIZE (INCH x INCH)	No. OF POSTS AND SIZE (EA-INCH x INCH)	No. OF SIGNS	REMARKS
CS-2 TO CS-35	Z	M4-8	DETOUR	24 x 12	1 - 4 x 6	3	
		G27-2(CA)	ROUTE 680 SHIELD	21 x 18			
		M3-3	SOUTH	21 x 15			
		M6-3(↑)	UP ARROW	24 x 12			
	A1	M4-8	DETOUR	24 x 12	1 - 4 x 6	3	
		G27-2(CA)	ROUTE 680 SHIELD	21 x 18			
		M3-1	NORTH	21 x 15			
		M6-3(↑)	UP ARROW	24 x 12			
	A2	M4-8	DETOUR	24 x 12	1 - 4 x 6	12	
		G27-2(CA)	ROUTE 880 SHIELD	21 x 18			
		M3-3	SOUTH	21 x 15			
		M6-3(↑)	UP ARROW	24 x 12			
	A3	M4-8	DETOUR	24 x 12	1 - 4 x 6	17	
		G27-2(CA)	ROUTE 880 SHIELD	21 x 18			
		M3-3	SOUTH	21 x 15			
		M6-1(←)	LEFT ARROW	24 x 12			
	A4	M4-8	DETOUR	24 x 12	1 - 4 x 6	2	
		G27-2(CA)	ROUTE 880 SHIELD	21 x 18			
		M3-3	SOUTH	21 x 15			
		M6-1(→)	RIGHT ARROW	24 x 12			
	A5	M4-8	DETOUR	24 x 12	1 - 4 x 6	2	
		G27-2(CA)	ROUTE 880 SHIELD	21 x 18			
		M3-3	SOUTH	21 x 15			
		M6-2(↗)	UP RIGHT ARROW	24 x 12			
	A6	M4-8	DETOUR	24 x 12	1 - 4 x 6	1	
		G28-2(CA)	ROUTE 84 SHIELD	24 x 25			
		M3-4	WEST	21 x 15			
		M6-2(←)	LEFT ARROW	24 x 12			
	A7	M4-8	DETOUR	24 x 12	1 - 4 x 6	1	
		G28-2(CA)	ROUTE 84 SHIELD	24 x 25			
		M3-4	WEST	21 x 15			
		M6-2(↗)	UP RIGHT ARROW	24 x 12			
	A8	M4-8	DETOUR	24 x 12	1 - 4 x 6	1	
		G28-2(CA)	ROUTE 84 SHIELD	24 x 25			
		M3-4	WEST	21 x 15			
		M6-3(↑)	UP ARROW	24 x 12			
	A9	SPECIAL	ROUTE 84 WEST RAMP CLOSED	48 x 30	1 - 4 x 6	1	
	A10	M4-8	DETOUR	24 x 12	1 - 4 x 6	16	
		G27-2(CA)	ROUTE 880 SHIELD	21 x 18			
		M3-1	NORTH	21 x 15			
		M6-1(←)	LEFT ARROW	24 x 12			

STATIONARY MOUNTED CONSTRUCTION AREA SIGNS

SHEET No.	SIGN	CODE	SIGN MESSAGE	PANEL SIZE (INCH x INCH)	No. OF POSTS AND SIZE (EA-INCH x INCH)	No. OF SIGNS	REMARKS
CS-2 TO CS-35	A11	M4-8	DETOUR	24 x 12	1 - 4 x 6	18	
		G27-2(CA)	ROUTE 880 SHIELD	21 x 18			
		M3-1	NORTH	21 x 15			
		M6-3(↑)	UP ARROW	24 x 12			
	A12	M4-8	DETOUR	24 x 12	1 - 4 x 6	4	
		G27-2(CA)	ROUTE 880 SHIELD	21 x 18			
		M3-1	NORTH	21 x 15			
		M6-2(↗)	UP RIGHT ARROW	24 x 12			
	A13	SPECIAL	ROUTE 880 NORTH RAMP CLOSED	48 x 30	1 - 4 x 6	4	
	A14	M4-8	DETOUR	24 x 12	1 - 4 x 6	3	
		G27-2(CA)	ROUTE 238 SHIELD	21 x 18			
		G27-2(CA)	ROUTE 880 SHIELD	21 x 18			
		M3-3	SOUTH	21 x 15			
		M6-1(←)	LEFT ARROW	24 x 12			
	A15	M4-8	DETOUR	24 x 12	1 - 4 x 6	7	
		G27-2(CA)	ROUTE 880 SHIELD	21 x 18			
		G27-2(CA)	ROUTE 238 SHIELD	21 x 18			
		M3-3	SOUTH	21 x 15			
		M6-3(←)	UP ARROW	24 x 12			
	A16	M4-8	DETOUR	24 x 12	1 - 4 x 6	4	
		G27-2(CA)	ROUTE 880 SHIELD	21 x 18			
		G27-2(CA)	ROUTE 238 SHIELD	21 x 18			
		M3-3	SOUTH	21 x 15			
		M6-1(→)	RIGHT ARROW	24 x 12			
	A17	M4-8	DETOUR	24 x 12	1 - 4 x 6	9	
		G27-2(CA)	ROUTE 880 SHIELD	21 x 18			
		M3-1	NORTH	21 x 15			
		M6-1(→)	RIGHT ARROW	24 x 12			
	B1	M4-8	DETOUR	24 x 12	1 - 4 x 6	4	
		G28-2(CA)	ROUTE 84 SHIELD	24 x 25			
		M3-3	SOUTH	21 x 15			
		M6-3(↑)	UP ARROW	24 x 12			

CONSTRUCTION AREA SIGNS

NO SCALE

CS-37

STATE OF CALIFORNIA - DEPARTMENT OF TRANSPORTATION
Caltrans
TRAFFIC

FUNCTIONAL SUPERVISOR: LOURDES DAVID
CALCULATED-DESIGNED BY: LEOPOLDO G. BONGATO
CHECKED BY: FLORANTE P. PEREZ
REVISED BY
DATE REVISED

LAST REVISION 04-16-12
DATE PLOTTED => 04-JUN-2012
TIME PLOTTED => 16:50

Dist	COUNTY	ROUTE	POST MILES TOTAL PROJECT	SHEET No.	TOTAL SHEETS
04	Ala,CC	4,80,84, 92,238,etc.	Var	82	141

Florante P. Perez 4-11-12
REGISTERED CIVIL ENGINEER DATE

6-4-12
PLANS APPROVAL DATE

REGISTERED PROFESSIONAL ENGINEER Florante P. Perez No. 41030 Exp. 3-31-13 CIVIL STATE OF CALIFORNIA

THE STATE OF CALIFORNIA OR ITS OFFICERS OR AGENTS SHALL NOT BE RESPONSIBLE FOR THE ACCURACY OR COMPLETENESS OF SCANNED COPIES OF THIS PLAN SHEET.

STATIONARY MOUNTED CONSTRUCTION AREA SIGNS

SHEET No.	SIGN	CODE	SIGN MESSAGE	PANEL SIZE (INCH x INCH)	No. OF POSTS AND SIZE (EA-INCH x INCH)	No. OF SIGNS	REMARKS
CS-22 TO CS-35	B2	M4-8	DETOUR	24 x 12	1 - 4 x 6	2	
		G28-2(CA)	ROUTE 84 SHIELD	24 x 25			
		M3-3	SOUTH	21 x 15			
		M6-2(↗)	UP RIGHT ARROW	24 x 12			
	B3	M4-8	DETOUR	24 x 12	1 - 4 x 6	2	
		G28-2(CA)	ROUTE 84 SHIELD	24 x 25			
		M3-3	SOUTH	21 x 15			
		M6-1(→)	RIGHT ARROW	24 x 12			
	B4	M4-8	DETOUR	24 x 12	1 - 4 x 6	1	
		G28-2(CA)	ROUTE 84 SHIELD	21 x 18			
		M3-3	SOUTH	21 x 15			
		M6-1(←)	LEFT ARROW	24 x 12			
	B5	M4-8	DETOUR	24 x 12	1 - 4 x 6	3	
		G28-2(CA)	ROUTE 92 SHIELD	21 x 18			
		M3-4	WEST	21 x 15			
		M6-3(↑)	UP ARROW	24 x 12			
	B6	SPECIAL	ROUTE 92 WEST RAMP CLOSED	48 x 30	1 - 4 x 6	3	
	B7	M4-8	DETOUR	24 x 12	1 - 4 x 6	2	
		G28-2(CA)	ROUTE 92 SHIELD	21 x 18			
		M3-4	WEST	21 x 15			
		M6-1(→)	RIGHT ARROW	24 x 12			
	B8	M4-8	DETOUR	24 x 12	1 - 4 x 6	4	
		G28-2(CA)	ROUTE 92 SHIELD	21 x 18			
		M3-4	WEST	21 x 15			
		M6-1(←)	LEFT ARROW	24 x 12			
	B9	M4-8	DETOUR	24 x 12	1 - 4 x 6	2	
		G28-2(CA)	ROUTE 92 SHIELD	21 x 18			
		M3-4	WEST	21 x 15			
		M6-2(↗)	UP RIGHT ARROW	24 x 12			
	B10	SC3(↑)(CA)	DETOUR UP ARROW	48 x 18	1 - 4 x 6	1	
		SPECIAL	OAKLAND	48 x 18			
	B11	M4-10R	DETOUR RIGHT	48 x 18	1 - 4 x 6	1	
		SPECIAL	OAKLAND	48 x 18			
	B12	M4-10L	DETOUR LEFT	48 x 18	1 - 4 x 6	1	
		SPECIAL	OAKLAND	48 x 18			
	B13	SC3(↑)(CA)	DETOUR UP ARROW	48 x 18	1 - 4 x 6	1	
		SPECIAL	UNIVERSITY Ave	54 x 24			
	B14	SC3(↗)(CA)	DETOUR UP RIGHT ARROW	48 x 18	1 - 4 x 6	2	
		SPECIAL	UNIVERSITY Ave	54 x 24			
	B15	M4-10L	DETOUR LEFT	48 x 18	1 - 4 x 6	2	
		SPECIAL	UNIVERSITY Ave	54 x 24			

STATIONARY MOUNTED CONSTRUCTION AREA SIGNS

SHEET No.	SIGN	CODE	SIGN MESSAGE	PANEL SIZE (INCH x INCH)	No. OF POSTS AND SIZE (EA-INCH x INCH)	No. OF SIGNS	REMARKS
CS-2 TO CS-35	B16	M4-8	DETOUR	24 x 12	1 - 4 x 6	12	
		G27-2(CA)	ROUTE 80 SHIELD	21 x 18			
		M3-2	EAST	21 x 15			
		M6-1(→)	RIGHT ARROW	24 x 12			
	B17	M4-8	DETOUR	24 x 12	1 - 4 x 6	12	
		G27-2(CA)	ROUTE 80 SHIELD	21 x 18			
		M3-2	EAST	21 x 15			
		M6-1(←)	LEFT ARROW	24 x 12			
	B18	M4-8	DETOUR	24 x 12	1 - 4 x 6	1	
		G27-2(CA)	ROUTE 80 SHIELD	21 x 18			
		M3-2	EAST	21 x 15			
		SPECIAL	U-TURN ARROW	24 x 24			
	B19	SC3(↑)(CA)	DETOUR UP ARROW	48 x 18	1 - 4 x 6	1	
		SPECIAL	RICHMOND PARKWAY	48 x 24			
	B20	SC3(↗)(CA)	DETOUR UP RIGHT ARROW	48 x 18	1 - 4 x 6	1	
		SPECIAL	RICHMOND PARKWAY	48 x 24			
	B21	M4-10L	DETOUR LEFT	48 x 18	1 - 4 x 6	2	
		SPECIAL	RICHMOND PARKWAY	48 x 24			
	B22	SC3(↑)(CA)	DETOUR UP ARROW	48 x 18	1 - 4 x 6	1	
		SPECIAL	CENTRAL Ave	48 x 24			
	B23	SC3(↗)(CA)	DETOUR UP RIGHT ARROW	48 x 18	1 - 4 x 6	1	
		SPECIAL	CENTRAL Ave	48 x 24			
	B24	M4-10L	DETOUR LEFT	48 x 18	1 - 4 x 6	2	
		SPECIAL	CENTRAL Ave	48 x 24			
	B25	M4-8	DETOUR	24 x 12	1 - 4 x 6	1	
		G27-2(CA)	ROUTE 80 SHIELD	21 x 18			
		M3-2	EAST	21 x 15			
		M6-2(↖)	UP LEFT ARROW	24 x 12			
	B26	M4-8	DETOUR	24 x 12	1 - 4 x 6	2	
		G27-2(CA)	ROUTE 80 SHIELD	21 x 18			
		M3-2	EAST	21 x 15			
		M6-2(↗)	UP RIGHT ARROW	24 x 12			

CONSTRUCTION AREA SIGNS

NO SCALE

CS-38

STATE OF CALIFORNIA - DEPARTMENT OF TRANSPORTATION
Caltrans
TRAFFIC

FUNCTIONAL SUPERVISOR: LOURDES DAVID
CALCULATED-DESIGNED BY: LEOPOLDO G. BONGATO/ CLAUDIA FANG
CHECKED BY: FLORANTE P. PEREZ
REVISED BY
DATE REVISED

LAST REVISION 04-16-12
DATE PLOTTED => 04-JUN-2012
TIME PLOTTED => 16:50

Dist	COUNTY	ROUTE	POST MILES TOTAL PROJECT	SHEET No.	TOTAL SHEETS
04	Ala,CC	4,80,84, 92,238,etc.	Var	83	141

REGISTERED CIVIL ENGINEER 4-11-12 DATE

6-4-12
PLANS APPROVAL DATE

REGISTERED PROFESSIONAL ENGINEER Florante P. Perez No. 41030 Exp. 3-31-13 CIVIL STATE OF CALIFORNIA

THE STATE OF CALIFORNIA OR ITS OFFICERS OR AGENTS SHALL NOT BE RESPONSIBLE FOR THE ACCURACY OR COMPLETENESS OF SCANNED COPIES OF THIS PLAN SHEET.

STATIONARY MOUNTED CONSTRUCTION AREA SIGNS

SHEET No.	SIGN	CODE	SIGN MESSAGE	PANEL SIZE (INCH x INCH)	No. OF POSTS AND SIZE (EA-INCH x INCH)	No. OF SIGNS	REMARKS
CS-2 TO CS-35	B27	M4-8	DETOUR	24 x 12	1 - 4 x 6	17	
		G27-2(CA)	ROUTE 80 SHIELD	21 x 18			
		M3-2	EAST	21 x 15			
		M6-1(↑)	UP ARROW	24 x 12			
	B28	SPECIAL	CENTRAL Ave EXIT CLOSED USE ALBANY EXIT	66 x 42	2 - 4 x 6	1	
	B29	SC3(↑)(CA)	DETOUR UP ARROW	48 x 18	1 - 4 x 6	2	
		SPECIAL	TO CENTRAL Ave	52 x 24			
	B30	SC3(↗)(CA)	DETOUR UP RIGHT ARROW	48 x 18	1 - 4 x 6	2	
		SPECIAL	TO CENTRAL Ave	52 x 24			
	B31	M4-10R	DETOUR RIGHT	48 x 18	1 - 4 x 6	2	
		SPECIAL	TO CENTRAL Ave	52 x 24			
	B32	M4-8	DETOUR	24 x 12	1 - 4 x 6	6	
		G27-2(CA)	ROUTE 80 SHIELD	21 x 18			
		M3-4	WEST	21 x 15			
		M6-1(→)	RIGHT ARROW	24 x 12			
	B33	M4-8	DETOUR	24 x 12	1 - 4 x 6	10	
		G27-2(CA)	ROUTE 80 SHIELD	21 x 18			
		M3-4	WEST	21 x 15			
		M6-1(↑)	UP ARROW	24 x 12			
	B34	M4-8	DETOUR	24 x 12	1 - 4 x 6	4	
		G27-2(CA)	ROUTE 80 SHIELD	21 x 18			
		M3-4	WEST	21 x 15			
		M6-1(←)	LEFT ARROW	24 x 12			
	B35	M4-8	DETOUR	24 x 12	1 - 4 x 6	1	
		G27-2(CA)	ROUTE 80 SHIELD	21 x 18			
		M3-4	WEST	21 x 15			
		M6-2(↖)	UP LEFT ARROW	24 x 12			
	B36	M4-8	DETOUR	24 x 12	1 - 4 x 6	2	
		G27-2(CA)	ROUTE 80 SHIELD	21 x 18			
		M3-4	WEST	21 x 15			
		M6-2(↗)	UP RIGHT ARROW	24 x 12			
	B37	SPECIAL	BAYVIEW Ave EXIT CLOSED	48 x 34	1 - 4 x 6	1	
	B38	SC3(↑)(CA)	DETOUR UP ARROW	48 x 18	1 - 4 x 6	2	
		SPECIAL	TO BAYVIEW Ave	52 x 24			
	B39	SC3(↗)(CA)	DETOUR UP RIGHT ARROW	48 x 18	1 - 4 x 6	1	
		SPECIAL	TO BAYVIEW Ave	52 x 24			
	B40	M4-10R	DETOUR RIGHT	48 x 18	1 - 4 x 6	1	
		SPECIAL	TO BAYVIEW Ave	52 x 24			
	B41	M4-10R	DETOUR LEFT	48 x 18	1 - 4 x 6	1	
		SPECIAL	TO BAYVIEW Ave	52 x 24			

STATIONARY MOUNTED CONSTRUCTION AREA SIGNS

SHEET No.	SIGN	CODE	SIGN MESSAGE	PANEL SIZE (INCH x INCH)	No. OF POSTS AND SIZE (EA-INCH x INCH)	No. OF SIGNS	REMARKS
CS-2 TO CS-35	B42	SPECIAL	HARBOUR Wy NORTH EXIT CLOSED	66 x 42	2 - 4 x 6	1	
	B43	SC3(↑)(CA)	DETOUR UP ARROW	48 x 18	1 - 4 x 6	3	
		SPECIAL	TO HARBOUR Wy NORTH	52 x 24			
	B44	SC3(↗)(CA)	DETOUR UP RIGHT ARROW	48 x 18	1 - 4 x 6	2	
		SPECIAL	TO HARBOUR Wy NORTH	52 x 24			
	B45	M4-10L	DETOUR LEFT	48 x 18	1 - 4 x 6	2	
		SPECIAL	TO HARBOUR Wy NORTH	52 x 24			
	B46	SPECIAL	17th St EXIT RAMP CLOSED	52 x 36	1 - 4 x 6	1	
	B47	SC3(↑)(CA)	DETOUR UP ARROW	48 x 18	1 - 4 x 6	2	
		SPECIAL	TO 17th St	48 x 16			
	B48	SC3(↗)(CA)	DETOUR UP RIGHT ARROW	48 x 18	1 - 4 x 6	4	
		SPECIAL	TO 17th St	48 x 16			
	B49	M4-10R	DETOUR RIGHT	48 x 18	1 - 4 x 6	1	
		SPECIAL	TO 17th St	48 x 16			
	B50	M4-10L	DETOUR LEFT	48 x 18	1 - 4 x 6	1	
		SPECIAL	TO 17th St	48 x 16			
	B51	M4-10L	DETOUR LEFT	48 x 18	1 - 4 x 6	1	
		SPECIAL	TO CENTRAL Ave	52 x 24			
THD-1 TO THD-6	C-1	C30A	SHOULDER CLOSED	48 x 48	1 - 4 x 6	125	
	C-2	C19(CA)(MOD)	SHOULDER CLOSED AHEAD	48 x 48	1 - 4 x 6	1	
	C-3	W21-5bR	RIGHT SHOULDER CLOSED AHEAD	48 x 48	1 - 4 x 6	76	
	C-4	W21-5bL	LEFT SHOULDER CLOSED AHEAD	48 x 48	1 - 4 x 6	42	
	C-5	W21-5bR	RIGHT SHOULDER CLOSED AHEAD	48 x 48	1 - 4 x 6	1	
	C-6	W21-5bL	LEFT SHOULDER CLOSED AHEAD	48 x 48	1 - 4 x 6	3	

CONSTRUCTION AREA SIGNS

NO SCALE

CS-39

STATE OF CALIFORNIA - DEPARTMENT OF TRANSPORTATION
Caltrans
TRAFFIC

FUNCTIONAL SUPERVISOR: LOURDES DAVID
CALCULATED-DESIGNED BY: LEOPOLDO G. BONGATO/ CLAUDIA FANG
CHECKED BY: FLORANTE P. PEREZ
REVISED BY
DATE REVISED

LAST REVISION 04-16-12
DATE PLOTTED => 04-JUN-2012
TIME PLOTTED => 16:50

Dist	COUNTY	ROUTE	POST MILES TOTAL PROJECT	SHEET No.	TOTAL SHEETS
04	Ala,CC	4,80,84, 92,238,etc.	Var	84	141

Paul Snyder 4-11-12
REGISTERED CIVIL ENGINEER DATE

6-4-12
PLANS APPROVAL DATE

REGISTERED PROFESSIONAL ENGINEER
Paul Alan Snyder
No. 41128
Exp. 3-31-13
CIVIL
STATE OF CALIFORNIA

THE STATE OF CALIFORNIA OR ITS OFFICERS OR AGENTS SHALL NOT BE RESPONSIBLE FOR THE ACCURACY OR COMPLETENESS OF SCANNED COPIES OF THIS PLAN SHEET.

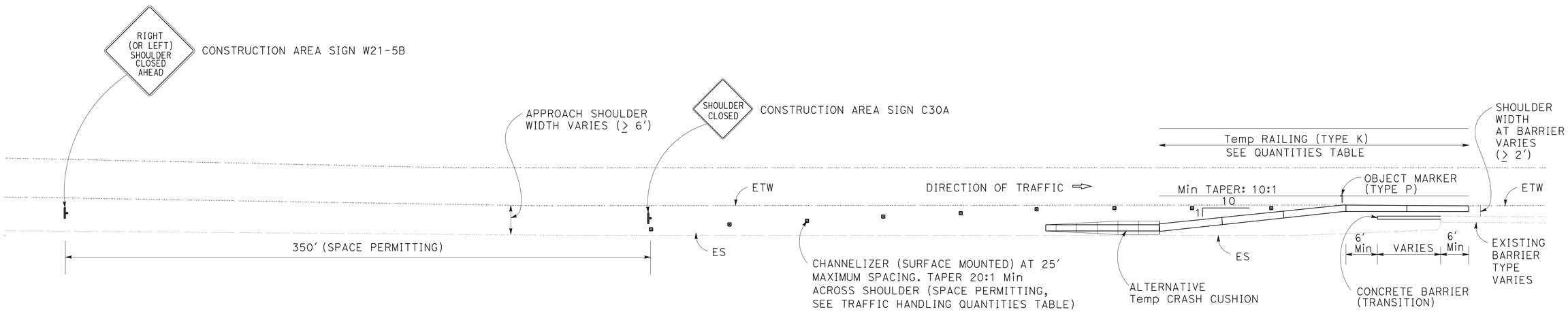

LOCATION LAYOUT CASE 2

APPROACH SHOULDER WIDTH ≥ 6′
TRAILING SHOULDER WIDTH AT BARRIER ≥ 2′

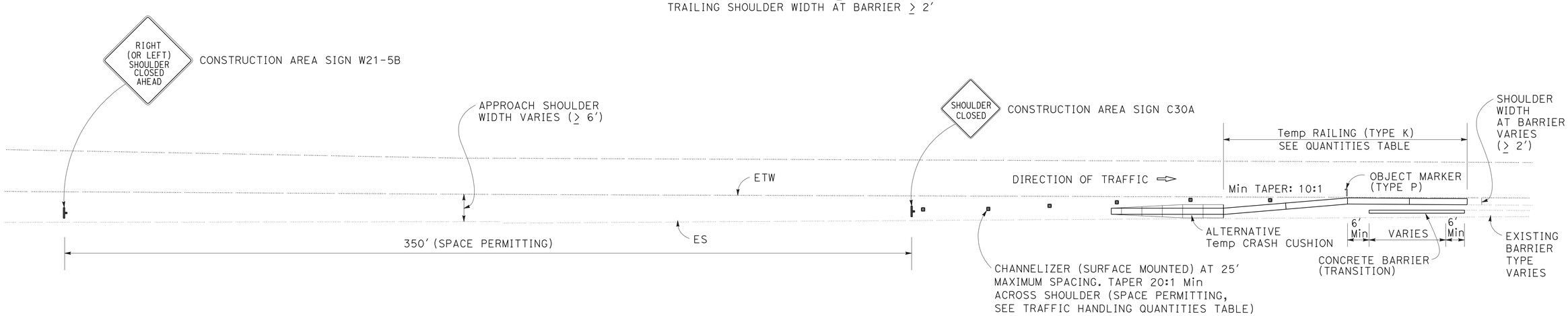

LOCATION LAYOUT CASE 2

APPROACH SHOULDER WIDTH ≤ 6′
TRAILING SHOULDER WIDTH AT BARRIER ≥ 2′

TRAFFIC HANDLING DETAILS

NO SCALE

THD-1

REVISED BY	DATE REVISED
-	-
-	-

CALCULATED-DESIGNED BY
CHECKED BY
FUNCTIONAL SUPERVISOR
ALBERT J. ZEPEDA

STATE OF CALIFORNIA - DEPARTMENT OF TRANSPORTATION
Caltrans
DESIGN

LAST REVISION 04-16-12 | DATE PLOTTED => 04-JUN-2012 | TIME PLOTTED => 15:14

Dist	COUNTY	ROUTE	POST MILES TOTAL PROJECT	SHEET No.	TOTAL SHEETS
04	Ala,CC	4,80,84, 92,238,etc.	Var	85	141

Paul Snyder 4-11-12
REGISTERED CIVIL ENGINEER DATE

6-4-12
PLANS APPROVAL DATE

REGISTERED PROFESSIONAL ENGINEER
Paul Alan Snyder
No. 41128
Exp. 3-31-13
CIVIL
STATE OF CALIFORNIA

THE STATE OF CALIFORNIA OR ITS OFFICERS OR AGENTS SHALL NOT BE RESPONSIBLE FOR THE ACCURACY OR COMPLETENESS OF SCANNED COPIES OF THIS PLAN SHEET.

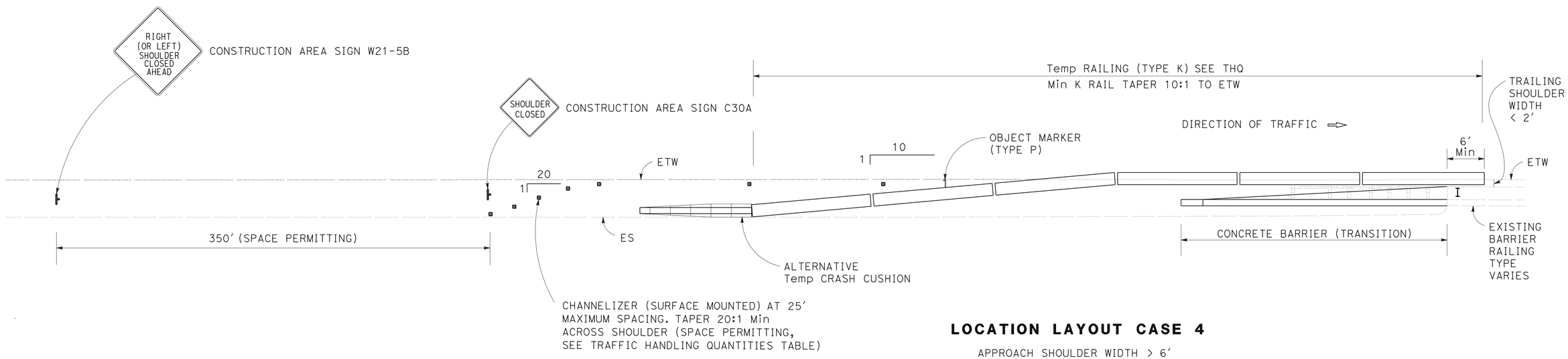

LOCATION LAYOUT CASE 4

APPROACH SHOULDER WIDTH > 6'
TRAILING SHOULDER WIDTH < 2'

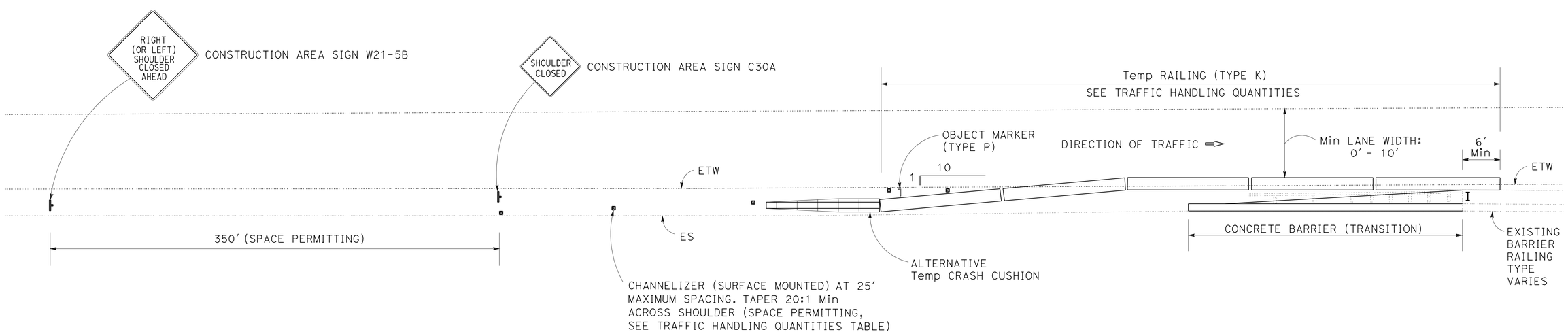

LOCATION LAYOUT CASE 3

APPROACH SHOULDER WIDTH < 6'
TRAILING SHOULDER WIDTH < 2'

TRAFFIC HANDLING DETAILS

NO SCALE

THD-2

REVISED BY	DATE REVISED
-	-
-	-

CALCULATED-DESIGNED BY
CHECKED BY
FUNCTIONAL SUPERVISOR
ALBERT J. ZEPEDA

STATE OF CALIFORNIA - DEPARTMENT OF TRANSPORTATION
Caltrans
DESIGN

LAST REVISION 04-16-12
DATE PLOTTED => 04-JUN-2012
TIME PLOTTED => 15:14

Dist	COUNTY	ROUTE	POST MILES TOTAL PROJECT	SHEET No.	TOTAL SHEETS
04	Ala,CC	4,80,84, 92,238,etc.	Var	86	141

Paul Snyder 4-11-12
REGISTERED CIVIL ENGINEER DATE

6-4-12
PLANS APPROVAL DATE

REGISTERED PROFESSIONAL ENGINEER
Paul Alan Snyder
No. 41128
Exp. 3-31-13
CIVIL
STATE OF CALIFORNIA

THE STATE OF CALIFORNIA OR ITS OFFICERS OR AGENTS SHALL NOT BE RESPONSIBLE FOR THE ACCURACY OR COMPLETENESS OF SCANNED COPIES OF THIS PLAN SHEET.

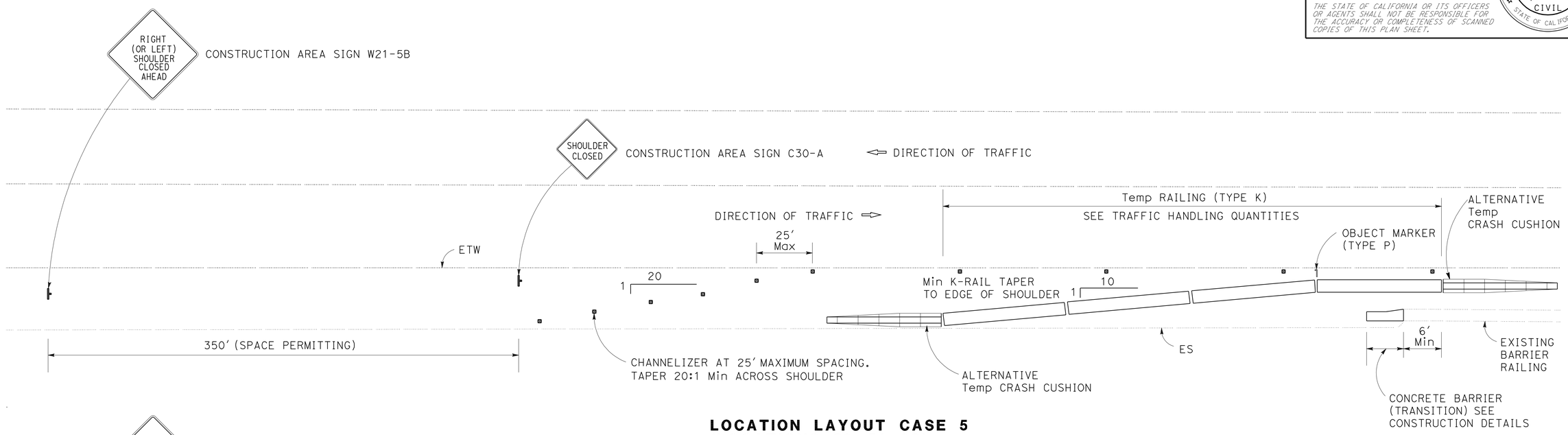

LOCATION LAYOUT CASE 5
(LOCATIONS 39, 51, 92)

TWO WAY TRAFFIC < 45 MPH
APPROACH AND TRAILING SHOULDER WIDTH > 6′

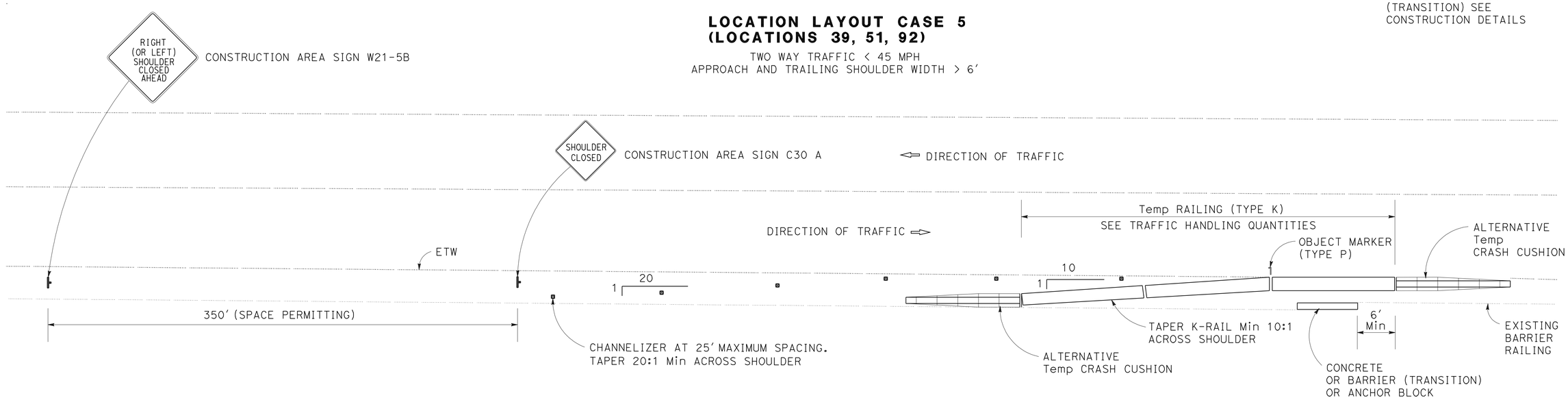

LOCATION LAYOUT CASE 6
(LOCATIONS 34, 35, 36, 37)

TWO WAY TRAFFIC
APPROACH AND TRAILING SHOULDER WIDTH < 6′

TRAFFIC HANDLING DETAILS

NO SCALE

THD-3

REVISED BY | DATE REVISED
CALCULATED-DESIGNED BY | CHECKED BY
FUNCTIONAL SUPERVISOR: ALBERT J. ZEPEDA

STATE OF CALIFORNIA - DEPARTMENT OF TRANSPORTATION
Caltrans®
DESIGN

LAST REVISION 04-16-12 | DATE PLOTTED => 04-JUN-2012 | TIME PLOTTED => 15:14

Dist	COUNTY	ROUTE	POST MILES TOTAL PROJECT	SHEET No.	TOTAL SHEETS
04	Ala,CC	4,80,84, 92,238,etc.	Var	87	141

Paul Snyder 4-11-12
REGISTERED CIVIL ENGINEER DATE

6-4-12
PLANS APPROVAL DATE

REGISTERED PROFESSIONAL ENGINEER
Paul Alan Snyder
No. 41128
Exp. 3-31-13
CIVIL
STATE OF CALIFORNIA

THE STATE OF CALIFORNIA OR ITS OFFICERS OR AGENTS SHALL NOT BE RESPONSIBLE FOR THE ACCURACY OR COMPLETENESS OF SCANNED COPIES OF THIS PLAN SHEET.

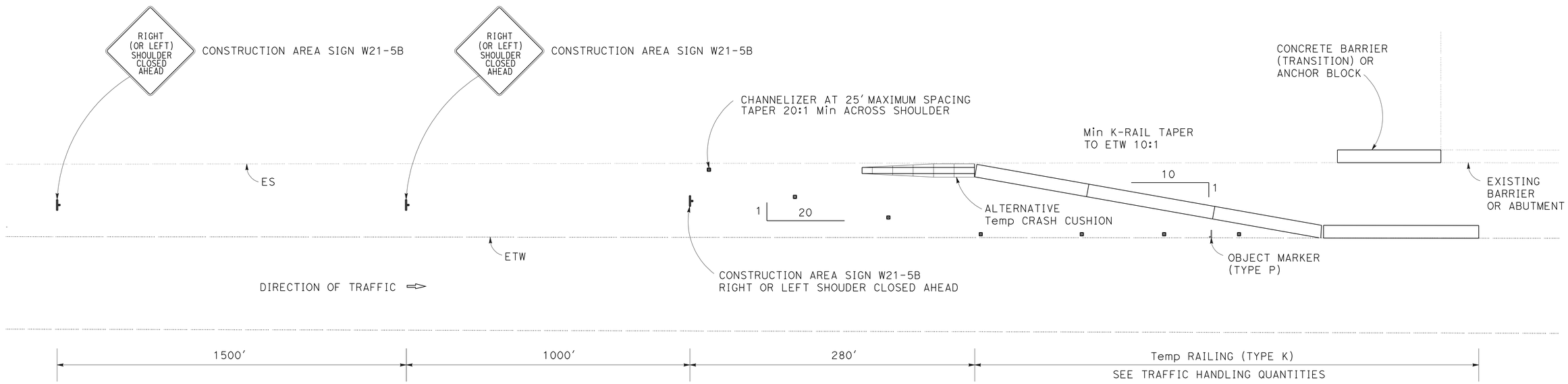

LOCATION LAYOUT CASE 7
LOC 41A, 65A, 73 (1)
LOC 88 SIMILAR BUT ON
RIGHT SIDE OF FREEWAY

TRAFFIC HANDLING DETAILS

NO SCALE

THD-4

REVISED BY	DATE REVISED
-	-
-	-

CALCULATED-DESIGNED BY
CHECKED BY

FUNCTIONAL SUPERVISOR
ALBERT J. ZEPEDA

STATE OF CALIFORNIA - DEPARTMENT OF TRANSPORTATION
Caltrans
DESIGN

LAST REVISION 04-16-12
DATE PLOTTED => 04-JUN-2012
TIME PLOTTED => 15:14

Dist	COUNTY	ROUTE	POST MILES TOTAL PROJECT	SHEET No.	TOTAL SHEETS
04	Ala,CC	4,80,84, 92,238,etc.	Var	88	141

Paul Snyder 4-11-12
REGISTERED CIVIL ENGINEER DATE

6-4-12
PLANS APPROVAL DATE

REGISTERED PROFESSIONAL ENGINEER
Paul Alan Snyder
No. 41128
Exp. 3-31-13
CIVIL
STATE OF CALIFORNIA

THE STATE OF CALIFORNIA OR ITS OFFICERS OR AGENTS SHALL NOT BE RESPONSIBLE FOR THE ACCURACY OR COMPLETENESS OF SCANNED COPIES OF THIS PLAN SHEET.

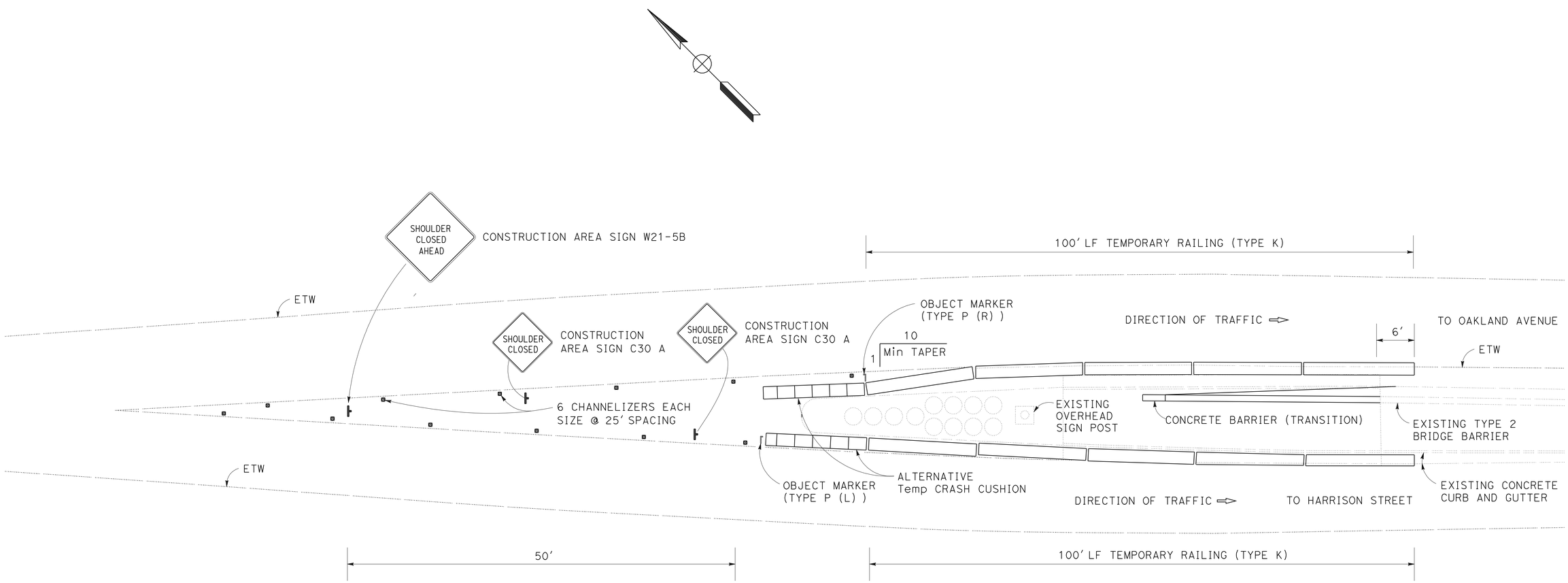

TRAFFIC HANDLING PLAN AT LOCATION 82 (2)
EB ROUTE 580 OFF-RAMP TO OAKLAND AVENUE

TRAFFIC HANDLING DETAILS

NO SCALE

THD-5

REVISED BY	DATE REVISED
-	-

CALCULATED-DESIGNED BY	CHECKED BY
-	-

FUNCTIONAL SUPERVISOR: ALBERT J. ZEPEDA

STATE OF CALIFORNIA - DEPARTMENT OF TRANSPORTATION
Caltrans®
DESIGN

LAST REVISION 04-16-12 | DATE PLOTTED => 04-JUN-2012 | TIME PLOTTED => 15:14

Dist	COUNTY	ROUTE	POST MILES TOTAL PROJECT	SHEET No.	TOTAL SHEETS
04	Ala,CC	4,80,84, 92,238,etc.	Var	89	141

Paul Snyder 4-11-12
REGISTERED CIVIL ENGINEER DATE

6-4-12
PLANS APPROVAL DATE

REGISTERED PROFESSIONAL ENGINEER
Paul Alan Snyder
No. 41128
Exp. 3-31-13
CIVIL
STATE OF CALIFORNIA

THE STATE OF CALIFORNIA OR ITS OFFICERS OR AGENTS SHALL NOT BE RESPONSIBLE FOR THE ACCURACY OR COMPLETENESS OF SCANNED COPIES OF THIS PLAN SHEET.

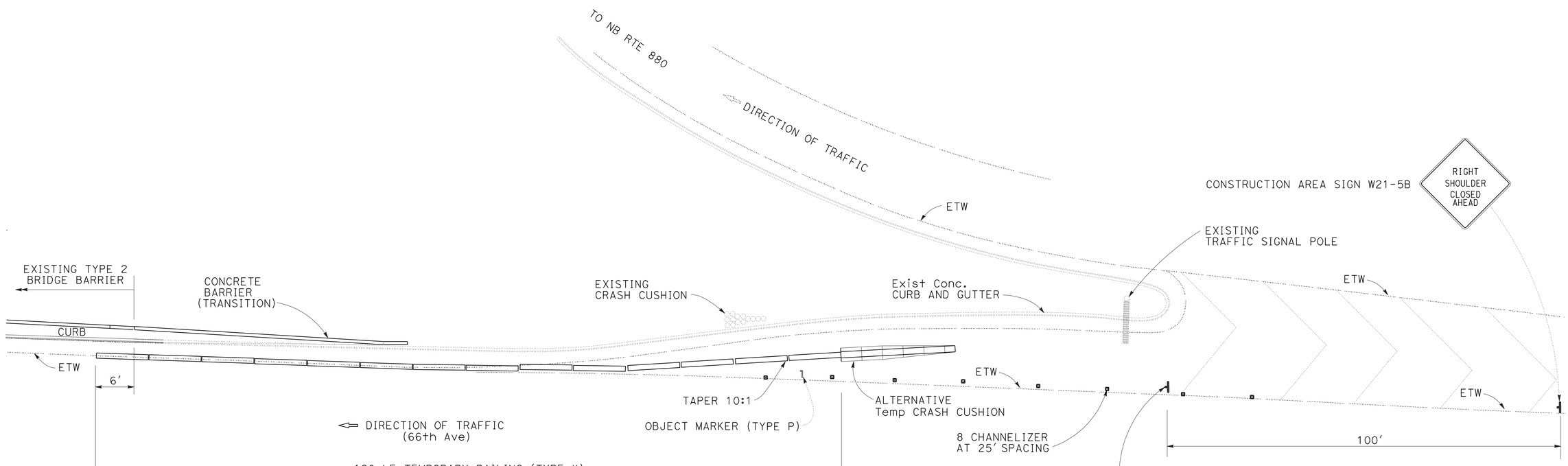

TRAFFIC HANDLING PLAN
AT LOC 165 (2)
NB ROUTE 880 ON-RAMP FROM WB 66th Ave. IN OAKLAND

TRAFFIC HANDLING DETAILS

NO SCALE

THD-6

REVISED BY	DATE REVISED
-	-
-	-

CALCULATED-DESIGNED BY
CHECKED BY

FUNCTIONAL SUPERVISOR
ALBERT J. ZEPEDA

STATE OF CALIFORNIA - DEPARTMENT OF TRANSPORTATION
Caltrans
DESIGN

LAST REVISION 04-16-12
DATE PLOTTED => 04-JUN-2012
TIME PLOTTED => 15:15

Dist	COUNTY	ROUTE	POST MILES TOTAL PROJECT	SHEET No.	TOTAL SHEETS
04	Ala,CC	4,80,84, 92,238,etc.	Var	90	141

Paul Snyder 4-11-12
REGISTERED CIVIL ENGINEER DATE

6-4-12
PLANS APPROVAL DATE

REGISTERED PROFESSIONAL ENGINEER Paul Alan Snyder No. 41128 Exp. 3-31-13 CIVIL STATE OF CALIFORNIA

THE STATE OF CALIFORNIA OR ITS OFFICERS OR AGENTS SHALL NOT BE RESPONSIBLE FOR THE ACCURACY OR COMPLETENESS OF SCANNED COPIES OF THIS PLAN SHEET.

TRAFFIC HANDLING QUANTITIES

PROJECT WORK LOCATIONS: LOCATION No.	COUNTY	ROUTE	POST MILE: PREFIX	POST MILE: POST MILE	SIDE	TRAFFIC HANDLING CASE	TEMPORARY RAILING (TYPE K)	CHANNELIZER	ALTERNATIVE TEMPORARY CRASH CUSHION	CONSTRUCTION AREA SIGNS: SHOULDER CLOSED C30A	SHOULDER CLOSED AHEAD C30A	RIGHT SHOULDER CLOSED AHEAD W21-5bR	LEFT SHOULDER CLOSED AHEAD W21-5bL	RIGHT SHOULDER CLOSED 1000 F+ W21-5bR	LEFT SHOULDER CLOSED 1000 F+ W21-5bL	OBJECT MARKER (TYPE P) (FOR RIGHT SIDE)	OBJECT MARKER (TYPE P) (FOR LEFT SIDE)
							LF	EA								[N]	
3	CC	4	R	8.449	R+	3	60	5	1	1		1				1	
5(2)	CC	4	R	13.637	R+	1	100	11	1	1		1				1	
10(1)	CC	4	R	19.877	R+	1	120	15	1	1		1				1	
10(2)	CC	4	R	19.877	R+	1	80	10	1	1		1				1	
11(1)	CC	4	R	19.950	R+	2	60	3	1	1		**				1	
11(2)	CC	4	R	19.950	L+	2	60	3	1	1			1				1
12(2)	CC	4	R	20.294	R+	1	80	11	1	1		**				1	
16(1)	Ala	80		5.704	L+	3	20	2	1	1			1				1
16(2)	Ala	80		5.704	R+	1	80	10	1	1		1				1	
17	Ala	80		5.670	R+	1	100	12	1	1		1				1	
18	Ala	80		7.107	L+	1	100	12	1	1			1				1
19	CC	80		0.101	R+	1	80	11	1	1		1				1	
20	CC	80		0.137	R+	1	80	9	1	1		1				1	
22	CC	80		2.716	R+	1	100	13	1	1		1				1	1
23	CC	80		4.583	L+	2	40	5	1	1			1				
25	CC	80		6.856	R+	2	40	5	1	1		1				1	
27	CC	80		8.397	R+	1	80	11	1	1		1				1	
28	CC	80		9.850	R+	1	100	12	1	1		1				1	
28A(1)	CC	80		10.040	L+	3	20	2	1	1			1			1	
28A(2)	CC	80		10.040	R+	1	80	10	1	1		1				1	
32	Ala	84	R	3.747	R+	1	80	10	1	1		1				1	
34(1)	Ala	84		10.633	R+	6	40	4	2	1		1				1	
34(2)	Ala	84		10.633	R+	6	40	6	2	1		1				1	
35(1)	Ala	84		10.633	L+	6	40	6	2	1			1				1
35(2)	Ala	84		10.633	L+	6	40	4	2	1			1				1
36(1)	Ala	84		10.713	R+	6	40	4	2	1		1				1	
36(2)	Ala	84		10.713	R+	6	40	5	2	1		1				1	
37(1)	Ala	84		10.713	L+	6	40	4	2	1			1				1
37(2)	Ala	84		10.713	L+	6	40	4	2	1			1				1
39	Ala	92		4.470	R+	5	100	10	2	1			1			1	
40	Ala	92		5.001	R+	1	80	11	1	1			1			1	
41	Ala	238		2.192	R+	1	120	12	1	1		1				1	

[N] NOT A SEPARATE PAY ITEM, FOR INFORMATION ONLY.

TRAFFIC HANDLING QUANTITIES

PROJECT WORK LOCATIONS: LOCATION No.	COUNTY	ROUTE	POST MILE: PREFIX	POST MILE: POST MILE	SIDE	TRAFFIC HANDLING CASE	TEMPORARY RAILING (TYPE K)	CHANNELIZER	ALTERNATIVE TEMPORARY CRASH CUSHION	CONSTRUCTION AREA SIGNS: SHOULDER CLOSED C30A	SHOULDER CLOSED AHEAD C30A	RIGHT SHOULDER CLOSED AHEAD W21-5bR	LEFT SHOULDER CLOSED AHEAD W21-5bL	RIGHT SHOULDER CLOSED 1000 F+ W21-5bR	LEFT SHOULDER CLOSED 1000 F+ W21-5bL	OBJECT MARKER (TYPE P) (FOR RIGHT SIDE)	OBJECT MARKER (TYPE P) (FOR LEFT SIDE)
							LF	EA								[N]	
41A	Ala	238	R	14.033	L+	1	80	10	2	1			1		1		1
41B	Ala	238	R	14.470	R+	1	120	21	1	1		1				1	
42(2)	CC	242	R	1.457	R+	1	80	10	1	1		1				1	
42(3)	CC	242	R	1.457	L+	1	60	7	1	1			1				1
43(1)	CC	242	R	1.499	L+	1	80	6	1	1			1				1
43(2)	CC	242	R	1.499	R+	1	80	10	1	1		1				1	
43(3)	CC	242	R	1.499	L+	1	80	10	1	1			1				1
43A(1)	CC	242	R	1.665	L+	2	40	5	1	1			1				1
43A(2)	CC	242	R	1.665	R+	2	60	6	1	1		**				1	
44	CC	242	R	2.046	R+	2	80	6	1	1		**				1	
46	CC	242	R	2.625	R+	1	60	8	1	1		1				1	
48	Ala	260	R	0.983	L+	2	40	5	1	1			1				1
51(1)	Ala	580	R	5.933	R+	5	120	10	2	1		1				1	
51(2)	Ala	580	R	5.933	R+	5	120	10	2	1		1				1	
51(3)	Ala	580	R	5.933	L+	5	120	10	2	1			1				1
51(4)	Ala	580	R	5.933	L+	5	120	10	2	1			1				1
58	Ala	580		19.851	L+	1	60	7	1	1		**					1
59	Ala	580		19.871	L+	2	40	5	1	1		1					1
60	Ala	580		20.591	R+	1	120	10	1	1		1				1	
63(2)	Ala	580	R	28.360	R+	1	80	10	1	1		1				1	
64	Ala	580	R	29.530	R+	1	80	9	1	1		1				1	
65	Ala	580	M	31.028	R+	1	120	21	1	1		1				1	
65A	Ala	580	M	31.029	L+	1	80	8	1	1			1		1		1
71	Ala	580	R	37.621	R+	1	80	10	1	1		1				1	
73(1)	Ala	580	R	39.061	L+	1	100	22	1	1			1		1		1
74	Ala	580	R	39.281	R+	2	60	3	1	1		1				1	
75	Ala	580	R	40.971	R+	1	120	10	1	1		1				1	
76(2)	Ala	580	R	41.731	R+	1	80	10	1	1		1					
77(1)	Ala	580	R	42.031	L+	3	60	3	1	1			1				1
77(2)	Ala	580	R	42.031	R+	1	80	10	1	1		1				1	
78(2)	Ala	580		42.901	R+	1	80	10	1	1		1				1	
80	Ala	580		44.307	R+	2	60	3	1	1		**				1	
81(1)	Ala	580		44.308	L+	2	60	3	1	1			1				1
82(1)	Ala	580		44.433	L+	2	60	3	1	1			1				1
82(2)	Ala	580		44.433	L+,Mid	7	100	12	2	1	1					1	1

TRAFFIC HANDLING QUANTITIES

APPROVED FOR TRAFFIC HANDLING WORK ONLY

THQ-1

STATE OF CALIFORNIA - DEPARTMENT OF TRANSPORTATION
Caltrans® DESIGN

FUNCTIONAL SUPERVISOR: ALBERT J. ZEPEDA

CALCULATED-DESIGNED BY | CHECKED BY | REVISED BY | DATE REVISED

LAST REVISION 04-16-12 | DATE PLOTTED => | TIME PLOTTED => 08:25

Dist	COUNTY	ROUTE	POST MILES TOTAL PROJECT	SHEET No.	TOTAL SHEETS
04	Ala,CC	4,80,84, 92,238,etc.	Var	91	141

REGISTERED CIVIL ENGINEER 4-11-12 DATE

6-4-12
PLANS APPROVAL DATE

REGISTERED PROFESSIONAL ENGINEER Paul Alan Snyder No. 41128 Exp. 3-31-13 CIVIL STATE OF CALIFORNIA

THE STATE OF CALIFORNIA OR ITS OFFICERS OR AGENTS SHALL NOT BE RESPONSIBLE FOR THE ACCURACY OR COMPLETENESS OF SCANNED COPIES OF THIS PLAN SHEET.

TRAFFIC HANDLING QUANTITIES

PROJECT WORK LOCATIONS						TRAFFIC HANDLING CASE	TEMPORARY RAILING (TYPE K)	CHANNELIZER	ALTERNATIVE TEMPORARY CRASH CUSHION	CONSTRUCTION AREA SIGNS						OBJECT MARKER (TYPE P) (FOR RIGHT SIDE)	OBJECT MARKER (TYPE P) (FOR LEFT SIDE)
LOCATION No.	COUNTY	ROUTE	POST MILE PREFIX	POST MILE POST MILE	SIDE					SHOULDER CLOSED C30A	SHOULDER CLOSED AHEAD C30A	RIGHT SHOULDER CLOSED AHEAD W21-5bR	LEFT SHOULDER CLOSED AHEAD W21-5bL	RIGHT SHOULDER CLOSED 1000 F+ W21-5bR	LEFT SHOULDER CLOSED 1000 F+ W21-5bL		
							LF	EA								[N]	
83	CC	580	R	0.086	R+	1	100	14		1		1				1	
85(1)	CC	580	R	1.000	L+	2	80	5	1	1			1				1
85(2)	CC	580	R	1.000	R+	1	80	10	1	1		1				1	
88	CC	580	R	4.504	R+	1	100	12	1	1		1		1		1	
89	CC	580	R	5.128	R+	1	80	10	1	1		1				1	
90	CC	580	R	5.504	R+	1	100	14	1	1		1				1	
92	Ala	680	R	8.312	R+	5	100	11	2	1			1			1	
93(1)	Ala	680	R	15.251	L+	3	60	3	1	1				1			
93(2)	Ala	680	R	15.251	R+	1	80	10	1	1			1			1	1
94	Ala	680	R	18.396	R+	5	80	11	2	1			1			1	
95(2)	Ala	680	R	19.041	L+	2	60	6	1	1			1				1
95(3)	Ala	680	R	19.041	R+	1	80	10	1	1		1				1	
96(1)	Ala	680	R	19.261	L+	2	40	5	1	1			1				1
96(2)	Ala	680	R	19.261	R+	1	80	10	1	1		1				1	
98	Ala	680	R	19.300	R+	2	120	5	1	1		1				1	
100	CC	680	R	2.885	R+	1	120	10	1	1		1				1	
101	CC	680	R	3.765	R+	2	100	6	1	1		1				1	
102	CC	680	R	4.182	R+	2	80	3	1	1		1				1	
103	CC	680	R	4.182	R+	3	120	3	1	1		1				1	
104	CC	680	R	4.464	R+	1	120	9	1	1		1				1	
106	CC	680	R	13.693	R+	1	80	10	1	1		1				1	
108	CC	680	R	15.639	R+	1	80	10	1	1		1				1	
109	CC	680	R	15.883	R+	1	80	11	1	1		1				1	
110	CC	680	R	16.171	L+	1	80	10	1	1			1				1
111	CC	680	R	16.706	L+	1	60	8	1	1			1				1
113	CC	680	R	19.094	R+	1	80	9	1	1		1				1	
114	CC	680	R	19.183	R+	2	40	4	1	1		1				1	
115(2)	CC	680	R	22.283	R+	1	120	10	1	1		1				1	
115(3)	CC	680	R	22.283	L+	3	60	2	1	1			1				1
117(2)	Ala	880		3.181	R+	1	60	8	1	1		1				1	
119	Ala	880		3.191	R+	1	80	10	1	1		1				1	
120	Ala	880		3.240	L+	1	60	7	1	1			1				1
125	Ala	880		4.714	R+	1	140	10	1	1		1				1	
127	Ala	880		6.444	R+	1	100	12	1	1		1				1	

[N] NOT A SEPARATE PAY ITEM, FOR INFORMATION ONLY.

TRAFFIC HANDLING QUANTITIES

PROJECT WORK LOCATIONS						TRAFFIC HANDLING CASE	TEMPORARY RAILING (TYPE K)	CHANNELIZER	ALTERNATIVE TEMPORARY CRASH CUSHION	CONSTRUCTION AREA SIGNS						OBJECT MARKER (TYPE P) (FOR RIGHT SIDE)	OBJECT MARKER (TYPE P) (FOR LEFT SIDE)
LOCATION No.	COUNTY	ROUTE	POST MILE PREFIX	POST MILE POST MILE	SIDE					SHOULDER CLOSED C30A	SHOULDER CLOSED AHEAD C30A	RIGHT SHOULDER CLOSED AHEAD W21-5bR	LEFT SHOULDER CLOSED AHEAD W21-5bL	RIGHT SHOULDER CLOSED 1000 F+ W21-5bR	LEFT SHOULDER CLOSED 1000 F+ W21-5bL		
							LF	EA								[N]	
133	Ala	880		10.150	R+	1	80	11	1	1		1				1	
135	Ala	880		12.871	L+	2	40	5	1	1			1				1
136(1)	Ala	880		13.240	L+	2	40	5	1	1			1				1
136(2)	Ala	880		13.240	R+	1	80	10	1	1		1				1	
138	Ala	880		13.724	L+	2	60	6	1	1			1				1
139	Ala	880		13.765	R+	1	80	10	1	1		1				1	
141	Ala	880		15.549	R+	1	80	9	1	1		1				1	
142	Ala	880		15.748	R+	1	80	10	1	1		1				1	
145	Ala	880		18.228	L+	1	80	9	1	1			1				1
146	Ala	880		18.482	L+	1	60	7	1	1			1				1
148	Ala	880		20.686	L+	2	60	6	1	1			1				1
149	Ala	880		20.818	R+	2	60	3	1	1		1				1	
154	Ala	880		21.556	R+	2	20	3	1	1		1				1	
155	Ala	880		22.837	R+	1	160	11	1	1		1				1	
157	Ala	880		22.946	R+	1	100	12	1	1		1				1	
159	Ala	880		24.731	L+	1	60	7	1	1			1				1
162(1)	Ala	880		26.481	L+	3	60	3	1	1			1				1
162(2)	Ala	880		26.481	R+	4	100	5	1	1		1				1	
163(1)	Ala	880		26.482	L+	3	60	3	1	1			1				1
163(2)	Ala	880		26.482	R+	4	80	4	1	1		1				1	
164	Ala	880		26.581	R+	1	80	11	1	1		1				1	
165(2)	Ala	880		26.701	R+	8	120	8	1	1		1				1	
166(1)	Ala	880		29.101	L+	2		5	1	1			1				1
166(2)	Ala	880		29.101	R+	1	80	10	1	1		1				1	
SUBTOTAL										125	1	76	42	1	3		
TOTAL							9760	1013	141	*	*	*	*	*	*	83	42

* SEE CONSTRUCTION AREA SIGN SHEETS CS-36 THROUGH CS-39 FOR PROJECT TOTALS

** INSUFFICENT SPACE FOR ADVANCE WARNING SIGNS

TRAFFIC HANDLING QUANTITIES

APPROVED FOR TRAFFIC HANDLING WORK ONLY

THQ-2

STATE OF CALIFORNIA - DEPARTMENT OF TRANSPORTATION
Caltrans® DESIGN

FUNCTIONAL SUPERVISOR: ALBERT J. ZEPEDA

CALCULATED-DESIGNED BY | CHECKED BY | REVISED BY | DATE REVISED

LAST REVISION 04-16-12 | DATE PLOTTED => 04-JUN-2012 | TIME PLOTTED => 15:32

Dist	COUNTY	ROUTE	POST MILES TOTAL PROJECT	SHEET No.	TOTAL SHEETS
04	Ala,CC	4,80,84, 92,238,etc.	Var	92	141

Paul Snyder 4-11-12
REGISTERED CIVIL ENGINEER DATE

6-4-12
PLANS APPROVAL DATE

REGISTERED PROFESSIONAL ENGINEER Paul Alan Snyder No. 41128 Exp. 3-31-13 CIVIL STATE OF CALIFORNIA

THE STATE OF CALIFORNIA OR ITS OFFICERS OR AGENTS SHALL NOT BE RESPONSIBLE FOR THE ACCURACY OR COMPLETENESS OF SCANNED COPIES OF THIS PLAN SHEET.

ROADWAY QUANTITIES

PROJECT WORK LOCATIONS: LOCATION No. ****	COUNTY	ROUTE	PREFIX	POST MILE	Std PLAN MBGR LAYOUT TYPE	LAYOUT DETAIL No. OR CONSTRUCTION DETAIL SHT	REMOVE MARKER	REMOVE METAL BEAM GUARD RAILING	REMOVE ASPHALT CONCRETE DIKE	RESET ROADSIDE SIGN	REMOVE TERMINAL SECTION	REMOVE CONCRETE (CURB AND GUTTER) ***	ROADWAY EXCAVATION ***	HOT MIX ASPHALT (TYPE A) ***	PLACE HOT MIX ASPHALT DIKE (TYPE C)	PLACE HOT MIX ASPHALT DIKE (TYPE F)	CONCRETE BARRIER (TRANSITION) *	TYPE OF CONNECTION TO EXISTING BARRIER **	GUARD RAILING: DELINEATOR: TYPE (E)	TYPE (F)	TYPE (G)	OBJECT MARKER (TYPE L1)	METAL BEAM GUARD RAILING (WOOD POST)	VEGETATION CONTROL (MINOR CONCRETE)	TRANSISTION RAILING (TYPE WB)	END ANCHOR ASSEMBLY (TYPE SFT)	BURIED POST END ANCHOR	ALTERNATIVE IN-LINE TERMINAL SYSTEM	ALTERNATIVE FLARED TERMINAL SYSTEM	METAL BEAM GUARD RAILING TERMINAL SYSTEM (TYPE FLEAT)	COMMENTS
					(N)	(N)	EA	LF	LF	EA	(N)	LF	CY	TON	LF	LF	LF	(N)	EA	EA	EA	EA	LF	SQYD	EA	EA	(N)	EA	EA	EA	
1	CC	4	R	4.936	11B	3	1	62.5			2	125	11.3	37.4	62.5	62.5					6	1	25			1			1		
2				8.409	11A			75			2									7			25			1		1			
3				8.449	12A	1	1	100			1						3.5	1		9		1	25		1			1			
4				11.666	11B	3		62.5			2										6	1	25			1			1		
5(1)				13.637	16A			62.5			2									8			37.5			1		1			
5(2)				13.637	12B	1	2	62.5			1						3.5	25		6		1			1			1			
6				13.706	12B	6	1	62.5			1							60		6		1			1			1			
7				15.604	11A	3	1	62.5	30		2			0.3	18	12				7		1	25			1		1			
8				17.181	16B		1	62.5	25		2		0.5	0.3		25				6		1	25			1			1		
9(1)				17.183	11B	3	1	62.5	15		2			0.2	2.5	12.5				7		1	25			1			1		
9(2)				17.183	11B	3	1	62.5	62.5		2			0.4	62.5					7		1	25			1			1		
10(1)				19.877	12C	4	1	37.5	50		1		0.9	0.6		50		SD		9		0	37.5		1		1				ADD BPEA TO WEST RAIL, RESET WOOD SIGN AT EAST RAIL.
10(2)				19.877	12B	1	2	50		1	1							SD				1			1				1		
11(1)				19.950	12B	1	1	62.5			1						9	27		5		1			1				1		
11(2)				19.950	12A	1	2	62.5			1						3.5	25			5	1			1			1			
12(1)				20.294	16B	3	1	62.5			2										10	1	25			1				1	
12(2)				20.294	12B	1	1	62.5		2	1						9	27		5		1			1				1		

(N) NOT A SEPARATE PAY ITEM. FOR INFORMATION ONLY

NOTES:

* CONCRETE BARRIER TRANSITION BLOCKS FOR CONNECTING NEW TRANSITION RAILING (TYPE WB) TO EXISTING CONCRETE BARRIER, BRIDGE RAILING OR RETAINING WALL.
** SEE SHEETS LISTED BELOW BY EXISTING BARRIER TYPE FOR DETAILS TRANSITION BLOCK TO CONNECT TRANSITION RAILING (TYPE WB) TO EXISTING CONCRETE BARRIER, BRIDGE RAILING RAILING OR RETAINING WALL.
*** SEE DETAIL ON CONSTRUCTION DETAILS SHEET C-32
**** NUMBERS IN PARENTHESES INDICATE WHICH RAILING AT LOCATIONS WITH MORE THAN ONE MBGR. SEE LOCATIONS OF CONSTRUCTION
***** SEE REMOVE CONCRETE ON MISCELLANEOUS ROADWAY QUANTITIES (SHEET SQ-10) FOR TOTAL

SD: STRUCTURE DESIGN DETAILS FOR BARRIER TRANSITION BLOCK TO CONNECT TRANSITION RAILING (TYPE WB) TO EXISTING BRIDGE BARRIER RAILING OR RETAINING WALL. SEE STRUCTURE PLANS.
SP: STANDARD PLAN A77J3, DETAIL C, ANCHOR BLOCK FOR TRANSITION RAILING CONNECTION.
1: CONCRETE BARRIER TRANSITION BLOCK FOR CONNECTING TRANSITION RAILING (TYPE WB) TO EXISTING TYPE 1 BARRIER RAILING. SEE CONSTRUCTION DETAILS SHEET.
2: CONCRETE BARRIER TRANSITION BLOCK FOR CONNECTING TRANSITION RAILING (TYPE WB) TO EXISTING TYPE 2 BARRIER RAILING. SEE CONSTRUCTION DETAILS SHEET.
5: CONCRETE BARRIER TRANSITION BLOCK AND SIDEWALK RAMP FOR TRANSITION RAILING (TYPE WB) TO EXISTING TYPE 5 BARRIER RAILING. SEE CONSTRUCTION DETAILS SHEET.
25: CONCRETE BARRIER TRANSITION BLOCK FOR TRANSITION RAILING (TYPE WB) TO EXISTING CONCRETE BARRIER (TYPE 25). SEE CONSTRUCTION DETAILS SHEET.
27: CONCRETE BARRIER TRANSITION BLOCK FOR TRANSITION RAILING (TYPE WB) TO EXISTING CONCRETE BARRIER (TYPE 27). SEE CONSTRUCTION DETAILS SHEET.
50: CONCRETE BARRIER TRANSITION BLOCK FOR TRANSITION RAILING (TYPE WB) TO EXISTING CONCRETE BARRIER (TYPE 50). SEE CONSTRUCTION DETAILS SHEET.
50C: CONCRETE BARRIER TRANSITION BLOCK FOR TRANSITION RAILING (TYPE WB) TO EXISTING CONCRETE BARRIER (TYPE 50C). SEE CONSTRUCTION DETAILS SHEET.
60: DETAILS FOR CONNECTING TRANSITION RAILING (TYPE WB) DIRECTLY TO EXISTING CONCRETE BARRIER (TYPE 60). SEE CONSTRUCTION DETAILS SHEET.

SUMMARY OF QUANTITIES

Q-1

REVISED BY | DATE REVISED
CALCULATED-DESIGNED BY | CHECKED BY
FUNCTIONAL SUPERVISOR: ALBERT J. ZEPEDA
STATE OF CALIFORNIA - DEPARTMENT OF TRANSPORTATION
Caltrans DESIGN

LAST REVISION 04-16-12 | DATE PLOTTED => 04-JUN-2012 TIME PLOTTED => 15:58

Dist	COUNTY	ROUTE	POST MILES TOTAL PROJECT	SHEET No.	TOTAL SHEETS
04	Ala,CC	4,80,84, 92,238,etc.	Var	93	141

Paul Snyder 4-11-12
REGISTERED CIVIL ENGINEER DATE

6-4-12
PLANS APPROVAL DATE

REGISTERED PROFESSIONAL ENGINEER Paul Alan Snyder No. 41128 Exp. 3-31-13 CIVIL STATE OF CALIFORNIA

THE STATE OF CALIFORNIA OR ITS OFFICERS OR AGENTS SHALL NOT BE RESPONSIBLE FOR THE ACCURACY OR COMPLETENESS OF SCANNED COPIES OF THIS PLAN SHEET.

ROADWAY QUANTITIES

PROJECT WORK LOCATIONS: LOCATION No. ****	COUNTY	ROUTE	PREFIX	POST MILE	Std PLAN MBGR LAYOUT TYPE	LAYOUT DETAIL No. OR CONSTRUCTION DETAIL SHT	REMOVE MARKER	REMOVE METAL BEAM GUARD RAILING	REMOVE ASPHALT CONCRETE DIKE	RESET ROADSIDE SIGN	REMOVE TERMINAL SECTION	REMOVE CONCRETE (CURB AND GUTTER) ***	ROADWAY EXCAVATION ***	HOT MIX ASPHALT (TYPE A) ***	PLACE HOT MIX ASPHALT DIKE (TYPE C)	PLACE HOT MIX ASPHALT DIKE (TYPE F)	CONCRETE BARRIER (TRANSITION) *	TYPE OF CONNECTION TO EXISTING BARRIER **	GUARD RAILING DELINEATOR TYPE (E)	GUARD RAILING DELINEATOR TYPE (F)	GUARD RAILING DELINEATOR TYPE (G)	OBJECT MARKER (TYPE L1)	METAL BEAM GUARD RAILING (WOOD POST)	VEGETATION CONTROL (MINOR CONRETE)	TRANSISTION RAILING (TYPE WB)	END ANCHOR ASSEMBLY (TYPE SFT)	BURIED POST END ANCHOR	ALTERNATIVE IN-LINE TERMINAL SYSTEM	ALTERNATIVE FLARED TERMINAL SYSTEM	METAL BEAM GUARD RAILING TERMINAL SYSTEM (TYPE FLEAT)	COMMENTS
					(N)	(N)	EA	LF	LF	EA	(N)	LF	CY	TON	LF	LF	LF	(N)	EA	EA	EA	EA	LF	SQYD	EA	EA	(N)	EA	EA	EA	
13	ALA	80		3.642	16B			62.5		3	2	62.5	5.7	18.7	37.5	25					5	1	25			1			1		REPLACE ENTIRE RAILING.
14(1)				4.671	12B	6	1	25										60			5	1			1						NEW TERMINAL SYSTEM NOT NEED AT THIS LOCATION.
14(2)				4.671	16B	3		12.5			1									4		1	12.5						1		NO TRAILING END UPGRADE(EAA TYPE SFT) AT THIS LOCATION.
15				4.761	16B	3	1	62.5			2	50	4.5	15.0	25	25					6	1	25			1			1		
16(1)				5.704	12A	1	1	50			1	105	9.5	31.2	75	25		SD		7		1			1			1			ALIGN FACE OF MBGR'S WITH FACE OF BRIDGE CURBS.
16(2)				5.704	12A	1	1	50		1	1	70	6.3	20.8	40	25		SD			7	1			1			1			
17				5.974	12B			62.5	25		1		0.5	0.2	25		9.4	SP		3		1			1					1	REPLACE 25' OF AC DIKE BEFORE APPROACH.
18	▼	▼		7.107	12B	2	1	87.5			1							SD			8	1	25		1					1	
19	CC	80		0.101	12B	1	2	62.5			1						3.5	25		3		1			1					1	
20				0.137	12B	1	1	62.5		1	1						3.5	25		6		1			1				1		
21				0.390	11B	3	2	62.5			2									3		1	25			1				1	
22				2.716	12B	2		100		1	1						3.5	25		9		1	25		1			1			
23				4.583	11A	2		100			1						9.5	50			9	1	25		1			1			
24				6.570	11B	3	1	50		1	1									4		1	12.5						1		NO TRAILING END UPGRADE NEEDED ALONG FITZGERALD DRIVE.
25				6.856	12B	1		62.5			1						9.5	50			6	1			1					1	
26				6.975	11B	3	1	50		1	2										5	1	12.5			1			1		
27				8.397	12B	1		62.5	40		1			0.4	15	25	9	27		6		1			1			1			
28				9.850	12B	2	1	100	125		1			1.1	75	50	3.5	25		9		1	25		1			1			
28A(1)				10.040	12B	1	1	62.5			1	95.5	10.4	28.4	62.5	25	9	27			6	1			1					1	
28A(2)	▼	▼		10.040	12B	1		62.5			1						9	27		6		1			1					1	
29	ALA	84	R	3.350	11A	3		62.5			2									6		1	12.5			1		1			

SUMMARY OF QUANTITIES

Q-2

REVISED BY | DATE REVISED
CALCULATED-DESIGNED BY | CHECKED BY
FUNCTIONAL SUPERVISOR: ALBERT J. ZEPEDA

STATE OF CALIFORNIA - DEPARTMENT OF TRANSPORTATION
Caltrans DESIGN

LAST REVISION 04-16-12 | DATE PLOTTED => 04-JUN-2012 TIME PLOTTED => 15:59

Dist	COUNTY	ROUTE	POST MILES TOTAL PROJECT	SHEET No.	TOTAL SHEETS
04	Ala,CC	4,80,84, 92,238,etc.	Var	94	141

Paul Snyder 4-11-12
REGISTERED CIVIL ENGINEER DATE

6-4-12
PLANS APPROVAL DATE

REGISTERED PROFESSIONAL ENGINEER Paul Alan Snyder No. 41128 Exp. 3-31-13 CIVIL STATE OF CALIFORNIA

THE STATE OF CALIFORNIA OR ITS OFFICERS OR AGENTS SHALL NOT BE RESPONSIBLE FOR THE ACCURACY OR COMPLETENESS OF SCANNED COPIES OF THIS PLAN SHEET.

ROADWAY QUANTITIES

PROJECT WORK LOCATIONS: LOCATION No. ****	COUNTY	ROUTE	PREFIX	POST MILE	Std PLAN MBGR LAYOUT TYPE	LAYOUT DETAIL No. OR COSTRUCTION DETAIL SHT	REMOVE MARKER	REMOVE METAL BEAM GUARD RAILING	REMOVE ASPHALT CONCRETE DIKE	RESET ROADSIDE SIGN	REMOVE TERMINAL SECTION	REMOVE CONCRETE (CURB AND GUTTER) ***	ROADWAY EXCAVATION ***	HOT MIX ASPHALT (TYPE A) ***	PLACE HOT MIX ASPHALT DIKE (TYPE C)	PLACE HOT MIX ASPHALT DIKE (TYPE F)	CONCRETE BARRIER (TRANSITION) *	TYPE OF CONNECTION TO EXISTING BARRIER **	GUARD RAILING DELINEATOR TYPE (E)	GUARD RAILING DELINEATOR TYPE (F)	GUARD RAILING DELINEATOR TYPE (G)	OBJECT MARKER (TYPE L1)	METAL BEAM GUARD RAILING (WOOD POST)	VEGETATION CONTROL (MINOR CONRETE)	TRANSISTION RAILING (TYPE WB)	END ANCHOR ASSEMBLY (TYPE SFT)	BURIED POST END ANCHOR	ALTERNATIVE IN-LINE TERMINAL SYSTEM	ALTERNATIVE FLARED TERMINAL SYSTEM	METAL BEAM GUARD RAILING TERMINAL SYSTEM (TYPE FLEAT)	COMMENTS
					(N)	(N)	EA	LF	LF	EA	(N)	LF	CY	TON	LF	LF	LF	(N)	EA	EA	EA	EA	LF	SQYD	EA	EA	(N)	EA	EA	EA	
30	ALA	84	R	3.450	16A	3		62.5			2									6		1	12.5			1		1			
31				3.670	11B	3	1	50			2										5	1	12.5			1			1		
32				3.747	16B	2	1	100	100		1			0.9	50	50	3.5	25		8		1	25		1			1			
33				3.814		C-7	2	50			2										10	1	12.5						1		SEE DETAILS ON SHEET C-7
34(1)				10.633	12C		1	62.5			1						9.4	SP	4				37.5		1		1				
34(2)				10.633	12C,16C	4	1	50			1						9.4	SP	18				62.5		1		1				
35(1)				10.633	12C			62.5			1						9.4	SP	4				37.5		1		1				
35(2)				10.633	12C			62.5			1						9.4	SP	4				37.5		1		1				
36(1)				10.713	12C		1	62.5			1						9.4	SP	4				37.5		1		1				
36(2)				10.713	12C	4	1	50		2	1						9.4	SP	7				25		1		1				
37(1)				10.713	12C			62.5			1						9.4	SP	4				37.5		1		1				
37(2)				10.713	12C		1	62.5	42		1		0.8	0.4		33	9.4	SP	4				37.5		1		1				
38	ALA	92		4.470	16C	C-8		12.5			2									3			25			1	1				
39				4.470	12A	1	2	200		1	1	225	24.5	66.5	215		10	5		19			150		1			1			
40				5.001	12A	2		100		1	1						3.5	25		9		1	25		1			1			
41	ALA	238		2.191	12B	1	1	112.5		1	1							SD		6		1			1					1	MOVE START 12.5' NORTH (SHORTEN RAIL)
41A			R	14.033	12B	1		62.5			1						3.5	25			6	1			1					1	INSTALL WBTR AND BARRIER TRANSITION BLACK.
41B			R	14.470	12B	1		75			1						3.5	25		7		1	12.5		1					1	
42(1)	CC	242	R	1.457	11B	3		62.5			2	15	1.4	4.4	15						6		25			1			1		
42(2)				1.457	12B	1		62.5	22		1			0.2		18	3.5	25		6		1			1				1		
42(3)				1.457	12B	1		62.5		1	1						3.5	25			6	1			1				1		
43(1)				1.499	12B	1		62.5			1						9	27			6	1			1				1		
43(2)				1.499	12B,16B	2		75	57.5		1			0.3	57.5		3.5	25		11			25		1				1		EXTEND START OF RAILING 12.5' FARTHER SOUTH
43(3)				1.499	12B	1		62.5			1						3.5	25			6				1				1		
43A(1)				1.665	12B	1		62.5	3.5		1			0.02	3.5		3.5	25			6				1				1		
43A(2)				1.665	12B	1		62.5			1						3.5	25		6		1			1				1		
44				2.046	12B	1		87.5	50	1	1			0.6		50	3.5	25		8		1	25		1				1		
45				2.274	16B	3		62.5			2	100	10.9	29.8	62.5	37.5					6	1	25			1		1			
46				2.625	12B	1	1	62.5			1						3.5	25		6		1			1					1	
47	ALA	260	R	0.893	16B			62.5			2	75	6.8	22.3	62.5	12.5					6	1	25			1				1	
48				0.983	12B	2		62.5			1						9	27			6	1		40.2	1				1		
49				1.051	16B			62.5	75		2		1.4	0.5	75						6	1	25			1			1		
50(1)				1.124	16B	3		50			1										5	1	12.5							1	EXISTING TRAILING RAIL & STEEL POST TO REMAIN
50(2)				1.124	16B	3		50			1	20	1.8	6.0	10	10				5		1	12.5							1	EXISTING TRAILING RAIL & STEEL POST TO REMAIN
51(1)	ALA	580	R	5.933	12B	1,C-31	2	75	30		1		0.6	0.2	30		43.7	2	6			1			1				1		CONCRETE BARRIER TRANSITION WITH CULVERT NOTCH AT DI, SEE C-31
51(2)				5.933	12B	1	2	75			1						43.7	2	6			1			1				1		
51(3)				5.933	12A	1		75	15		1		0.3	0.1	15		43.7	2	6						1				1		

SUMMARY OF QUANTITIES
Q-3

REVISED BY | DATE REVISED
CALCULATED-DESIGNED BY | CHECKED BY
FUNCTIONAL SUPERVISOR: ALBERT J. ZEPEDA

STATE OF CALIFORNIA - DEPARTMENT OF TRANSPORTATION
DESIGN
Caltrans

LAST REVISION 04-16-12 | DATE PLOTTED => 04-JUN-2012 | TIME PLOTTED => 15:59

Dist	COUNTY	ROUTE	POST MILES TOTAL PROJECT	SHEET No.	TOTAL SHEETS
04	Ala,CC	4,80,84, 92,238,etc.	Var	95	141

Paul Snyder 4-11-12
REGISTERED CIVIL ENGINEER DATE

6-4-12
PLANS APPROVAL DATE

REGISTERED PROFESSIONAL ENGINEER Paul Alan Snyder No. 41128 Exp. 3-31-13 CIVIL STATE OF CALIFORNIA

THE STATE OF CALIFORNIA OR ITS OFFICERS OR AGENTS SHALL NOT BE RESPONSIBLE FOR THE ACCURACY OR COMPLETENESS OF SCANNED COPIES OF THIS PLAN SHEET.

ROADWAY QUANTITIES

PROJECT WORK LOCATIONS: LOCATION No. ****	COUNTY	ROUTE	PREFIX	POST MILE	Std PLAN MBGR LAYOUT TYPE	LAYOUT DETAIL No. OR CONSTRUCTION DETAIL SHT	REMOVE MARKER	REMOVE METAL BEAM GUARD RAILING	REMOVE ASPHALT CONCRETE DIKE	RESET ROADSIDE SIGN	REMOVE TERMINAL SECTION	REMOVE CONCRETE (CURB AND GUTTER) ***	ROADWAY EXCAVATION ***	HOT MIX ASPHALT (TYPE A) ***	PLACE HOT MIX ASPHALT DIKE (TYPE C)	PLACE HOT MIX ASPHALT DIKE (TYPE F)	CONCRETE BARRIER (TRANSITION) *	TYPE OF CONNECTION TO EXISTING BARRIER **	GUARD RAILING DELINEATOR TYPE (E)	GUARD RAILING DELINEATOR TYPE (F)	GUARD RAILING DELINEATOR TYPE (G)	OBJECT MARKER (TYPE L1)	METAL BEAM GUARD RAILING (WOOD POST)	VEGETATION CONTROL (MINOR CONRETE)	TRANSISTION RAILING (TYPE WB)	END ANCHOR ASSEMBLY (TYPE SFT)	BURIED POST END ANCHOR	ALTERNATIVE IN-LINE TERMINAL SYSTEM	ALTERNATIVE FLARED TERMINAL SYSTEM	METAL BEAM GUARD RAILING TERMINAL SYSTEM (TYPE FLEAT)	COMMENTS
					(N)	(N)	EA	LF	LF	EA	(N)	LF	CY	TON	LF	LF	LF	(N)	EA	EA	EA	EA	LF	SQYD	EA	EA	(N)	EA	EA	EA	
51(4)	ALA	580	R	5.933	12A	1		75	38		1		0.7	0.2	38		43.7	2	6						1				1		
53				17.940		C-9	1	50			2										6	1	12.5						1		SEE DETAIL SEE SHEET C-9
54(1)				18.601	16B	3		62.5	65		2		1.2	0.8	62.7	3.75				7		1	25			1				1	
54(2)				18.601	11B	3		62.5		1	2										15	1	25			1		1			
54(3)				18.601	11B	3	1	75		3	2									7		1	25			1		1			
55				18.791	11B	3	1	75		1	2										5	1	12.5			1			1		MOVE START OF ON-RAMP APPROACH RAILING 25' EAST.
56				18.851	11B	C-10	2	75			2										10	1	12.5						1		MOVE START OF ON-RAMP APPROACH RAILING 25' SW.
57				19.051	11A	3		75	87.5		2			0.6	75	12.5					7	1	25			1		1			
58				19.851	12B	1		87.5		1	1						9.5	50		8		1	25		1				1		
59				19.871	11B	2		100		2	1						3.5	25			8	1	25		1				1		MOVE START OF ON-RAMP APPROACH RAILING 25' SW.
60				20.591	12A	1	2	75			1						43.7	2		7		1			1				1		
61			R	26.410	11A	3	1	75	100		2			0.8	75	25				7		1	25			1		1			REPLACE 12.5' TRAILING TRANSITION.
62			R	28.270	11B	3		50	12.5		2	62.5	5.7	18.7	62.5	12.5				5		1	12.5			1				1	
63(1)			R	28.360	11B	3		62.5			2										7	1	25			1			1		
63(2)			R	28.360	12B	2		37.5									3.5	25		4			12.5		1						NEW TERMINAL SYSTEM NOT NEEDED.
64			R	29.530	12A	1		62.5	25		1			0.2	25		9	27		6		1			1				1		
65			M	31.028	12B	1		75			1						3.5	25		7		1	12.5		1				1		
65A			M	31.029	12B	1	1	75			1						3.5	25			4	1	12.5		1					1	
66			R	31.961	11A	3	1	75		1	2	87.5	9.5	26.1	75	25					3	1	25			1				1	
67				32.591	11A	C-11		200		2	2	250	27.3	75.2	50	200					21		200			1		1			
68				32.971	11A	3		75			1	87.5	7.9	26.0	75	12.5					7	1	25			1		1			DO NOT REPLACE TRAILING DIKE

STATE OF CALIFORNIA - DEPARTMENT OF TRANSPORTATION
Caltrans DESIGN

FUNCTIONAL SUPERVISOR: ALBERT J. ZEPEDA

CALCULATED-DESIGNED BY | CHECKED BY | REVISED BY | DATE REVISED

SUMMARY OF QUANTITIES

Q-4

LAST REVISION 04-16-12 | DATE PLOTTED => 04-JUN-2012 | TIME PLOTTED => 15:59

Dist	COUNTY	ROUTE	POST MILES TOTAL PROJECT	SHEET No.	TOTAL SHEETS
04	Ala,CC	4,80,84, 92,238,etc.	Var	96	141

Paul Snyder 4-11-12
REGISTERED CIVIL ENGINEER DATE

6-4-12
PLANS APPROVAL DATE

REGISTERED PROFESSIONAL ENGINEER Paul Alan Snyder No. 41128 Exp. 3-31-13 CIVIL STATE OF CALIFORNIA

THE STATE OF CALIFORNIA OR ITS OFFICERS OR AGENTS SHALL NOT BE RESPONSIBLE FOR THE ACCURACY OR COMPLETENESS OF SCANNED COPIES OF THIS PLAN SHEET.

ROADWAY QUANTITIES

PROJECT WORK LOCATIONS: LOCATION No. ****	COUNTY	ROUTE	PREFIX	POST MILE	Std PLAN MBGR LAYOUT TYPE	LAYOUT DETAIL No. OR CONSTRUCTION DETAIL SHT	REMOVE MARKER	REMOVE METAL BEAM GUARD RAILING	REMOVE ASPHALT CONCRETE DIKE	RESET ROADSIDE SIGN	REMOVE TERMINAL SECTION	REMOVE CONCRETE (CURB AND GUTTER) ***	ROADWAY EXCAVATION ***	HOT MIX ASPHALT (TYPE A) ***	PLACE HOT MIX ASPHALT DIKE (TYPE C)	PLACE HOT MIX ASPHALT DIKE (TYPE F)	CONCRETE BARRIER (TRANSITION) *	TYPE OF CONNECTION TO EXISTING BARRIER **	GUARD RAILING DELINEATOR TYPE (E)	GUARD RAILING DELINEATOR TYPE (F)	GUARD RAILING DELINEATOR TYPE (G)	OBJECT MARKER (TYPE L1)	METAL BEAM GUARD RAILING (WOOD POST)	VEGETATION CONTROL (MINOR CONRETE)	TRANSISTION RAILING (TYPE WB)	END ANCHOR ASSEMBLY (TYPE SFT)	BURIED POST END ANCHOR	ALTERNATIVE IN-LINE TERMINAL SYSTEM	ALTERNATIVE FLARED TERMINAL SYSTEM	METAL BEAM GUARD RAILING TERMINAL SYSTEM (TYPE FLEAT)	COMMENTS
					(N)	(N)	EA	LF	LF	EA	(N)	LF	CY	TON	LF	LF	LF	(N)	EA	EA	EA	EA	LF	SQYD	EA	EA	(N)	EA	EA	EA	
70				36.251	11B	3		62.5		1	2									6		1	25			1				1	
71				37.621	12B	1	1	50		1	1							SD		6		1	93.8	40.2	1		1				
72				37.931	11B	3	1	62.5			1	75	6.8	22.3	62.5	12.5					6	1	25			1			1		
73(1)				39.061	12B			50			1						9.4	SP			6	1			1					1	
73(2)				39.061	16B	3					2											1	25			1				1	
74				39.281	12B	1	1	50		1	1	118	12.9	35.0	75	25	43.7	2		7		1		40.2	1				1		
75				40.971	12A	2		100			1						43.7	2		9		1	25		1			1			
76(1)				41.731	11B			300			2									28		1	300			1			1		REPLACE ALL OF EAST RAILING.
76(2)				41.731	12C	5		50			1							SD					37.5		1		1				
77(1)				42.031	12B	1		50			1	130	11.8	38.5	75	25	47.2	2			6	1		40.2	1			1			
77(2)				42.031	12B	1		50			1						3.5	1		6		1		40.2	1			1			
78(1)				42.901	16B	3		62.5			2	87.5	9.5	26.1	62.5	25					7	1	25			1				1	
78(2)				42.901	12C	5		50			1	147	16.0	43.7	100	37.5	9.5	50		10			100		1		1				
79				43.761	16B			75			2									7		1	25			1		1			
80				44.307		C-12	1	62.5		2	1	80	7.2	23.7	80		36	2		6											SEE DETAILS ON SHEET C-12 AND C-32
81(1)				44.308	12B,16B	1		112.5			1	156	14.1	46.2	62.5	50	43.7	2			8	1	25	42.5	1				1		
81(2)				44.308	16B	3		62.5			2	87.5	9.5	26.1	62.5	25				7		1	25			1			1		
82(1)				44.433	12C	1	1	62.5				144	15.7	42.5	75	25	43.7	2			7				1			1			
82(2)				44.433		C-13	1	70			1	125	11.3	37.6	21	100	43.7	2		3	6		62.5	21.7	1						SEE DETAILS ON SHEET C-13

SUMMARY OF QUANTITIES

Q-5

STATE OF CALIFORNIA - DEPARTMENT OF TRANSPORTATION
Caltrans DESIGN

FUNCTIONAL SUPERVISOR: ALBERT J. ZEPEDA

CALCULATED-DESIGNED BY | CHECKED BY | REVISED BY | DATE REVISED

LAST REVISION 04-16-12 | DATE PLOTTED => 04-JUN-2012 | TIME PLOTTED => 15:59

Dist	COUNTY	ROUTE	POST MILES TOTAL PROJECT	SHEET No.	TOTAL SHEETS
04	Ala,CC	4,80,84, 92,238,etc.	Var	97	141

Paul Snyder 4-11-12
REGISTERED CIVIL ENGINEER DATE

6-4-12
PLANS APPROVAL DATE

REGISTERED PROFESSIONAL ENGINEER Paul Alan Snyder No. 41128 Exp. 3-31-13 CIVIL STATE OF CALIFORNIA

THE STATE OF CALIFORNIA OR ITS OFFICERS OR AGENTS SHALL NOT BE RESPONSIBLE FOR THE ACCURACY OR COMPLETENESS OF SCANNED COPIES OF THIS PLAN SHEET.

ROADWAY QUANTITIES

PROJECT WORK LOCATIONS: LOCATION No. ****	COUNTY	ROUTE	PREFIX	POST MILE	Std PLAN MBGR LAYOUT TYPE	LAYOUT DETAIL No. OR CONSTRUCTION DETAIL SHT	REMOVE MARKER	REMOVE METAL BEAM GUARD RAILING	REMOVE ASPHALT CONCRETE DIKE	RESET ROADSIDE SIGN	REMOVE TERMINAL SECTION	REMOVE CONCRETE (CURB AND GUTTER) ***	ROADWAY EXCAVATION ***	HOT MIX ASPHALT (TYPE A) ***	PLACE HOT MIX ASPHALT DIKE (TYPE C)	PLACE HOT MIX ASPHALT DIKE (TYPE F)	CONCRETE BARRIER (TRANSITION) *	TYPE OF CONNECTION TO EXISTING BARRIER **	GUARD RAILING DELINEATOR TYPE (E)	GUARD RAILING DELINEATOR TYPE (F)	GUARD RAILING DELINEATOR TYPE (G)	OBJECT MARKER (TYPE L1)	METAL BEAM GUARD RAILING (WOOD POST)	VEGETATION CONTROL (MINOR CONRETE)	TRANSISTION RAILING (TYPE WB)	END ANCHOR ASSEMBLY (TYPE SFT)	BURIED POST END ANCHOR	ALTERNATIVE IN-LINE TERMINAL SYSTEM	ALTERNATIVE FLARED TERMINAL SYSTEM	METAL BEAM GUARD RAILING TERMINAL SYSTEM (TYPE FLEAT)	COMMENTS
					(N)	(N)	EA	LF	LF	EA	(N)	LF	CY	TON	LF	LF	LF	(N)	EA	EA	EA	EA	LF	SQYD	EA	EA	(N)	EA	EA	EA	
83	CC	580	R	0.086	12B	1		62.5	10		1			0.1		10	9	27		6		1			1					1	
84(1)				0.116	11B	3		62.5			2									7		1	25			1			1		
84(2)				0.116	12B	6	1	62.5			1							60		6		1			1			1			
85(1)				1.000	12A	1		62.5			1			0.0			3.5	25		7		2			1			1			
85(2)				1.000	12A	1		62.5	62.5		1			0.4	62.5		3.5	25			7				1			1			
86				2.930	11B	3		62.5			2										6	1	25			1			1		
87				3.400	11B	3	1	62.5			2										6	1	25			1			1		
88				4.504	12B	2		75	35	1	1	62.5	5.7	18.9	62.5	35	3.5	25		7		1	12.5		1				1		
89				5.128	12B	2	1	87.5	50	1	1			0.6		50	3.5	25		8		1	25		1				1		
90				5.504	12B	1	1	87.5			1						9.5	50		8		1	25		1					1	
91(1)				5.847	12DD	C-14		12.5	62.5		2		1.2		62.5						6		62.5			1					EXTEND RAIL BACK 50', ATTACH TO RW PER SP A77J3 Det. EE
92	ALA	680	R	8.312	12B	1		50		1	1						10	5		6		1			1				1		PLACE RAMP UP TO EAST END OF BRIDGE SIDEWALK. SEE Det
93(1)				15.251	12A	1		75		1		70	7.6	20.9	45	25	43.7	2			7	1			1			1			
93(2)				15.251	12B	1		25									3.5	1		6					1						RECONSTRUCT SRT AT END OF NEW TRANSITION RAILING.
94				18.396	12A	1		50			1						3.5	25		6		1			1			1			
95(1)				19.041	16B	3		62.5	87.5	1	2									7		1	25			1			1		UPGRADE RAILING SOUTH OF RAMP ON RIGHT SHOULDER AT OH SIGN
95(2)				19.041	12B	1	1	75									3.5	25			6	1			1				1		
95(3)				19.041	12B	2	2	87.5						0.8	37.5	45.5	3.5	25		7		1			1				1		
96(1)				19.261		C-15	2	75			1						3.5	25			10	1	12.5		1				1		RTA AT EACH END OF DBL MBGR. SEE DETAIL
96(2)				19.261	12B	1	2	75	40		1			0.2	40		3.5	25		6		1			1				1		
97(1)				19.351		C-16	1	75			2										7	1	12.5						1		SEE DETAILS ON SHEET C-16
97(2)				19.351	11B	3	1	62.5			2										8	1	25			1			1		
98				19.300	12B	1		75		1	1	100	9.1	29.8	62.5	37.5	3.5	25		7		1	12.5		1					1	
99				19.511	11B	3		62.5			2										6	1	25			1				1	REPLACE 12.5' ELEMENTS FOR TRANSITION AT APPROACH AND AT TRAILING END SFT.
100	CC	680	R	2.885	12A	1	1	62.5			1	100	9.1	29.8	75	25	3.5	25		7		1			1			1			
101				3.765	12B	1		62.5			1	87.5	9.5	26.1	62.5	25	3.5	25		6		1			1					1	
102				4.182	12B	1	1	62.5			1	87.5	7.9	26.1	62.5	25	3.5	25		6		1			1					1	
103				4.182		C-17		50			1	50	6.1	17.7				27		7					1						RMV & REPLC SDWLK W OF CONC BARRIER. INSTALL ADIEM CRSH CSHN SEE DETAIL
104				4.464	12B	1		62.5			1	87.5	7.9	26.1	62.5	25	3.5	25		6		1			1			1			CHAIN LINK RAILING AT NEW EDGE OF SIDEWALK SEE DETAIL
105				12.456		C-18		12.5												1.36			17	21.7							SEE DETAILS ON SHEET C-18
106				13.693	12B	1	2	62.5			1						3.5	25		6		1			1				1		
107				15.522	12B	2	1	25		1	1									3		1	12.5						1		TRAILING END TRANSITION RAIL & BLOCK NOT NEEDED AT THIS Loc.
108				15.639	12B	1	1	62.5		1	1						3.5	25		6		1			1				1		
109				15.883	12C,16C	1	1	87.5	245	1	1		4.5	2.1	125	110	9	27		16		1	187.5	1				1			EXTEND BARRIER 132.5' NORTH.
110				16.171	12A,16A	1		37.5	175		1			1.4	112.5	62.5	3.5	25			12	1	37.5		1			1			EXTEND BARRIER 75' FARTHER SOUTH.
111				16.706	12B	1		62.5	100	1	1		1.9	0.8	75	25	9.5	50C		6		1			1					1	

SUMMARY OF QUANTITIES

Q-6

STATE OF CALIFORNIA - DEPARTMENT OF TRANSPORTATION
Caltrans DESIGN

FUNCTIONAL SUPERVISOR: ALBERT J. ZEPEDA

CALCULATED-DESIGNED BY | CHECKED BY | REVISED BY | DATE REVISED

LAST REVISION 04-16-12 | DATE PLOTTED => 04-JUN-2012 | TIME PLOTTED => 16:04

Dist	COUNTY	ROUTE	POST MILES TOTAL PROJECT	SHEET No.	TOTAL SHEETS
04	Ala,CC	4,80,84, 92,238,etc.	Var	98	141

Paul Snyder 4-11-12
REGISTERED CIVIL ENGINEER DATE

6-4-12
PLANS APPROVAL DATE

REGISTERED PROFESSIONAL ENGINEER Paul Alan Snyder No. 41128 Exp. 3-31-13 CIVIL STATE OF CALIFORNIA

THE STATE OF CALIFORNIA OR ITS OFFICERS OR AGENTS SHALL NOT BE RESPONSIBLE FOR THE ACCURACY OR COMPLETENESS OF SCANNED COPIES OF THIS PLAN SHEET.

ROADWAY QUANTITIES

PROJECT WORK LOCATIONS: LOCATION No. ****	COUNTY	ROUTE	PREFIX	POST MILE	Std PLAN MBGR LAYOUT TYPE	LAYOUT DETAIL No. OR CONSTRUCTION DETAIL SHT	REMOVE MARKER	REMOVE METAL BEAM GUARD RAILING	REMOVE ASPHALT CONCRETE DIKE	RESET ROADSIDE SIGN	REMOVE TERMINAL SECTION	REMOVE CONCRETE (CURB AND GUTTER) ***	ROADWAY EXCAVATION ***	HOT MIX ASPHALT (TYPE A) ***	PLACE HOT MIX ASPHALT DIKE (TYPE C)	PLACE HOT MIX ASPHALT DIKE (TYPE F)	CONCRETE BARRIER (TRANSITION) *	TYPE OF CONNECTION TO EXISTING BARRIER **	GUARD RAILING DELINEATOR TYPE (E)	GUARD RAILING DELINEATOR TYPE (F)	GUARD RAILING DELINEATOR TYPE (G)	OBJECT MARKER (TYPE L1)	METAL BEAM GUARD RAILING (WOOD POST)	VEGETATION CONTROL (MINOR CONRETE)	TRANSISTION RAILING (TYPE WB)	END ANCHOR ASSEMBLY (TYPE SFT)	BURIED POST END ANCHOR	ALTERNATIVE IN-LINE TERMINAL SYSTEM	ALTERNATIVE FLARED TERMINAL SYSTEM	METAL BEAM GUARD RAILING TERMINAL SYSTEM (TYPE FLEAT)	COMMENTS
							EA	LF	LF	EA	(N)	LF	CY	TON	LF	LF	LF	(N)	EA	EA	EA	EA	LF	SQYD	EA	EA	(N)	EA	EA	EA	
112	CC	680	R	17.954	16B			50			2									6		1	25			1			1		EXTEND BARRIER 12-5' FARTHER NORTH
113				19.094	12A	1	2	62.5	100		1			0.8	75	25	3.5	25		7		1			1				1		
114				19.183	12B	1	1	62.5	25		1			0.2	25		9.5	50		6		1			1				1		
115(1)				22.283	11B	3	1	62.5												7		1	25			1					1	
115(2)				22.283	12C	2	1	75									43.7	2		3			7.5		1						LEAVE EXISTING APPROACH TERMINAL SYSTEM AS-IS
115(3)				22.283	12A	1	3	62.5			1						43.7	2		7		1			1			1			
116				22.830	16B		1	37.5			2	80	7.2	23.8	62.5	17.5				7		1	25			1			1		EXTEND BARRIER 25' FARTHER SOUTH
117(1)	ALA	880		3.181	11B	3		62.5			2										7	1	25			1			1		
117(2)				3.181	12B	1		62.5		1	1						9	50		6		1			1				1		
118				3.191	11B	3		50			2									5		1	12.5			1		1			
119				3.191	12A	1		62.5			1						3.5	25		7		1			1			1			
120				3.240	12B	2		62.5			1							SD		6		1			1					1	
121				3.261	11A	3		75			2									7		1	25			1		1			
122				3.741	16B			62.5			2									6		1	25			1			1		
123				3.802	16B			62.5			2									6		1	25			1			1		
124(1)				4.221	16B	3		62.5			2									6	8	1	25			1			1		
124(2)				4.221	16B			62.5		1	2									6		1	25			1			1		
125				4.714	12B	2	3	75	6		1			0.2		12.5	3.5	25		7		1	12.5		1			1			
126				6.279		C-19		37.5	25		2			0.2	25					9		1	12.5					1			EXTEND MBGR 12.5' N. AT S END PLACE "W" BEAM TO THRIE BEAM ELEMENTS BETWEEN DTBB & ALT. MED. TERM SYSTEM
127				6.444	12B	2		87.5	62.5		1			0.4	62.5		9	27		8		1	25		1					1	
128(1)				7.017	11A	3		75			2										8	1	25			1		1			
128(2)				7.017	11A	3		75	62.5		2	12.5	1.1	4.3	62.5					8		1	25			1		1			
129				7.032	11A	3		75	62.5	1	2			0.4	62.5					7		1	25			1		1			

SUMMARY OF QUANTITIES

Q-7

STATE OF CALIFORNIA - DEPARTMENT OF TRANSPORTATION
Caltrans
DESIGN

FUNCTIONAL SUPERVISOR: ALBERT J. ZEPEDA

CALCULATED-DESIGNED BY | CHECKED BY | REVISED BY | DATE REVISED

LAST REVISION 04-16-12 | DATE PLOTTED => 04-JUN-2012 | TIME PLOTTED => 16:21

Dist	COUNTY	ROUTE	POST MILES TOTAL PROJECT	SHEET No.	TOTAL SHEETS
04	Ala,CC	4,80,84, 92,238,etc.	Var	99	141

Paul Snyder 4-11-12
REGISTERED CIVIL ENGINEER DATE

6-4-12
PLANS APPROVAL DATE

REGISTERED PROFESSIONAL ENGINEER
Paul Alan Snyder
No. 41128
Exp. 3-31-13
CIVIL
STATE OF CALIFORNIA

THE STATE OF CALIFORNIA OR ITS OFFICERS OR AGENTS SHALL NOT BE RESPONSIBLE FOR THE ACCURACY OR COMPLETENESS OF SCANNED COPIES OF THIS PLAN SHEET.

ROADWAY QUANTITIES

PROJECT WORK LOCATIONS: LOCATION No. ****	COUNTY	ROUTE	PREFIX	POST MILE	Std PLAN MBGR LAYOUT TYPE	LAYOUT DETAIL No. OR CONSTRUCTION DETAIL SHT	REMOVE MARKER	REMOVE METAL BEAM GUARD RAILING	REMOVE ASPHALT CONCRETE DIKE	RESET ROADSIDE SIGN	REMOVE TERMINAL SECTION	REMOVE CONCRETE (CURB AND GUTTER) ***	ROADWAY EXCAVATION ***	HOT MIX ASPHALT (TYPE A) ***	PLACE HOT MIX ASPHALT DIKE (TYPE C)	PLACE HOT MIX ASPHALT DIKE (TYPE F)	CONCRETE BARRIER (TRANSITION) *	TYPE OF CONNECTION TO EXISTING BARRIER **	GUARD RAILING DELINEATOR TYPE (E)	GUARD RAILING DELINEATOR TYPE (F)	GUARD RAILING DELINEATOR TYPE (G)	OBJECT MARKER (TYPE L1)	METAL BEAM GUARD RAILING (WOOD POST)	VEGETATION CONTROL (MINOR CONRETE)	TRANSISTION RAILING (TYPE WB)	END ANCHOR ASSEMBLY (TYPE SFT)	BURIED POST END ANCHOR	ALTERNATIVE IN-LINE TERMINAL SYSTEM	ALTERNATIVE FLARED TERMINAL SYSTEM	METAL BEAM GUARD RAILING TERMINAL SYSTEM (TYPE FLEAT)	COMMENTS
					(N)	(N)	EA	LF	LF	EA	(N)	LF	CY	TON	LF	LF	LF	(N)	EA	EA	EA	EA	LF	SQYD	EA	EA	(N)	EA	EA	EA	
																				3											
130	ALA	880		7.390	12B	3		62.5			2									7		1	25			1				1	
131				8.645	16B	3		62.5			2									3		1	25			1		1			
132				9.025	11B	3		62.5			2									6		1	25			1				1	
133				10.150	12B	1	1	62.5	12.5		1			0.1	12.5			27		6		1			1				1		
134				11.671		C-20					1						9				3	1									LEAVE SOUTH END AS IS SEE DETAILS ON SHEET C-20
135				12.871	12B	1	1	62.5			1							27		3		1			1					1	
136(1)				13.240	12B	1	1	62.5			1						9	27			6	1			1					1	
136(2)				13.240	12B	1	1	25									9	27		6		1			1						RECONSTRUCT EXISTING SRT AT END OF NEW TRANSITION RAILING
137				13.554	16B		1	62.5			2						9			6		1	25			1				1	
138				13.724	12B	1	1			1	1						9.5	50		6		1			1					1	
139				13.765	12B	2		87.5	50		1			0.5	12.5	37.5	3.5	25		8		1	25		1				1		
140				14.722	16B	3		62.5			2									6		1	25			1				1	
141				15.549	12B	1	1	87.5	62.5		1		1.2	0.4				SD		8		1	25		1					1	
142				15.748	12B	1	1	87.5			1							SD		8		1	25		1					1	
144	ALA	880		17.724	16B			62.5			2									6		1	25			1				1	
145				18.228	12B	1		62.5		2	1							SD		6		1			1			1			
146				18.482	12B	1		62.5		2	1							SD		6		1			1			1			

SUMMARY OF QUANTITIES

Q-8

STATE OF CALIFORNIA - DEPARTMENT OF TRANSPORTATION
Caltrans® DESIGN
FUNCTIONAL SUPERVISOR ALBERT J. ZEPEDA
CALCULATED-DESIGNED BY
CHECKED BY
REVISED BY
DATE REVISED

LAST REVISION 04-16-12
DATE PLOTTED => 04-JUN-2012
TIME PLOTTED => 16:21

Dist	COUNTY	ROUTE	POST MILES TOTAL PROJECT	SHEET No.	TOTAL SHEETS
04	Ala,CC	4,80,84, 92,238,etc.	Var	100	141

Paul Snyder 4-11-12
REGISTERED CIVIL ENGINEER DATE

6-4-12
PLANS APPROVAL DATE

REGISTERED PROFESSIONAL ENGINEER Paul Alan Snyder No. 41128 Exp. 3-31-13 CIVIL STATE OF CALIFORNIA

THE STATE OF CALIFORNIA OR ITS OFFICERS OR AGENTS SHALL NOT BE RESPONSIBLE FOR THE ACCURACY OR COMPLETENESS OF SCANNED COPIES OF THIS PLAN SHEET.

ROADWAY QUANTITIES

PROJECT WORK LOCATIONS: LOCATION No. ****	COUNTY	ROUTE	PREFIX	POST MILE	Std PLAN MBGR LAYOUT TYPE	LAYOUT DETAIL No. OR CONSTRUCTION DETAIL SHT	REMOVE MARKER	REMOVE METAL BEAM GUARD RAILING	REMOVE ASPHALT CONCRETE DIKE	RESET ROADSIDE SIGN	REMOVE TERMINAL SECTION	REMOVE CONCRETE (CURB AND GUTTER) ***	ROADWAY EXCAVATION ***	HOT MIX ASPHALT (TYPE A) ***	PLACE HOT MIX ASPHALT DIKE (TYPE C)	PLACE HOT MIX ASPHALT DIKE (TYPE F)	CONCRETE BARRIER (TRANSITION) *	TYPE OF CONNECTION TO EXISTING BARRIER **	GUARD RAILING DELINEATOR TYPE (E)	GUARD RAILING DELINEATOR TYPE (F)	GUARD RAILING DELINEATOR TYPE (G)	OBJECT MARKER (TYPE L1)	METAL BEAM GUARD RAILING (WOOD POST)	VEGETATION CONTROL (MINOR CONRETE)	TRANSISTION RAILING (TYPE WB)	END ANCHOR ASSEMBLY (TYPE SFT)	BURIED POST END ANCHOR	ALTERNATIVE IN-LINE TERMINAL SYSTEM	ALTERNATIVE FLARED TERMINAL SYSTEM	METAL BEAM GUARD RAILING TERMINAL SYSTEM (TYPE FLEAT)	COMMENTS
					(N)	(N)	EA	LF	LF	EA	(N)	LF	CY	TON	LF	LF	LF	(N)	EA	EA	EA	EA	LF	SQYD	EA	EA	(N)	EA	EA	EA	
148	ALA	880		20.686	12A	1	1	62.5			1						3.5	25		7		1			1			1			
149				20.818	12B	1		50			1	62.5	5.7	18.5	62.5			SD		6		1			1					1	
150				20.820	16B	3		62.5			2	87.5	9.5	26.1	62.5	25				6		1	25			1			1		
151				20.821	16B	3	1	62.5	10		2	77.5	7.0	23.2	62.5	25				6		1	25			1		1			
152				20.902	16B	3	1	62.5			2									6		1	25			1				1	
153				20.902	16B	3		62.5			2									6		1	25			1			1		
154				21.556	12A	2		100			1	125	13.6	37.3	75	50	3.5	25		9		1	25		1			1			
155				22.837	12A	2	2	87.5		1	1	80	7.2	23.6	75	33	3.5	1		7		1			1					1	
156				22.720	11B	3	1	62.5			2									6		1	25			1				1	
157				22.946	12B	1		62.5			1						3.5	25		6		1			1				1		
158				23.709	16B	3		62.5	75		2	12.5	2.8	4.3	62.5	25				6		1	25			1				1	
159				24.731	12B	2	1	87.5		3	1						9.5	50		8		1	25		1					1	
160				24.910	16B		1	62.5		1	2									6		1	25			1				1	
161				25.522	11B	3		62.5			2									6		1	25			1			1		
162(1)				26.481	12B	1	1	62.5		1	1	69	6.2	20.4	69		43.7	2			6	1			1					1	
162(2)				26.481	12B	1	1	62.5			1	25	2.3	7.4	25		43.7	2		6		1			1					1	
163(1)				26.482	12B	1	1	62.5			1	69	7.5	20.4	69		43.7	2			6	1		40.2	1					1	
163(2)				26.482	12B	1	1	62.5			1	69	6.2	20.4	69		43.7	2		6		1			1					1	
164				26.581	12B	1		87.5			1							SD		8		1	25		1				1		
165(1)				26.701	11A	3		75			2	25	2.7	7.4	25						8	1	25			1			1		
165(2)				26.701		C-21	4	125		1	2	366	39.9	108.4	366		43.7	2		4	7		87.5		1	1					SEE DETAILS ON SHEET C-21 & C-22
166(1)				29.101	12A	1		62.5			1	105	11.4	31.2	75	25		SD			7	1		28.8	1			1			
166(2)	▼	▼		29.101	12B	1		62.5			1							SD		6		1		40.2	1					1	
167(1)	ALA	880		0.562	16A	3		62.5	112.5		2		2.1	0.9	75	37.5				8		1	25			1		1			
167(2)				0.562	16B	3		62.5	62.5		2	25	3.9	7.9	62.5	25					7	1	25			1		1			
167(3)				0.562	11A	3		62.5			1	37.5	4.1	11.6	87.5	12.5					6	1						1			
168	▼	▼		1.029	11A	3		75			2	75	6.8	22.4	50	25				7		1	25			1		1			
FROM STRUCTURES GENERAL PLAN SHT																	121														
PROJECT TOTALS							122	14483	2692	59	287	4629	484	1401	5091	2099	1509			1372		185	4243	396	127	78	14	58	79	55	

SUMMARY OF QUANTITIES

Q-9

STATE OF CALIFORNIA - DEPARTMENT OF TRANSPORTATION
Caltrans
DESIGN

FUNCTIONAL SUPERVISOR: ALBERT J. ZEPEDA
CALCULATED-DESIGNED BY
CHECKED BY
REVISED BY
DATE REVISED

LAST REVISION 04-16-12
DATE PLOTTED => 04-JUN-2012
TIME PLOTTED => 16:21

Dist	COUNTY	ROUTE	POST MILES TOTAL PROJECT	SHEET No.	TOTAL SHEETS
04	Ala,CC	4,80,84, 92,238,etc.	Var	101	141

Paul Snyder 4-11-12
REGISTERED CIVIL ENGINEER DATE

6-4-12
PLANS APPROVAL DATE

REGISTERED PROFESSIONAL ENGINEER Paul Alan Snyder No. 41128 Exp. 3-31-13 CIVIL STATE OF CALIFORNIA

THE STATE OF CALIFORNIA OR ITS OFFICERS OR AGENTS SHALL NOT BE RESPONSIBLE FOR THE ACCURACY OR COMPLETENESS OF SCANNED COPIES OF THIS PLAN SHEET.

MISCELLANEOUS ROADWAY QUANTITIES

LOCATION No.	REMOVE DOUBLE METAL BEAM BARRIER
	(LF)
33	50
53	12.5
56	50
96(1)	12.5
97(1)	12.5
126	50
TOTAL	187.5

LOCATION No.	RECONSTRUCT TERMINAL SYSTEM
	(EA)
93(2)	1
136(2)	1
TOTAL	2

LOCATION No.	RESET MARKER
	(EA)
5(1)	1
27	1
42(1)	1
43(2)	1
43(3)	1
43A(1)	1
50(2)	1
93(2)	1
TOTAL	8

LOCATION No.	ADJUST INLET
	(EA)
13	1
49	1
62	1
125	1
TOTAL	4

LOCATION No.	REMOVE CRASH CUSHION (SAND FILLED)
	(EA)
82(2)	1
165(2)	1
TOTAL	2

LOCATION No.	PLACE HOT MIX ASPHALT DIKE (TYPE E)
	(LF)
128(2)	12.5
TOTAL	12.5

LOCATION No.	MINOR CONCRETE (SIDEWALK)
	(CY)
39	2
92	2
103	4
TOTAL	8

LOCATION No.	DOUBLE METAL BEAM GUARD RAILING (WOOD POST)
	(LF)
33	75
53	12.5
56	87.5
96(1)	21.5
97(1)	12.5
134	12.5
TOTAL	221.5

LOCATION No.	COLD PLANE ASPHALT CONCRETE PAVEMENT
	(SQYD)
82(2)	33
TOTAL	33

LOCATION No.	CRASH CUSHION (ADIEM)
	(EA)
103	1
TOTAL	1

LOCATION No.	CRASH CUSHION (TYPE SMART SCI-100GM)
	(EA)
82(2)	1
TOTAL	1

LOCATION No.	END ANCHOR ASSEMBLY (TYPE CA)
	(EA)
53	1
97(1)	1
134	1
TOTAL	3

LOCATION No.	ALTERNATIVE MEDIAN TERMINAL SYSTEM
	(EA)
33	1
56	1
126	1
TOTAL	3

LOCATION No.	RAIL TENSIONING ASSEMBLIES
	(EA)
33	1
53	1
56	1
96(1)	2
97(1)	1
126	1
134	1
TOTAL	8

* PLACE RAIL TENSIONING ASSEMBLY AT LOCATIONS WHERE SINGLE MBGR CHANGES TO DOUBLE MBGR AS SHOWN IN STANDARD PLAN A77H2

LOCATION No.	END CAP (TYPE A)
	(EA)
91(1)	1
105	1
TOTAL	2

LOCATION No.	ALTERNATIVE CRASH CUSHION
	(EA)
80	1
165(2)	1
TOTAL	2

LOCATION No.	REMOVE CONCRETE	
	ISLAND	SIDEWALK
	(LF)	
82(2)	64	
103		50
TOTAL	64	50

LOCATION No.	TEMPORARY DRAINAGE INLET PROTECTION
	(EA)
VARIOUS	21

LOCATION No.	12" ALTERNATIVE PIPE CULVERT *
	(LF)
51(1)	5
TOTAL	5

* PLASTIC PIPE OR RCP

LOCATION No.	MISCELLANEOUS IRON AND STEEL
	(LB)
51(1)	652
TOTAL	652

LOCATION No.	MINOR CONCRETE (MINOR STRUCTURE)
	(CY)
51(1)	2
TOTAL	2

LOCATION No.	PORTABLE CHANGEABLE MESSAGE SIGN
	(EA)
VARIOUS	10

SUMMARY OF QUANTITIES

Q-10

STATE OF CALIFORNIA - DEPARTMENT OF TRANSPORTATION
DESIGN
Caltrans
FUNCTIONAL SUPERVISOR: ALBERT J. ZEPEDA
CALCULATED-DESIGNED BY
CHECKED BY
REVISED BY
DATE REVISED

LAST REVISION 04-16-12 | DATE PLOTTED => 05-JUN-2012 | TIME PLOTTED => 08:02

DIST	COUNTY	ROUTE	POST MILES TOTAL PROJECT	SHEET NO.	TOTAL SHEETS
04	Ala,CC	4,80,84, 92,238,*etc.*	Var	102	141

REGISTERED CIVIL ENGINEER

November 17, 2006
PLANS APPROVAL DATE

REGISTERED PROFESSIONAL ENGINEER Dallas Forester No. C37765 Exp. 12-31-06 CIVIL STATE OF CALIFORNIA

The State of California or its officers or agents shall not be responsible for the accuracy or completeness of electronic copies of this plan sheet.

To accompany plans dated 6-4-12

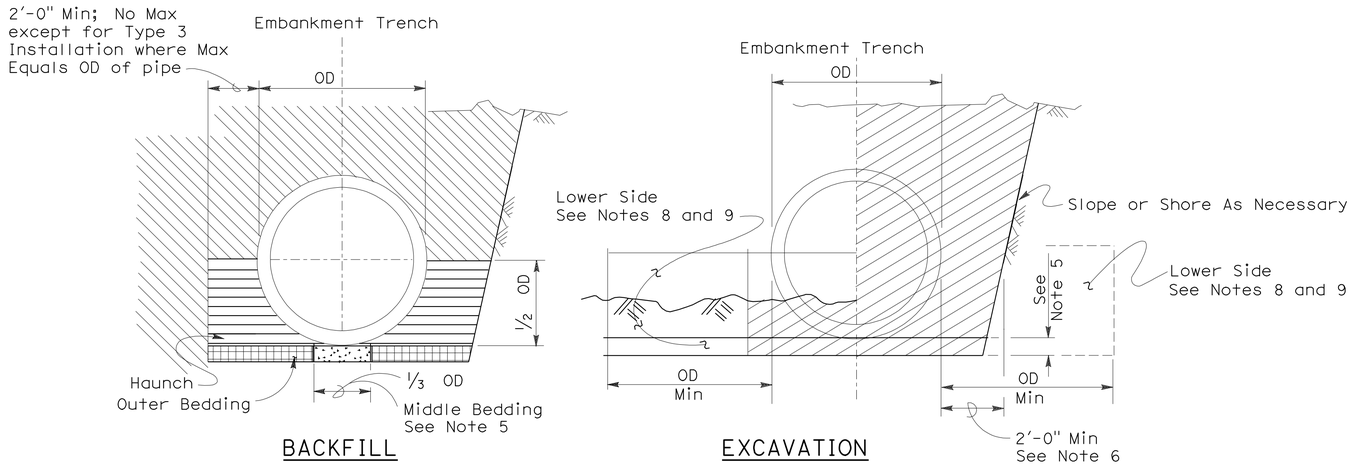

Roadway Embankment

Structure Backfill (Culvert) See Note 6

Structure Backfill (Culvert) See Note 6

Loose Backfill

Excavation Structure (Culvert)

TYPE 1 INSTALLATION:

The haunch and outer bedding shall be compacted to a minimum 90 percent relative compaction. In addition, the minimum sand equivalent in these areas shall be 30 and the maximum percentage passing the 75 μm sieve size shall be 12.

TYPE 2 INSTALLATION:

The haunch and outer bedding shall be compacted to a minimum 90 percent relative compaction. In addition, the minimum sand equivalent in these areas shall be 25.

TYPE 3 INSTALLATION:

The haunch and outer bedding shall be compacted to a minimum 85 percent relative compaction. 90 percent relative compaction will be required where the fill over the pipe is less than 4'-0" or 1/2 OD.

INSTALLATION TYPE 1

MINIMUM CLASS AND D-LOAD	COVER	
	108" Dia AND SMALLER	OVER 108" Dia
Class II 1000D	14.9'	12.9'
Class III 1350D	15.0' - 20.9'	13.0' - 18.9'
Class III Special 1700D	21.0' - 26.9'	19.0' - 24.9'
Class IV 2000D	27.0' - 31.9'	25.0' - 29.9'
Class IV Special 2500D	32.0' - 40.9'	30.0' - 38.9'
Class V 3000D	41.0' - 49.9'	39.0' - 46.9'
Class V Special 3600D	50.0' - 59.0'	47.0' - 58.0'

INSTALLATION TYPE 2

MINIMUM CLASS AND D-LOAD	COVER
Class II 1000D	9.9'
Class III 1350D	10.0'- 14.9'
Class III Special 1700D	15.0' - 19.9'
Class IV 2000D	20.0' - 24.9'
Class IV Special 2500D	25.0' - 31.9'
Class V 3000D	32.0' - 38.9'
Class V Special 3600D	39.0' - 47.0'

INSTALLATION TYPE 3

MINIMUM CLASS AND D-LOAD	COVER	
	48" Dia AND SMALLER	OVER 48" Dia
Class II 1000D	7.9'	5.9'
Class III 1350D	8.0' - 10.9'	6.0' - 8.9'
Class III Special 1700D	11.0' - 14.9'	9.0' - 12.9'
Class IV 2000D	15.0' - 17.9'	13.0' - 15.9'
Class IV Special 2500D	18.0' - 21.9'	16.0' - 19.9'
Class V 3000D	22.0' - 26.9'	20.0' - 24.9'
Class V Special 3600D	30.0' - 33.0'	25.0' - 31.0'

NOTES:

1. Unless otherwise shown on the plans or specified in the special provision, the Contractor shall have the option of selecting the class of RCP and the type of installation to be used, provided the height of cover does not exceed the value shown for the RCP selected.
   Example: 24" RCP culvert with maximum cover of 19'-0" the options are:
   a) Class III or stronger with Installation Type 1.
   b) Class III Special or stronger with Installation Type 2.
   c) Class IV Special or stronger with Installation Type 3.
   Cover is defined as the maximum vertical distance from top of the pipe to finished grade within the length of any given culvert.
2. The class of RCP and Installation Type selected shall be the same throughout the length of any given culvert.
3. The "length of any culvert" is defined as the culvert between:
   a) Successive drainage structure (inlets, junction boxes, headwalls, etc.).
   b) A drainage structure and the inlet or outlet end of the culvert.
   c) The inlet and outlet end of the culvert when there are no intervening drainage structures.
4. Oval and arch shaped RCP shall not be used.
5. 1/25 OD Min, not less than 3".
6. Slurry cement backfill may be substituted for backfill in the outer bedding and haunch areas. If slurry is used the outer and middle beddings shall be omitted. Prior to installation the soil under the middle 1/3 of the outside diameter of the pipe shall be softened by scarifying or other means to a minimum depth of 1/25 OD, but not less than 3". Where slurry cement backfill is used clear distance to trench wall may be reduced as set forth in Section 19-3.062 of the Standard Specifications.
7. Backfill shall be placed full width of excavation except where dimensions are shown for backfill width or thickness. Dimensions shown are minimums.
8. Lower side shall be suitable material as determined by the Engineer. Otherwise it shall be considered unsuitable as set forth in Section 19-2.02 of the Standard Specifications. See Note 9.
9. Where the pipe is placed in a trench, if the trench walls are sloped at 5 vertical to 1 horizontal or steeper for at least 90 percent of the trench height or up to not less than 12" from the grading plane, the firmness of the soil in the lower side need not be considered.
10. Non-reinforced precast concrete pipe sizes 3'-0" or smaller may be placed under installation Types 1, 2 or 3.

STATE OF CALIFORNIA
DEPARTMENT OF TRANSPORTATION

EXCAVATION AND BACKFILL CONCRETE PIPE CULVERTS

NO SCALE

RSP A62DA DATED NOVEMBER 17, 2006 SUPERSEDES STANDARD PLAN A62DA DATED MAY 1, 2006 - PAGE 20 OF THE STANDARD PLANS BOOK DATED MAY 2006.

REVISED STANDARD PLAN RSP A62DA

2006 REVISED STANDARD PLAN RSP A62DA

10-26-06

DIST	COUNTY	ROUTE	POST MILES TOTAL PROJECT	SHEET NO.	TOTAL SHEETS
04	Ala,CC	4,80,84, 92,238,etc.	Var	103	141

Randell D. Hiatt
REGISTERED CIVIL ENGINEER

May 20, 2011
PLANS APPROVAL DATE

REGISTERED PROFESSIONAL ENGINEER
Randell D. Hiatt
No. C50200
Exp. 6-30-11
CIVIL
STATE OF CALIFORNIA

The State of California or its officers or agents shall not be responsible for the accuracy or completeness of electronic copies of this plan sheet.

To accompany plans dated 6-4-12

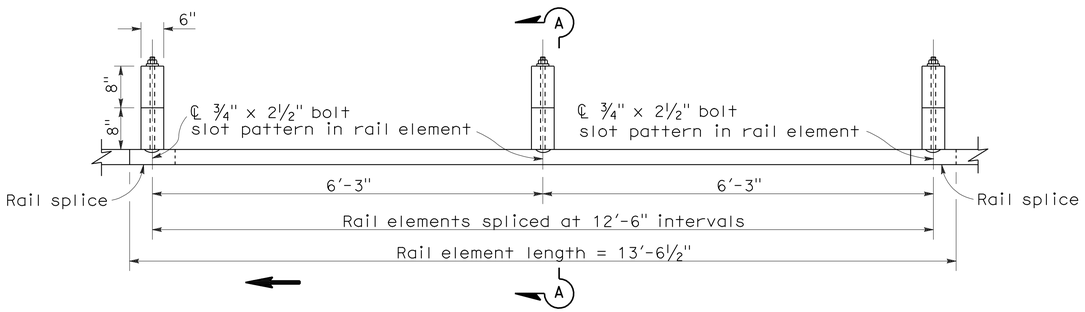

PLAN

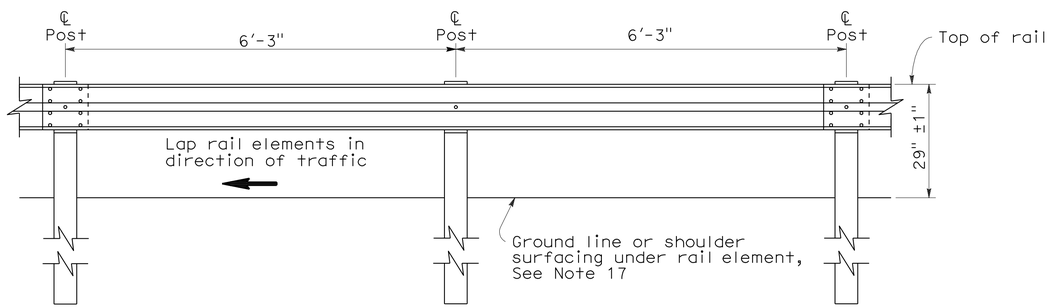

ELEVATION

METAL BEAM GUARD RAILING WITH WOOD POST AND BLOCKS

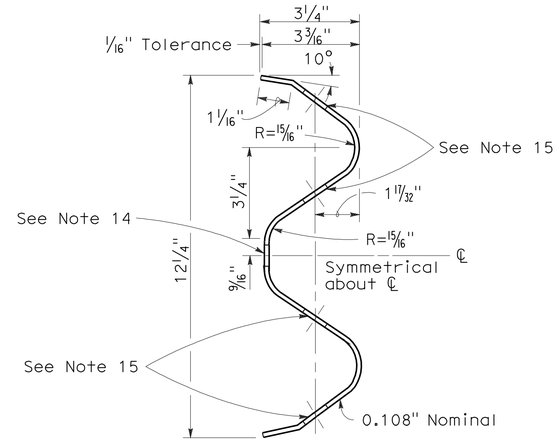

SECTION THRU RAIL ELEMENT

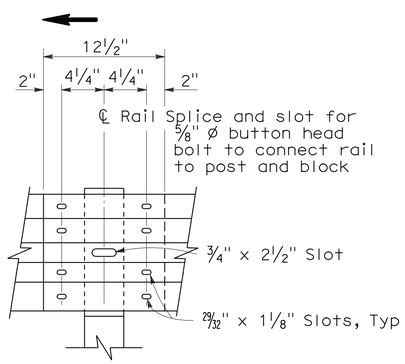

ELEVATION

RAIL ELEMENT SPLICE DETAIL

a) Connect the over lapped end of the rail elements with ⅝" ø x 1⅜" button head oval shoulder splice bolts inserted into the 29⁄32" x 1⅛" slots and bolted together with ⅝" ø recessed hex nuts. Recess of hex nut points toward rail element. A total of 8 bolts and nuts are to be used at each rail splice connection.

b) The ends of the rail elements are to be overlapped in the direction of traffic (see details).

c) Where end cap is to be attached to the end of a rail element, a total of 4 of the above described splice bolts and nuts are to be used.

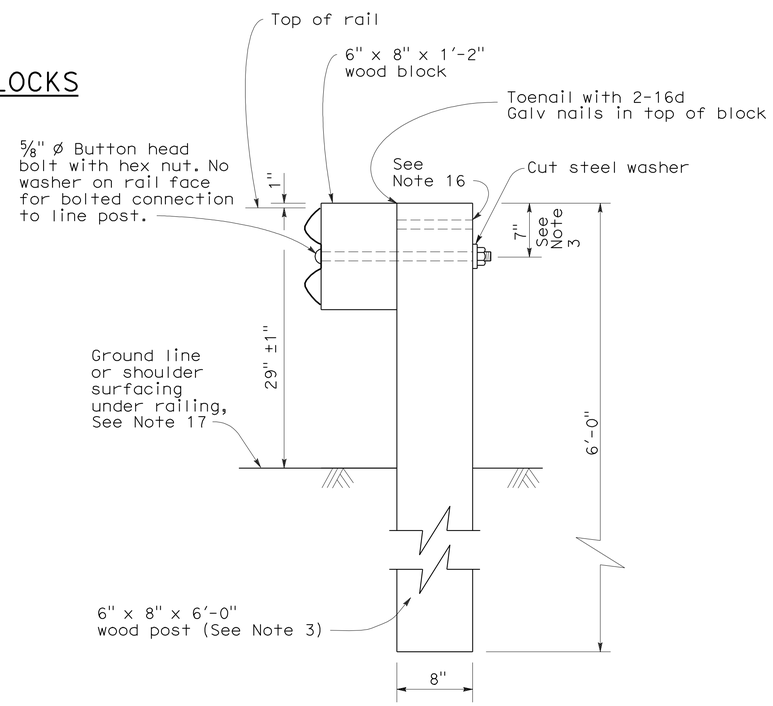

SECTION A-A

TYPICAL WOOD LINE POST INSTALLATION

See Note 4

NOTES:

1. For details of steel post installations, see Standard Plan A77A2.
2. For details of standard hardware used to construct guard railing, see Standard Plan A77B1.
3. For details of wood posts and wood blocks used to construct guard railing, see Standard Plan A77C1.
4. For additional installation details, see Standard Plan A77C3.
5. Guard railing post spacing to be 6'-3" center to center, except as otherwise noted.
6. For guard railing typical layouts, see the A77E, A77F and A77G Series of Standard Plans.
7. For terminal system end treatment details, see the A77L Series of Standard Plans. To connect railing to terminal system end treatment, transition the top of railing height at a ratio of 120:1 to terminal system end treatment height plus one 12'-6" standard railing section at the transitioned height for a horizontal connection to the end treatment.
8. For guard railing end anchor details, see Standard Plans A77H1 and A77I2.
9. For details of guard railing transition to bridge railing, see Standard Plan A77J4.
10. For additional details of guard railing connection to bridge railings, see Standard Plans A77J1, A77J2 and A77K1.
11. For guard railing connection details to abutments and walls, see Standard Plan A77J3.
12. Direction of adjacent traffic indicated by ➡.
13. For typical guard railing delineation and dike positioning details, see Standard Plan A77C4.
14. Slotted hole for bolted connection of rail element to block and post. See "Section Thru Rail Element".
15. Slotted holes for splice bolts to overlap ends of rail element. See "Section Thru Rail Element".
16. Additional hole in uppermost portion of line post is for potential future adjustments of railing height. See Standard Plan A77C1.
17. Install posts in soil.

STATE OF CALIFORNIA
DEPARTMENT OF TRANSPORTATION

METAL BEAM GUARD RAILING STANDARD RAILING SECTION (WOOD POST WITH WOOD BLOCK)

NO SCALE

RSP A77A1 DATED MAY 20, 2011 SUPERSEDES STANDARD PLAN A77A1 DATED MAY 1, 2006 - PAGE 41 OF THE STANDARD PLANS BOOK DATED MAY 2006.

REVISED STANDARD PLAN RSP A77A1

2006 REVISED STANDARD PLAN RSP A77A1

3-10-11

To accompany plans dated 6-4-12

DIST	COUNTY	ROUTE	POST MILES TOTAL PROJECT	SHEET NO.	TOTAL SHEETS
04	Ala,CC	4,80,84, 92,238,etc.	Var	104	141

Randell D. Hiatt
REGISTERED CIVIL ENGINEER

May 20, 2011
PLANS APPROVAL DATE

REGISTERED PROFESSIONAL ENGINEER
Randell D. Hiatt
No. C50200
Exp. 6-30-11
CIVIL
STATE OF CALIFORNIA

The State of California or its officers or agents shall not be responsible for the accuracy or completeness of electronic copies of this plan sheet.

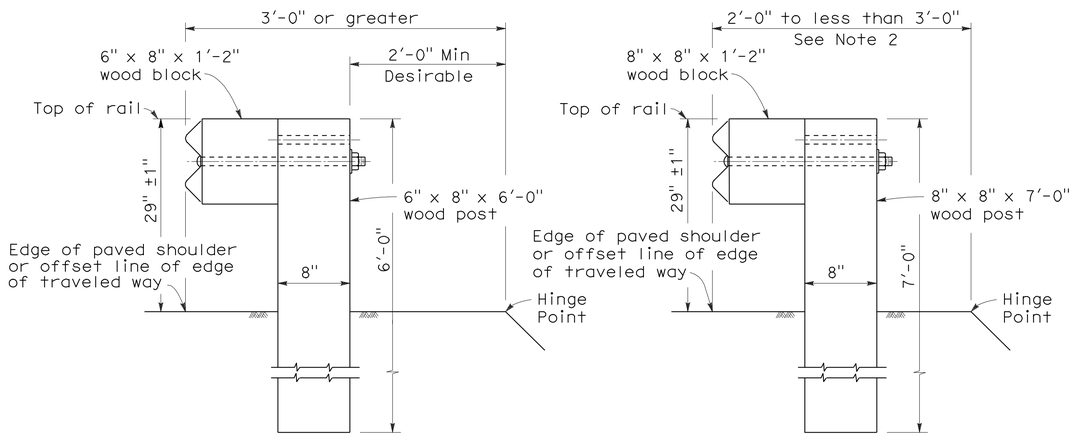

DETAIL A
TYPICAL ROADWAY INSTALLATION
See Note 1

DETAIL B
NARROW ROADWAY INSTALLATION
See Note 1

POST EMBEDMENT

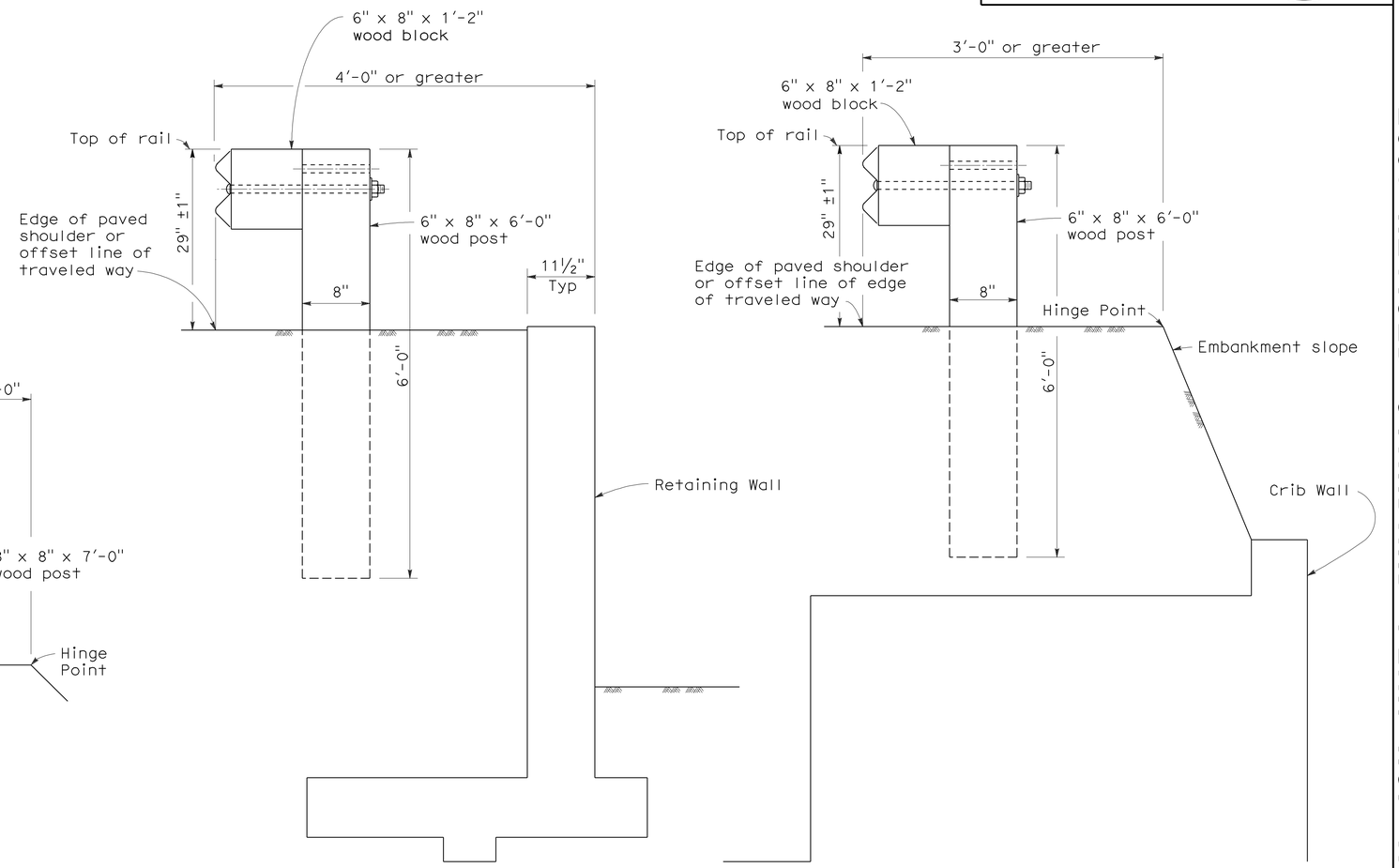

DETAIL C

DETAIL D

INSTALLATION AT EARTH RETAINING WALLS

NOTES:

1. These installation details also applicable to steel line post installations. For Detail A, C, and D, where steel line post installations are constructed, W6 x 9 steel post, 6'-0" in length, with 6" x 8" x 1'-2" notched wood blocks or notched recycled plastic blocks are to be used in place of the size of wood post and wood block shown. For Detail B, where steel line post installations are constructed, W6 x 9 steel post, 7'-0" in length, with 6" x 8" x 1'-2" notched wood blocks or notched recycled plastic blocks are to be used in place of the size of wood post and wood block shown. For additional installation details, see Standard Plans A77A1 and A77A2.
2. Where the distance between the face of the rail and the hinge point is less than 2'-0", see the Project Plans for special details.
3. For dike positioning with guard railing installations, see Standard Plan A77C4.

STATE OF CALIFORNIA
DEPARTMENT OF TRANSPORTATION

METAL BEAM GUARD RAILING TYPICAL LINE POST EMBEDMENT AND HINGE POINT OFFSET DETAILS

NO SCALE

RSP A77C3 DATED MAY 20, 2011 SUPERSEDES STANDARD PLAN A77C3
DATED MAY 1, 2006 - PAGE 46 OF THE STANDARD PLANS BOOK DATED MAY 2006.

REVISED STANDARD PLAN RSP A77C3

2006 REVISED STANDARD PLAN RSP A77C3

3-10-11

DIST	COUNTY	ROUTE	POST MILES TOTAL PROJECT	SHEET NO.	TOTAL SHEETS
04	Ala,CC	4,80,84, 92,238,*etc.*	Var	105	141

Randell D. Hiatt
REGISTERED CIVIL ENGINEER

May 20, 2011
PLANS APPROVAL DATE

REGISTERED PROFESSIONAL ENGINEER
Randell D. Hiatt
No. C50200
Exp. 6-30-11
CIVIL
STATE OF CALIFORNIA

The State of California or its officers or agents shall not be responsible for the accuracy or completeness of electronic copies of this plan sheet.

To accompany plans dated 6-4-12

NOTES:

1. When necessary to place dike in front of face of guard railing, only Type C dike may be used. For dike details, see Standard Plan A87B.
2. For standard railing post embedment, see Standard Plans A77C3.
3. Guard railing delineation to be used where shown on the Project Plans.
4. When dike or curb is placed under guard railing, the maximum height of the dike or curb shall be 4". Mountable dike should not be used. For dike and curb details, see Standard Plans A87A and A87B.
5. For details of typical distance between the face of rail and hinge point, see Standard Plan A77C3.
6. For steel line posts, use ¼ - 20 self-tapping screws in 0.22" diameter holes or ¼" bolts in 9/32" diameter holes.

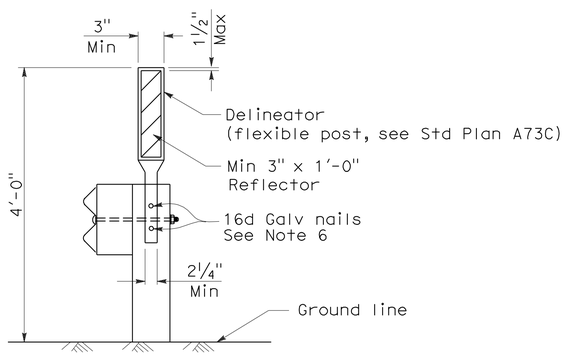

GUARD RAILING DELINEATION

See Note 3

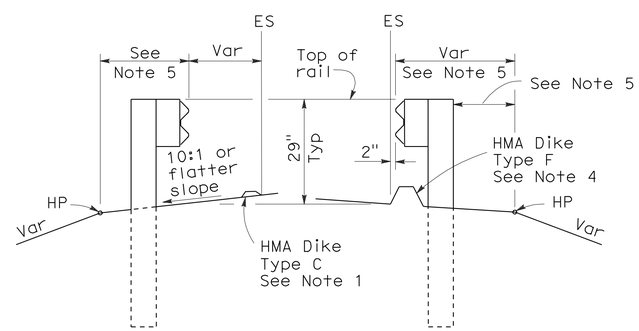

DIKE POSITIONING

See Note 1

STATE OF CALIFORNIA
DEPARTMENT OF TRANSPORTATION

METAL BEAM GUARD RAILING TYPICAL RAILING DELINEATION AND DIKE POSITIONING DETAILS

NO SCALE

RSP A77C4 DATED MAY 20, 2011 SUPERSEDES RSP A77C4 DATED JUNE 6, 2008 AND STANDARD PLAN A77C4 DATED MAY 1, 2006 - PAGE 47 OF THE STANDARD PLANS BOOK DATED MAY 2006.

REVISED STANDARD PLAN RSP A77C4

2006 REVISED STANDARD PLAN RSP A77C4

3-10-11

DIST	COUNTY	ROUTE	POST MILES TOTAL PROJECT	SHEET NO.	TOTAL SHEETS
04	Ala,CC	4,80,84, 92,238,etc.	Var	106	141

Randell D. Hiatt
REGISTERED CIVIL ENGINEER

October 20, 2006
PLANS APPROVAL DATE

REGISTERED PROFESSIONAL ENGINEER
Randell D. Hiatt
No. C50200
Exp. 6-30-07
CIVIL
STATE OF CALIFORNIA

The State of California or its officers or agents shall not be responsible for the accuracy or completeness of electronic copies of this plan sheet.

To accompany plans dated 6-4-12

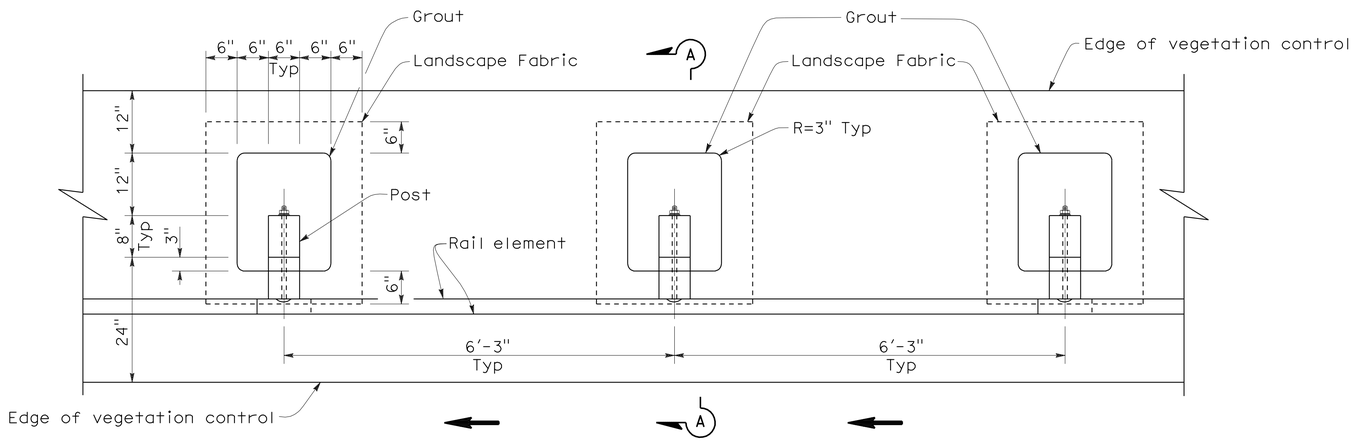

PLAN

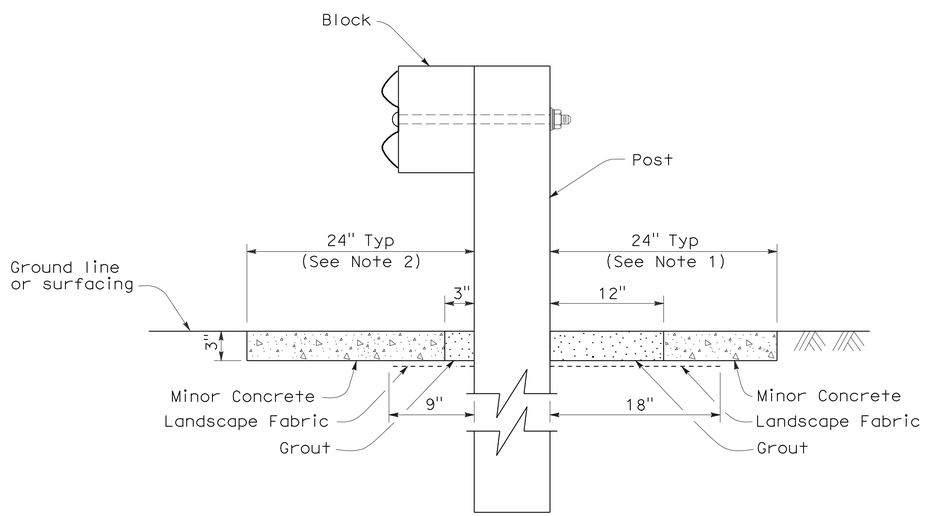

SECTION A-A

NOTES:

1. Where the distance between back of post and hinge point is less than 24", vegetation control to be constructed flush with the back edge of the post.
2. Where dike is constructed under railing, construct vegetation control to back edge of dike. Where paved shoulder is constructed within 24" in front of the post, construct vegetation control to the edge of paved shoulder.
3. Direction of adjacent traffic indicated by ← .

STATE OF CALIFORNIA
DEPARTMENT OF TRANSPORTATION

METAL BEAM GUARD RAILING TYPICAL VEGETATION CONTROL STANDARD RAILING SECTION

NO SCALE

NSP A77C5 DATED OCTOBER 20, 2006 SUPPLEMENTS THE STANDARD PLANS BOOK DATED MAY 2006.

NEW STANDARD PLAN NSP A77C5

2006 NEW STANDARD PLAN NSP A77C5

DIST	COUNTY	ROUTE	POST MILES TOTAL PROJECT	SHEET NO.	TOTAL SHEETS
04	Ala,CC	4,80,84, 92,238,etc.	Var	107	141

Randell D. Hiatt
REGISTERED CIVIL ENGINEER

October 20, 2006
PLANS APPROVAL DATE

REGISTERED PROFESSIONAL ENGINEER
Randell D. Hiatt
No. C50200
Exp. 6-30-07
CIVIL
STATE OF CALIFORNIA

The State of California or its officers or agents shall not be responsible for the accuracy or completeness of electronic copies of this plan sheet.

To accompany plans dated 6-4-12

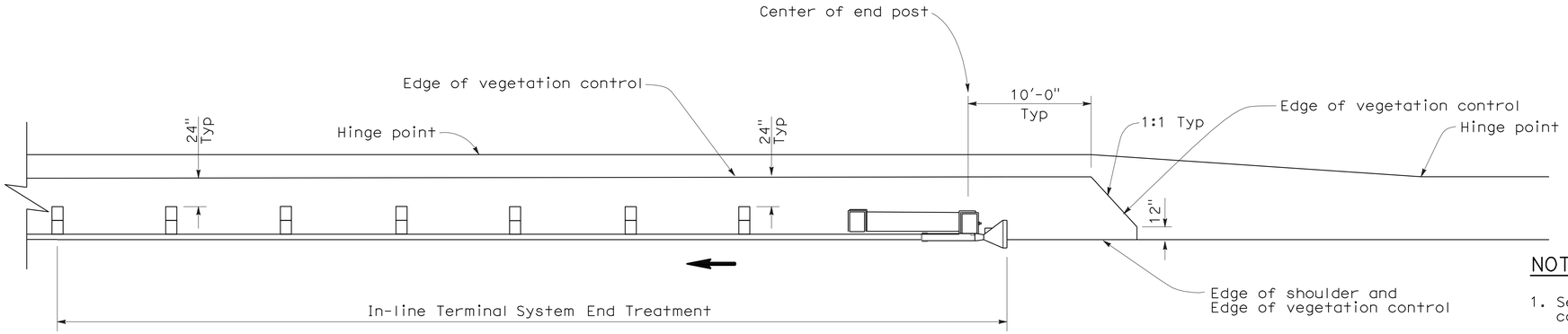

PLAN

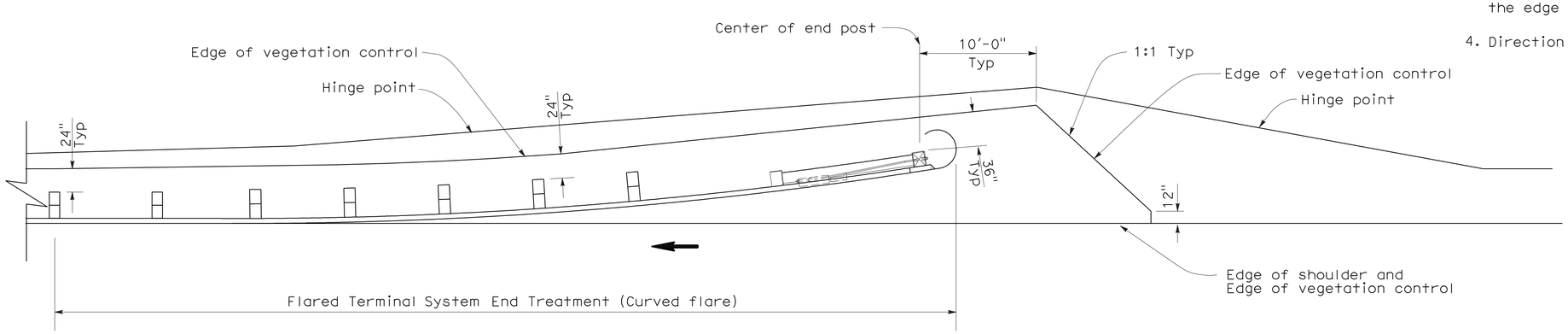

PLAN

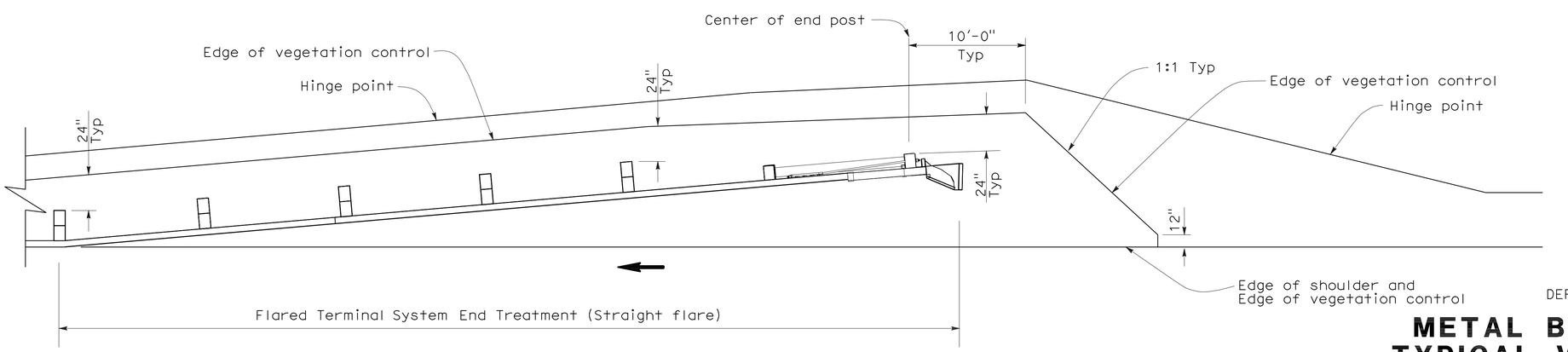

PLAN

NOTES:

1. See New Standard Plan NSP A77C5 for additional vegetation control details.
2. Where the distance between back of post and hinge point is less than 24", vegetation control to be constructed flush with the back edge of the post.
3. Where dike is constructed under railing, construct vegetation control to back edge of dike. Where paved shoulder is constructed within 24" in front of the post, construct vegetation control to the edge of paved shoulder.
4. Direction of adjacent traffic indicated by ←.

STATE OF CALIFORNIA
DEPARTMENT OF TRANSPORTATION

METAL BEAM GUARD RAILING TYPICAL VEGETATION CONTROL FOR TERMINAL SYSTEM END TREATMENTS

NO SCALE

NSP A77C6 DATED OCTOBER 20, 2006 SUPPLEMENTS THE STANDARD PLANS BOOK DATED MAY 2006.

NEW STANDARD PLAN NSP A77C6

2006 NEW STANDARD PLAN NSP A77C6

7-17-06

DIST	COUNTY	ROUTE	POST MILES TOTAL PROJECT	SHEET NO.	TOTAL SHEETS
04	Ala,CC	4,80,84, 92,238,etc.	Var	108	141

Randell D. Hiatt
REGISTERED CIVIL ENGINEER

October 20, 2006
PLANS APPROVAL DATE

REGISTERED PROFESSIONAL ENGINEER
Randell D. Hiatt
No. C50200
Exp. 6-30-07
CIVIL
STATE OF CALIFORNIA

The State of California or its officers or agents shall not be responsible for the accuracy or completeness of electronic copies of this plan sheet.

To accompany plans dated 6-4-12

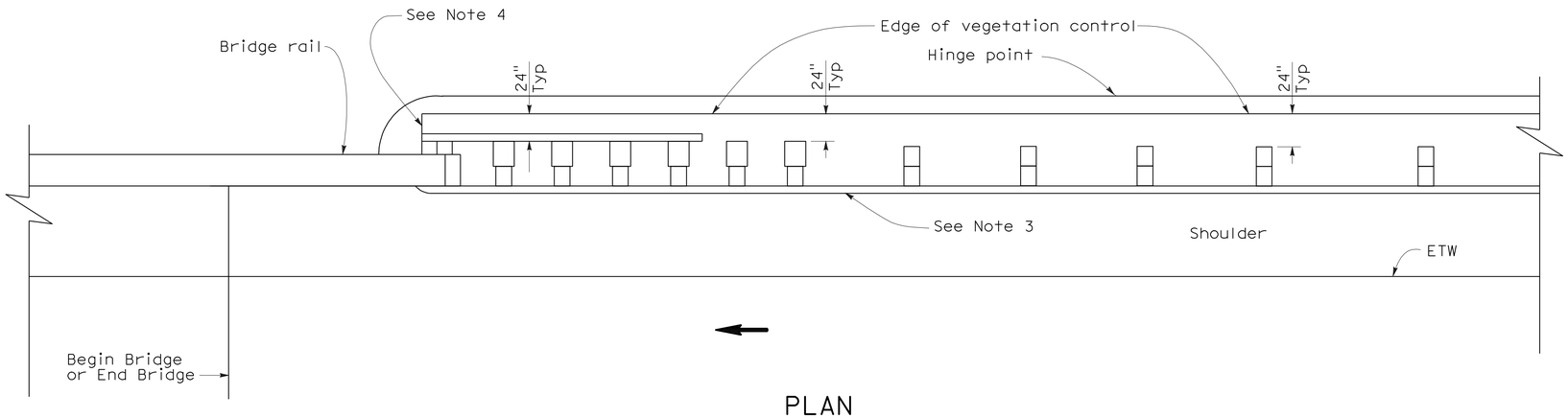

PLAN

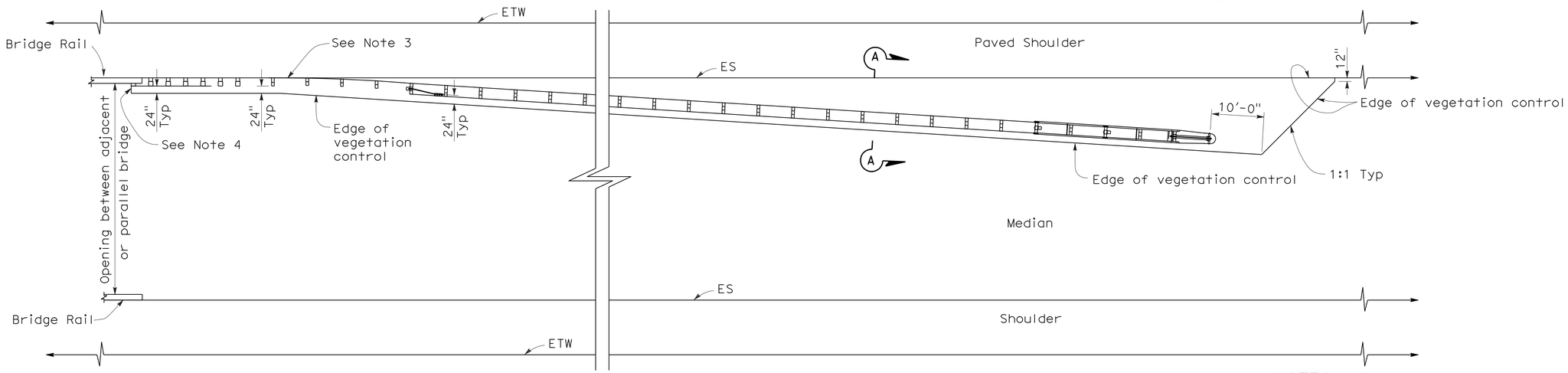

PLAN

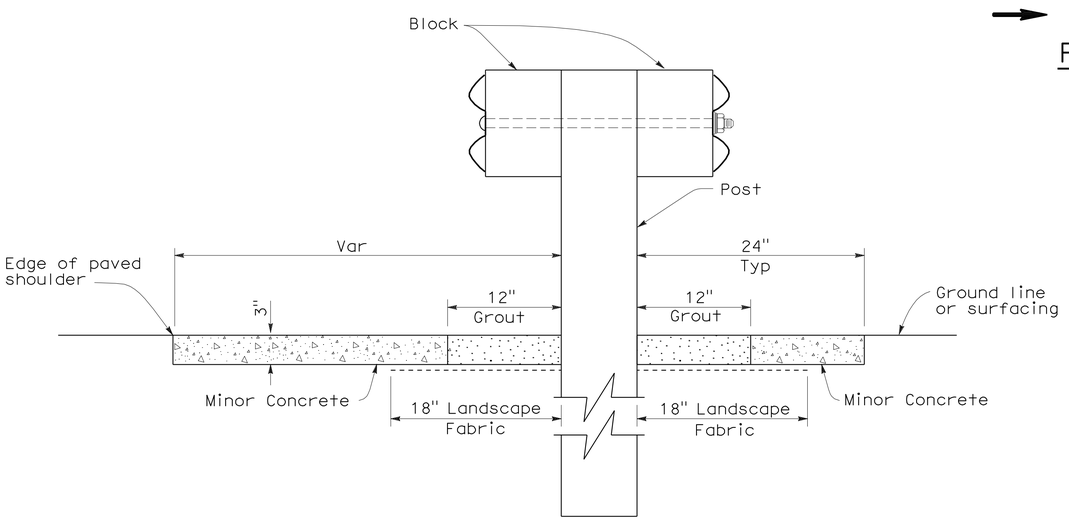

SECTION A-A

NOTES:

1. See New Standard Plan NSP A77C5 for additional vegetation control details.
2. Where the distance between back of post and hinge point is less than 24", vegetation control to be constructed flush with the back edge of the post.
3. Where dike is constructed under railing, construct vegetation control to back edge of dike. Where paved shoulder is constructed within 24" in front of the post, construct vegetation control to the edge of paved shoulder.
4. End vegetation control at end of backside rail element.
5. Direction of adjacent traffic indicated by ←.

STATE OF CALIFORNIA
DEPARTMENT OF TRANSPORTATION

METAL BEAM GUARD RAILING TYPICAL VEGETATION CONTROL AT STRUCTURE APPROACH AND DEPARTURE

NO SCALE

NSP A77C7 DATED OCTOBER 20, 2006 SUPPLEMENTS THE STANDARD PLANS BOOK DATED MAY 2006.

NEW STANDARD PLAN NSP A77C7

2006 NEW STANDARD PLAN NSP A77C7

7-17-06

DIST	COUNTY	ROUTE	POST MILES TOTAL PROJECT	SHEET NO.	TOTAL SHEETS
04	Ala,CC	4,80,84, 92,238,*etc.*	Var	109	141

Randell D. Hiatt
REGISTERED CIVIL ENGINEER

October 20, 2006
PLANS APPROVAL DATE

REGISTERED PROFESSIONAL ENGINEER
Randell D. Hiatt
No. C50200
Exp. 6-30-07
CIVIL
STATE OF CALIFORNIA

The State of California or its officers or agents shall not be responsible for the accuracy or completeness of electronic copies of this plan sheet.

To accompany plans dated 6-4-12

NOTES:

1. See New Standard Plan NSP A77C5 for additional vegetation control details.
2. Where the distance between back of post and hinge point is less than 24", vegetation control to be constructed flush with the back edge of the post.
3. Where dike is constructed under railing, construct vegetation control to back edge of dike. Where paved shoulder is constructed within 24" in front of the post, construct vegetation control to the edge of paved shoulder.
4. Direction of adjacent traffic indicated by ←.

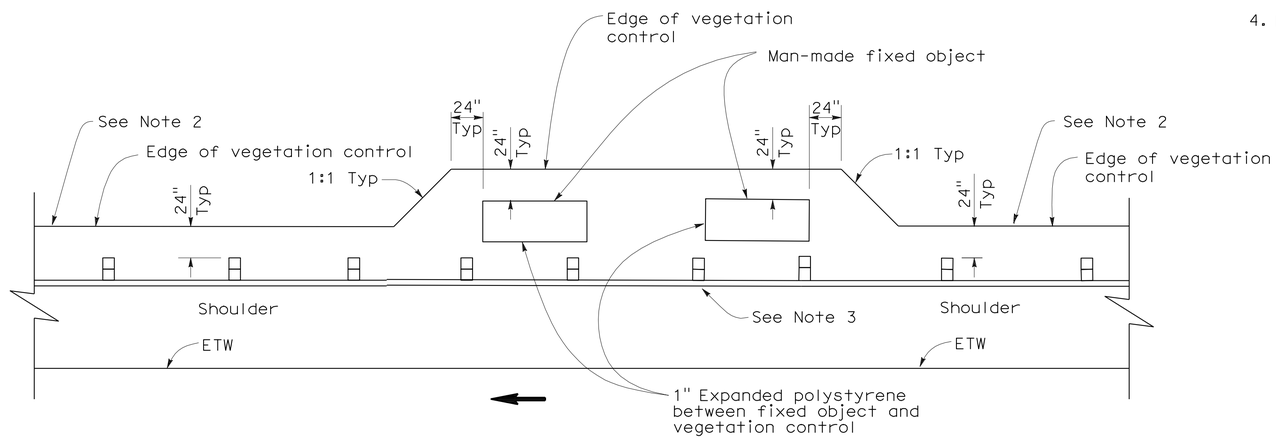

PLAN

FIXED OBJECT(S) ON SHOULDER

STATE OF CALIFORNIA
DEPARTMENT OF TRANSPORTATION

METAL BEAM GUARD RAILING TYPICAL VEGETATION CONTROL AT FIXED OBJECT

NO SCALE

NSP A77C8 DATED OCTOBER 20, 2006 SUPPLEMENTS THE STANDARD PLANS BOOK DATED MAY 2006.

NEW STANDARD PLAN NSP A77C8

2006 NEW STANDARD PLAN NSP A77C8

7-17-06

DIST	COUNTY	ROUTE	POST MILES TOTAL PROJECT	SHEET NO.	TOTAL SHEETS
04	Ala,CC	4,80,84, 92,238,etc.	Var	110	141

Randell D. Hiatt
REGISTERED CIVIL ENGINEER

June 6, 2008
PLANS APPROVAL DATE

REGISTERED PROFESSIONAL ENGINEER
Randell D. Hiatt
No. C50200
Exp. 6-30-09
CIVIL
STATE OF CALIFORNIA

The State of California or its officers or agents shall not be responsible for the accuracy or completeness of electronic copies of this plan sheet.

To accompany plans dated 6-4-12

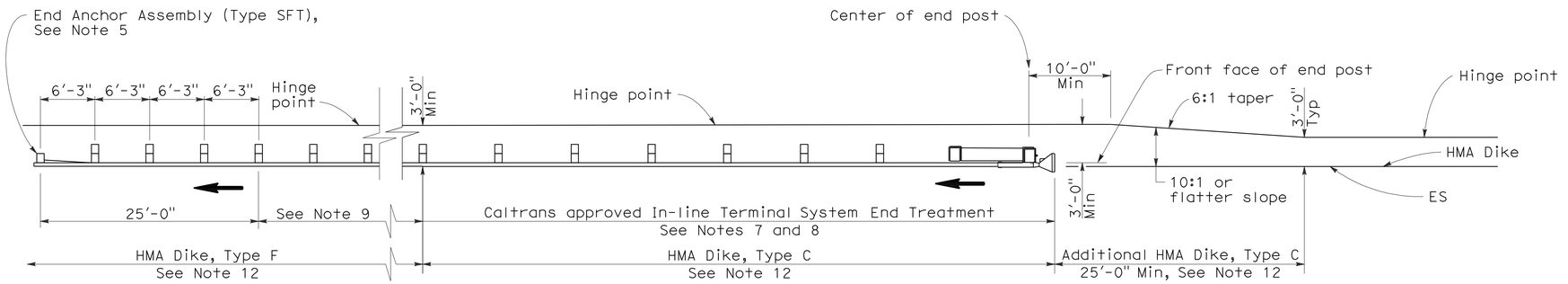

TYPE 11A LAYOUT

(EMBANKMENT GUARD INSTALLATION WITH IN-LINE END TREATMENT AT TRAFFIC APPROACH END OF RAILING)
See Note 6

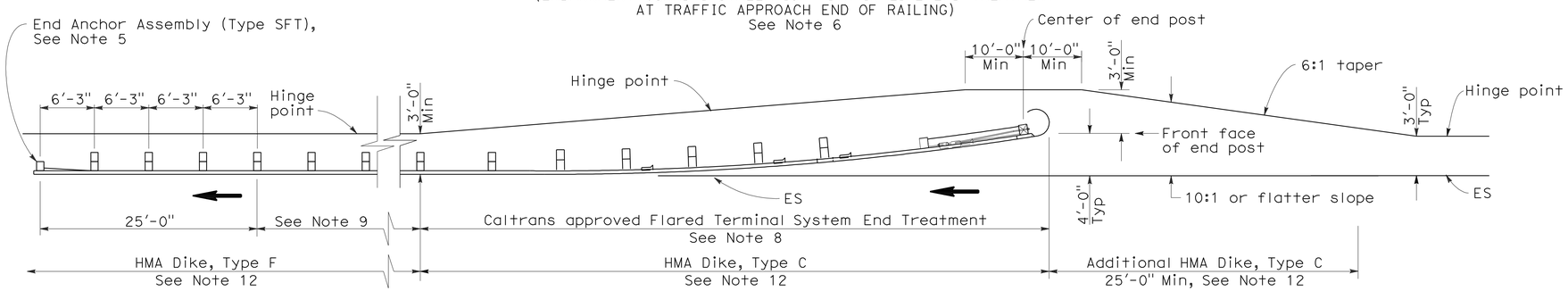

TYPE 11B LAYOUT

(EMBANKMENT GUARD RAILING INSTALLATION WITH FLARED END TREATMENT AT TRAFFIC APPROACH END OF RAILING)
See Note 6

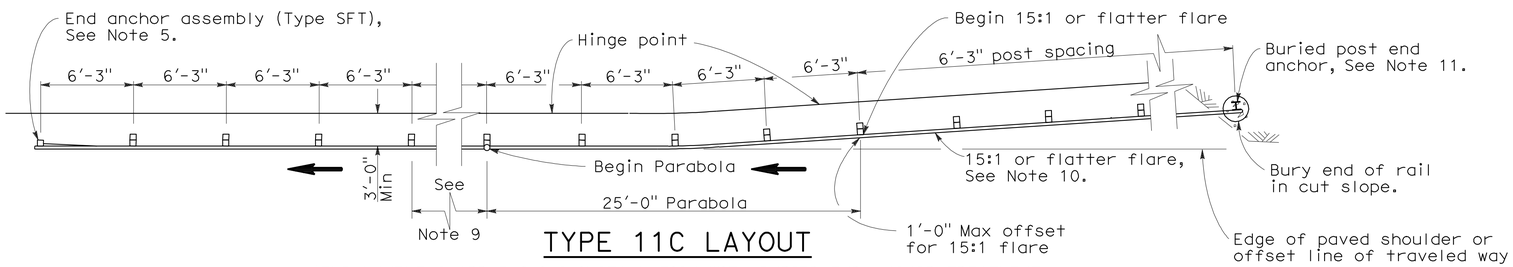

TYPE 11C LAYOUT

(EMBANKMENT GUARD RAILING INSTALLATION WITH BURIED END ANCHOR TREATMENT AT TRAFFIC APPROACH END OF RAILING)
See Notes 6 and 12

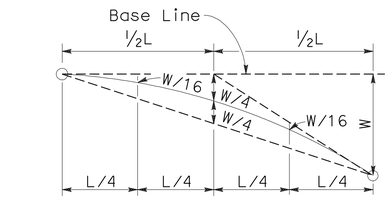

TYPICAL PARABOLIC LAYOUT

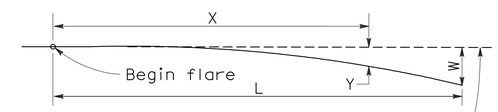

Base Line (Edge of paved shoulder or offset line of edge of traveled way)

$$Y = \frac{WX^2}{L^2}$$

Y = Offset from base line
W = Maximum offset
X = Distance along base line
L = Length of flare

PARABOLIC FLARE OFFSETS

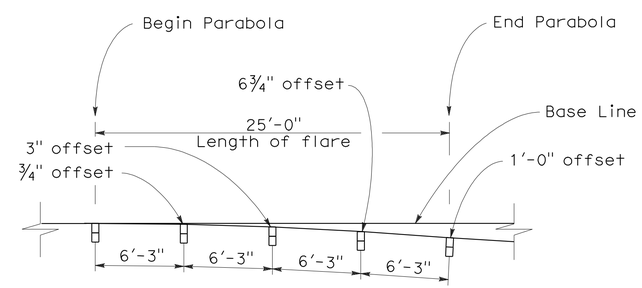

TYPICAL FLARE OFFSETS FOR 1 FOOT MAX END OFFSET

NOTES:

1. Line post, blocks and hardware to be used are shown on Standard Plans A77A1, A77A2, A77B1, A77C1, and A77C2.
2. Guard rail post spacing to be 6'-3" center to center, except as otherwise noted.
3. Except as noted, line posts are 6" x 8" x 6'-0" wood with 6" x 8" x 1'-2" wood blocks. W6 x 9 steel posts, 6'-0" in length, with 6" x 8" x 1'-2" notched wood blocks or recycled plastic blocks may be used for 6" x 8" x 6'-0" wood post with 6" x 8" x 1'-2" wood blocks where applicable and when specified.
4. Direction of adjacent traffic indicated by ⟶.
5. For End Anchor Assembly (Type SFT) details, see Standard Plan A77H1.
6. Layout Types 11A, 11B or 11C are typically used where guard railing is recommended to shield embankment slopes and a crashworthy end treatment is required for only one direction of traffic.
7. In-line Terminal System End Treatments are used where site conditions will not accommodate a flared end treatment.
8. The type of terminal system end treatment to be used will be shown on the Project Plans.
9. Dependent on site conditions (embankment height and side slope), construction of additional guard railing (length equal to multiples of 12'-6" with 6'-3" post spacing) may be advisable.
10. The 15:1 or flatter flare used with buried end anchors is based on the edge of the paved shoulder or offset line of edge of the traveled way. The length of guard railing within the 15:1 or flatter flare is based on site conditions and should be a length equal to multiples of 12'-6".
11. For details of the buried post end anchor used with Type 11C Layout, see Standard Plan A77I2.
12. Where placement of dike is required with guard railing installations, see Revised Standard Plan RSP A77C4 for dike positioning details.

STATE OF CALIFORNIA
DEPARTMENT OF TRANSPORTATION

METAL BEAM GUARD RAILING TYPICAL LAYOUTS FOR EMBANKMENTS

NO SCALE

RSP A77E1 DATED JUNE 6, 2008 SUPERSEDES STANDARD PLAN A77E1
DATED MAY 1, 2006 - PAGE 48 OF THE STANDARD PLANS BOOK DATED MAY 2006.

REVISED STANDARD PLAN RSP A77E1

2006 REVISED STANDARD PLAN RSP A77E1

12-10-07

DIST	COUNTY	ROUTE	POST MILES TOTAL PROJECT	SHEET NO.	TOTAL SHEETS
04	Ala,CC	4,80,84, 92,238,etc.	Var	111	141

Randell D. Hiatt
REGISTERED CIVIL ENGINEER

June 6, 2008
PLANS APPROVAL DATE

REGISTERED PROFESSIONAL ENGINEER
Randell D. Hiatt
No. C50200
Exp. 6-30-09
CIVIL
STATE OF CALIFORNIA

The State of California or its officers or agents shall not be responsible for the accuracy or completeness of electronic copies of this plan sheet.

To accompany plans dated 6-4-12

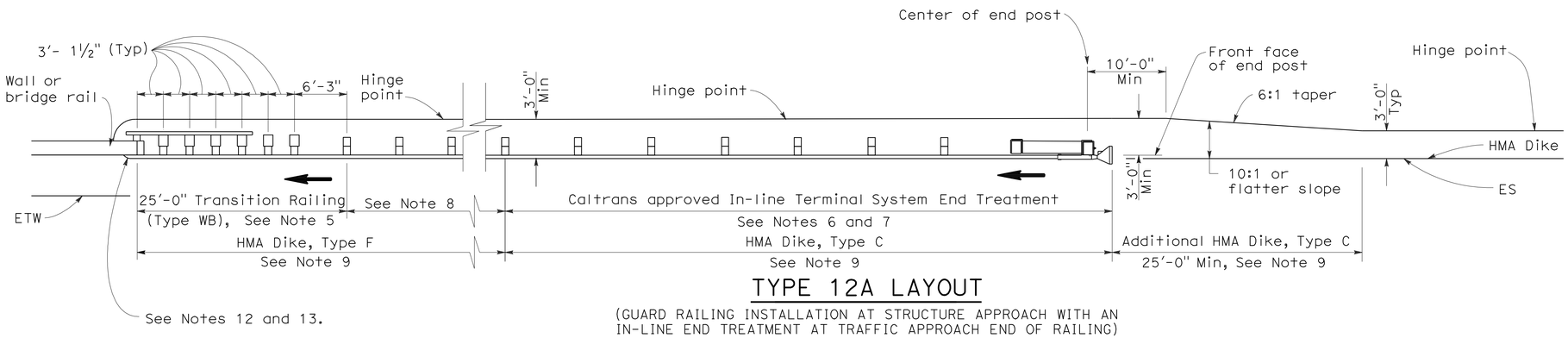

TYPE 12A LAYOUT

(GUARD RAILING INSTALLATION AT STRUCTURE APPROACH WITH AN IN-LINE END TREATMENT AT TRAFFIC APPROACH END OF RAILING)
See Notes 10

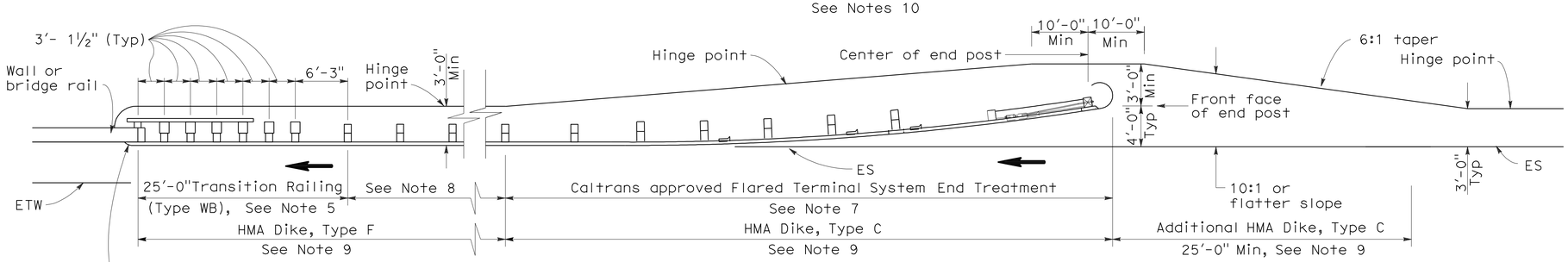

TYPE 12B LAYOUT

(GUARD RAILING INSTALLATION AT STRUCTURE APPROACH WITH A FLARED END TREATMENT AT TRAFFIC APPROACH END OF RAILING)
See Notes 10

NOTES:

1. Line post, blocks and hardware to be used are shown on Standard Plans A77A1, A77A2, A77B1, A77C1 and A77C2.
2. Guard rail post spacing to be 6'-3" center to center, except as otherwise noted.
3. Except as noted, line posts are 6" x 8" x 6'-0" wood with 6" x 8" x 1'-2" wood blocks. W6 x 9 steel posts, 6'-0" in length, with 6" x 8" x 1'-2" notched wood blocks or plastic blocks may be used for 6" x 8" x 6'-0" wood posts with 6" x 8" x 1'-2" wood blocks where applicable and when specified.
4. Direction of adjacent traffic indicated by ➡.
5. For Transition Railing (Type WB) details for Types 12A and 12B Layouts, see Standard Plan A77J4.
6. In-line Terminal System End Treatments are used where site conditions will not accommodate a flared end treatment.
7. The type of terminal system end treatment to be used will be shown on the Project Plans.
8. Dependent on site conditions (embankment height, side slopes, or other fixed objects), it may be advisable to construct additional guard railing (a length equal to multiples of 12'-6" with 6'-3" post spacing) between the transition railing and end treatment.
9. Where placement of dike is required with guard railing installations, see Revised Standard Plan RSP A77C4 for dike positioning details.
10. Type 12A or Type 12B Layouts are typically used:
    a. To the right of approaching traffic, at the end of a structure, on two-lane conventional highway where the roadbed width across the structure is less than 40 feet.
    b. To the left of approaching traffic, at the end of a structure, on two-lane conventional highway where the roadbed width across the structure is less than 40 feet.
    c. To the right of approaching traffic at the end of each structure on multilane freeways or expressways with separate adjacent or parallel bridges.
    d. To the right of approaching traffic at the end of the structure on multilane freeways or expressways with decked median on the bridge.
11. See Revised Standard Plan RSP A77F3 for typical layout used left of approaching traffic at the ends of each structure on multilane freeways or expressways with separate adjacent or parallel bridges.
12. For additional details of typical connections to bridge rail, see Connection Detail AA on Revised Standard Plans RSP A77J1 and RSP A77J2 and Connection Detail FF on Standard Plans A77K1 and A77K2.
13. For additional details of a typical connection to walls or abutments, see Standard Plan A77J3.

STATE OF CALIFORNIA
DEPARTMENT OF TRANSPORTATION

METAL BEAM GUARD RAILING TYPICAL LAYOUTS FOR STRUCTURE APPROACH

NO SCALE

RSP A77F1 DATED JUNE 6, 2008 SUPERSEDES STANDARD PLAN A77F1
DATED MAY 1, 2006 - PAGE 54 OF THE STANDARD PLANS BOOK DATED MAY 2006.

REVISED STANDARD PLAN RSP A77F1

2006 REVISED STANDARD PLAN RSP A77F1

12-10-07

DIST	COUNTY	ROUTE	POST MILES TOTAL PROJECT	SHEET NO.	TOTAL SHEETS
04	Ala,CC	4,80,84, 92,238,etc.	Var	112	141

Randell D. Hiatt
REGISTERED CIVIL ENGINEER

June 6, 2008
PLANS APPROVAL DATE

REGISTERED PROFESSIONAL ENGINEER
Randell D. Hiatt
No. C50200
Exp. 6-30-09
CIVIL
STATE OF CALIFORNIA

The State of California or its officers or agents shall not be responsible for the accuracy or completeness of electronic copies of this plan sheet.

To accompany plans dated 6-4-12

2006 REVISED STANDARD PLAN RSP A77G3

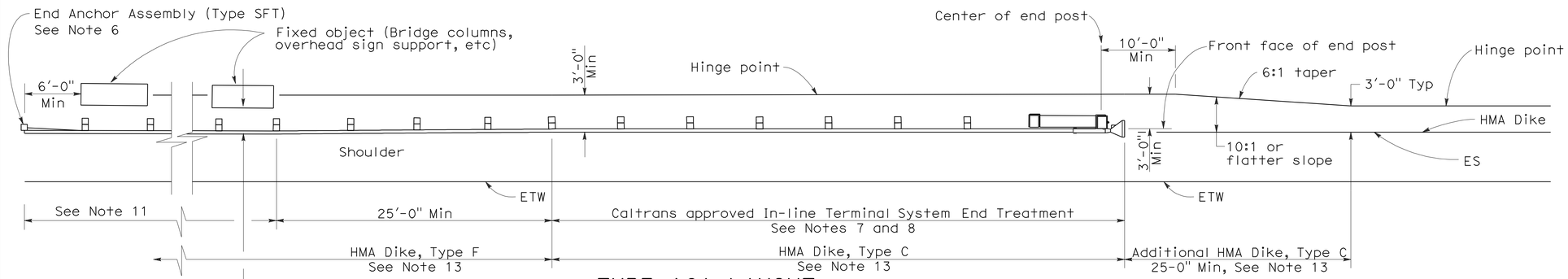

TYPE 16A LAYOUT

(GUARD RAILING INSTALLATION AT ROADSIDE FIXED OBJECT OR OBJECTS WITH AN IN-LINE END TREATMENT AT TRAFFIC APPROACH END OF RAILING)
See Notes 12 and 13

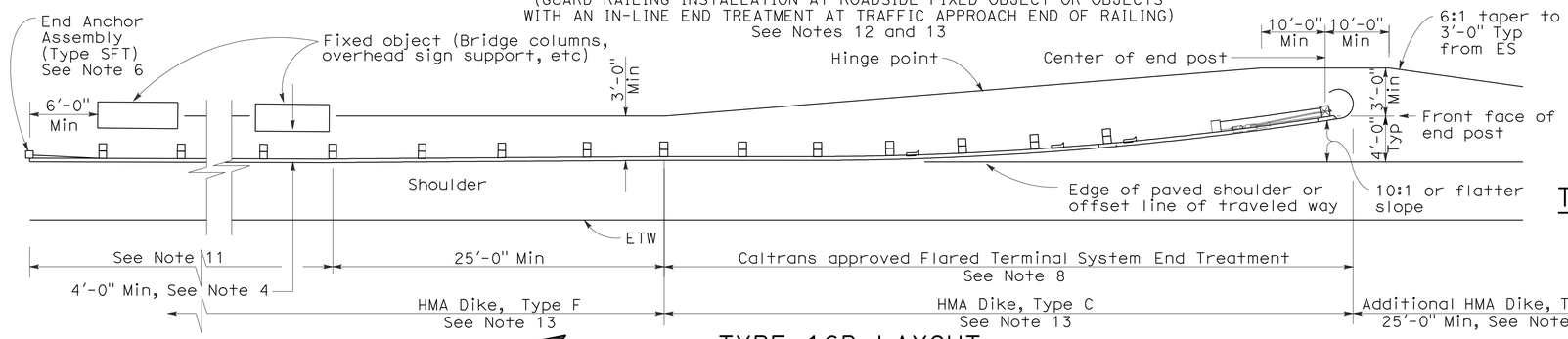

TYPE 16B LAYOUT

(GUARD RAILING INSTALLATION AT ROADSIDE FIXED OBJECT OR OBJECTS WITH A FLARED END TREATMENT AT TRAFFIC APPROACH END OF RAILING)
See Notes 12 and 13

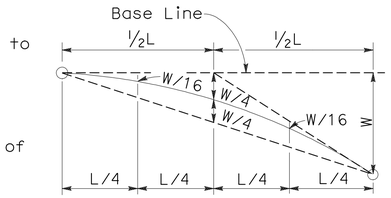

TYPICAL PARABOLIC LAYOUT

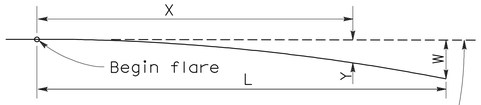

Base Line (Edge of paved shoulder or offset line of edge of traveled way)

$$Y = \frac{WX^2}{L^2}$$

Y = Offset from base line
W = Maximum offset
X = Distance along base line
L = Length of flare

PARABOLIC FLARE OFFSETS

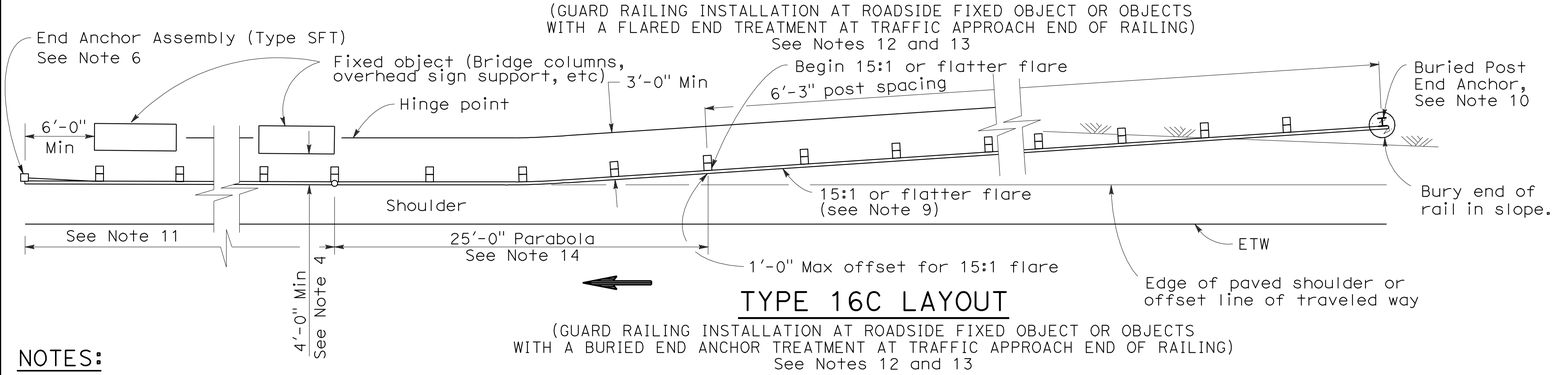

TYPE 16C LAYOUT

(GUARD RAILING INSTALLATION AT ROADSIDE FIXED OBJECT OR OBJECTS WITH A BURIED END ANCHOR TREATMENT AT TRAFFIC APPROACH END OF RAILING)
See Notes 12 and 13

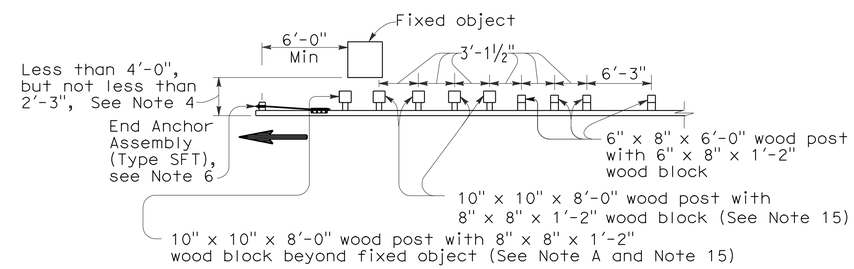

NOTE A: For a series of fixed objects (bridge columns, overhead sign supports, etc.) additional 10" x 10" x 8'-0" wood post with 8" x 8" x 1'-2" wood blocks at 3'-1½" center to center spacing are to be used between fixed objects.

STRENGTHENED RAILING SECTIONS FOR FIXED OBJECT

Use strengthened railing sections with Types 16A, 16B or 16C Layouts where minimum clearance between the face of the guard railing and fixed object(s) is less than 4'-0", but not less than 2'-3". See Note 4

NOTES:

1. Line post, blocks and hardware to be used are shown on Revised Standard Plans A77A1, A77A2, A77B1, A77C1 and A77C2.
2. Guard railing post spacing to be 6'-3" center to center, except as otherwise noted.
3. Except as noted, line posts are 6" x 8" x 6'-0" wood with 6" x 8" x 1'-2" wood blocks. W6 x 9 steel posts, 6'-0" in length, with 6" x 8" x 1'-2" notched wood blocks or notched recycled plastic blocks may be used for 6" x 8" x 6'-0" wood line posts with 6" x 8" x 1'-2" wood blocks where applicable and when specified.
4. A 4'-0" minimum clearance is required between the face of the railing and the face of a fixed object located directly behind standard guard railing sections with post spacing of 6'-3". Construct guard railing as shown in the detail "Strengthened Railing Sections for Fixed Objects" on this plan, where the clearance between the face of the railing and the face of a fixed object is less than 4'-0", but not less than 2'-3". Where the clearance is less than 2'-3", a concrete wall or barrier should be constructed to shield the fixed object(s).
5. Direction of adjacent traffic indicated by ⟶.
6. For End Anchor Assembly (Type SFT) details, see Standard Plan A77H1.
7. In-line Terminal System End Treatments are used where site conditions will not accommodate a flared end treatment.
8. The type of terminal system to be used will be shown on the Project Plans.
9. The 15:1 or flatter flare used with Type 16C Layout is based on the edge of the paved shoulder or offset line of edge of the traveled way. The length of guard railing within the 15:1 or flatter flare is based on site conditions and should be a length equal to multiples of 12'-6".
10. For details of the Buried Post End Anchor used with Type 16C Layout, see Standard Plan A77I2.
11. As site conditions dictate, construct additional guard railing to shield fixed object(s). Additional guard railing length equal to multiples of 12'-6". Post spacing at 6'-3" except as specified in Note 4.
12. Layout Types 16A, 16B or 16C are typically used where guard railing is recommended to shield roadside fixed object(s) and a crashworthy end treatment is required for only one direction of traffic.
13. Where placement of dike is required with guard railing, see Revised Standard Plan RSP A77C4 for dike positioning details.
14. For typical flare offsets for 25'-0" length parabola with maximum offset of 1'-0", see Revised Standard Plan RSP A77E1.
15. W6 x 15 steel post, 8'-0" in length, with 8" x 8" x 1'-2" notched wood block or notched recycled plastic blocks may be used in place of the 10" x 10" x 8'-0" wood post with 8" x 8" x 1'-2" wood block shown in the "Strengthened Railing Sections Detail".

STATE OF CALIFORNIA
DEPARTMENT OF TRANSPORTATION

METAL BEAM GUARD RAILING TYPICAL LAYOUTS FOR ROADSIDE FIXED OBJECTS

NO SCALE

RSP A77G3 DATED JUNE 6, 2008 SUPERSEDES STANDARD PLAN A77G3 DATED MAY 1, 2006 - PAGE 61 OF THE STANDARD PLANS BOOK DATED MAY 2006.

REVISED STANDARD PLAN RSP A77G3

12-10-07

DIST	COUNTY	ROUTE	POST MILES TOTAL PROJECT	SHEET NO.	TOTAL SHEETS
04	Ala,CC	4,80,84, 92,238,etc.	Var	113	141

Randell D. Hiatt
REGISTERED CIVIL ENGINEER

May 20, 2011
PLANS APPROVAL DATE

REGISTERED PROFESSIONAL ENGINEER
Randell D. Hiatt
No. C50200
Exp. 6-30-11
CIVIL
STATE OF CALIFORNIA

The State of California or its officers or agents shall not be responsible for the accuracy or completeness of electronic copies of this plan sheet.

To accompany plans dated 6-4-12

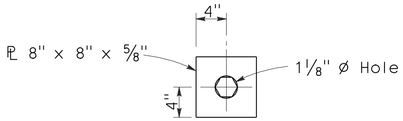

DETAIL A
CABLE CONNECTION
END PLATE

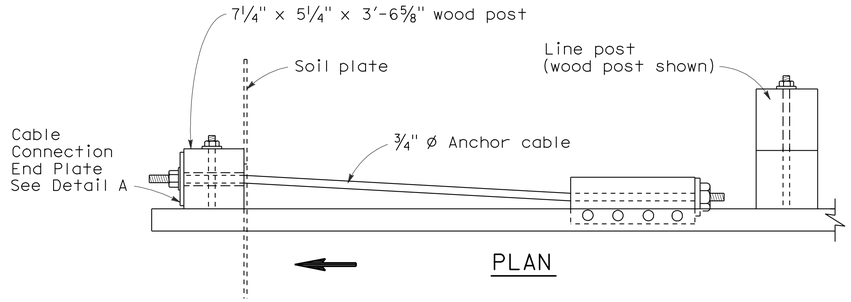

PLAN

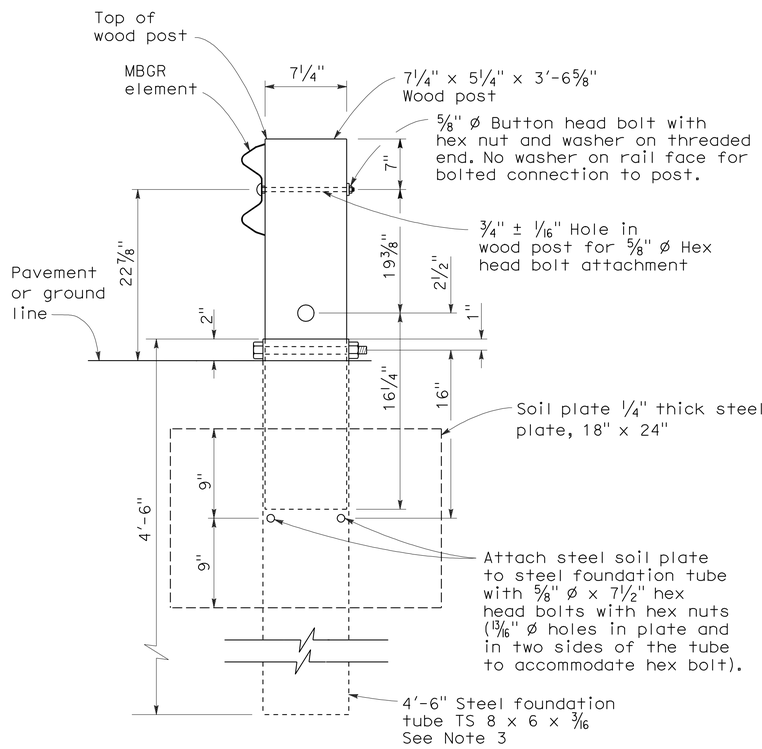

SECTION A-A

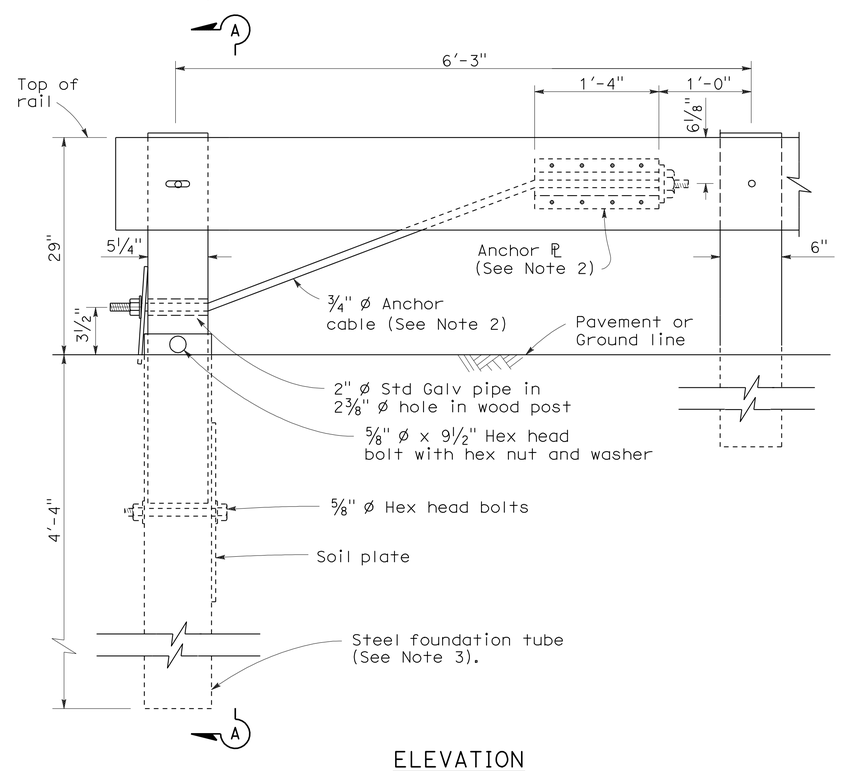

ELEVATION
END ANCHOR
ASSEMBLY (TYPE SFT)
See Note 1

NOTES:

1. See the A77E, A77F and A77G series of Standard Plans for typical use of End Anchor Assembly (Type SFT).
2. For details of the anchor plate and 3/4" cable, see Standard Plan A77H3.
3. A 6'-0" length steel foundation tube, TS 8 x 6 x 3/16, without a soil plate, may be furnished and installed in place of the 4'-6" length steel foundation tube and soil plate shown. Minimum embedment of the 6'-0" length tube shall be 5'-9". A 5/8" Ø hex head bolt and nut shall be installed in the hole in the 6'-0" length tube to keep the wood post from dropping into the tube.
4. Direction of traffic indicated by ⟹.
5. Install line post, steel foundation tube and soil plate in soil.

STATE OF CALIFORNIA
DEPARTMENT OF TRANSPORTATION

METAL RAILING END ANCHOR ASSEMBLY (TYPE SFT)

NO SCALE

RSP A77H1 DATED MAY 20, 2011 SUPERSEDES STANDARD PLAN A77H1
DATED MAY 1, 2006 - PAGE 67 OF THE STANDARD PLANS BOOK DATED MAY 2006.

REVISED STANDARD PLAN RSP A77H1

2006 REVISED STANDARD PLAN RSP A77H1

2-10-07

DIST	COUNTY	ROUTE	POST MILES TOTAL PROJECT	SHEET NO.	TOTAL SHEETS
04	Ala,CC	4,80,84, 92,238,etc.	Var	114	141

Randell D. Hiatt
REGISTERED CIVIL ENGINEER

May 20, 2011
PLANS APPROVAL DATE

REGISTERED PROFESSIONAL ENGINEER
Randell D. Hiatt
No. C50200
Exp. 6-30-11
CIVIL
STATE OF CALIFORNIA

The State of California or its officers or agents shall not be responsible for the accuracy or completeness of electronic copies of this plan sheet.

To accompany plans dated 6-4-12

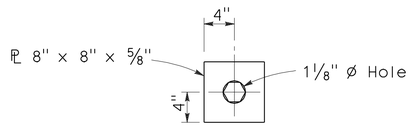

DETAIL A
CABLE CONNECTION
END PLATE

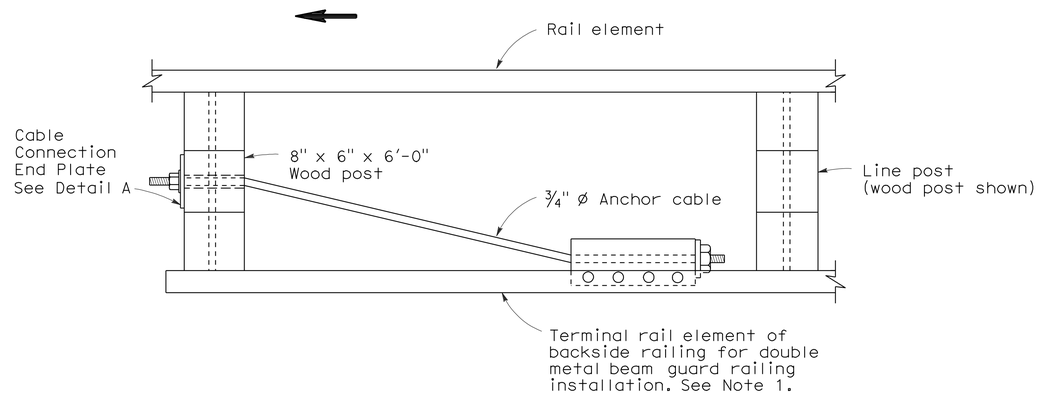

PLAN

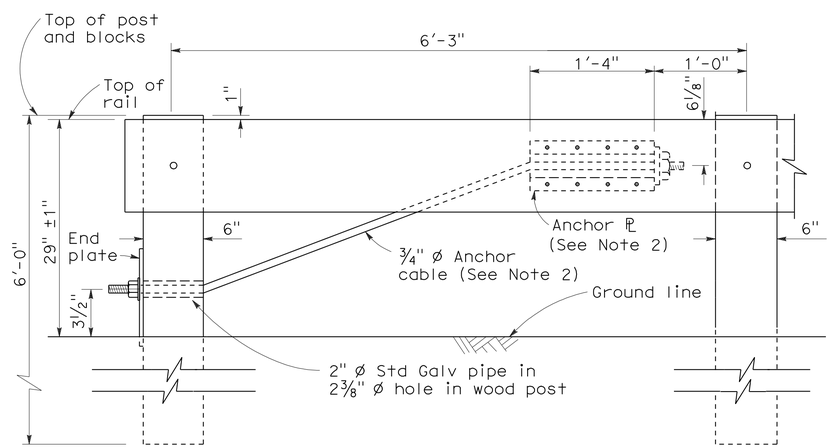

ELEVATION
RAIL TENSIONING
ASSEMBLY
See Note 1

NOTES:

1. See Standard Plan A77F3 and Standard Plan A77G1 for typical use of rail tensioning assembly.
2. For details of the anchor plate and 3/4" cable, see Standard Plan A77H3.
3. Direction of traffic indicated by ⟶.

STATE OF CALIFORNIA
DEPARTMENT OF TRANSPORTATION

METAL RAILING
RAIL TENSIONING ASSEMBLY

NO SCALE

RSP A77H2 DATED MAY 20, 2011 SUPERSEDES STANDARD PLAN A77H2
DATED MAY 1, 2006 - PAGE 68 OF THE STANDARD PLANS BOOK DATED MAY 2006.

REVISED STANDARD PLAN RSP A77H2

2006 REVISED STANDARD PLAN RSP A77H2

3-10-11

DIST	COUNTY	ROUTE	POST MILES TOTAL PROJECT	SHEET NO.	TOTAL SHEETS
04	Ala,CC	4,80,84, 92,238,etc.	Var	115	141

Randell D. Hiatt
REGISTERED CIVIL ENGINEER

June 6, 2008
PLANS APPROVAL DATE

REGISTERED PROFESSIONAL ENGINEER
Randell D. Hiatt
No. C50200
Exp. 6-30-09
CIVIL
STATE OF CALIFORNIA

The State of California or its officers or agents shall not be responsible for the accuracy or completeness of electronic copies of this plan sheet.

To accompany plans dated 6-4-12

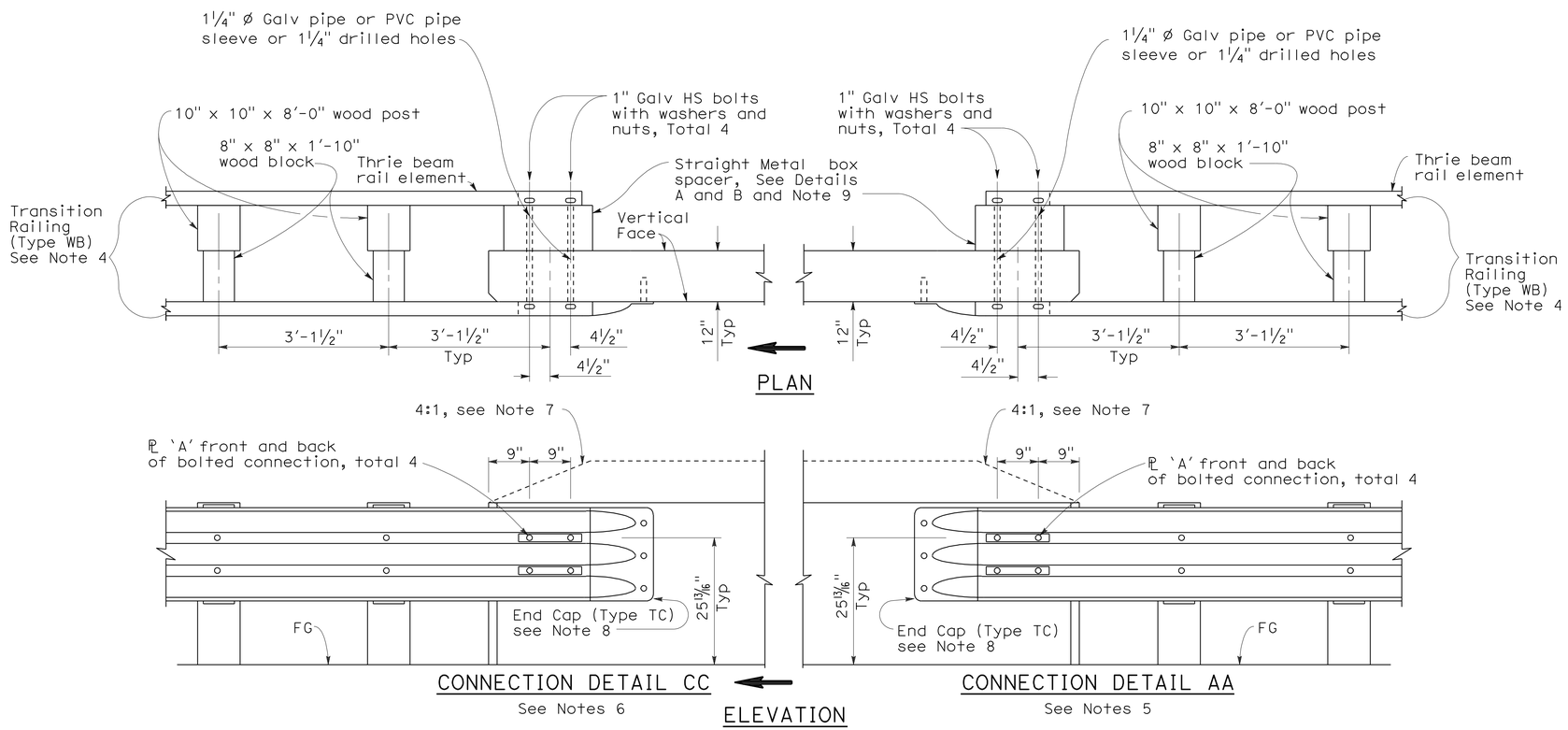

GUARD RAILING CONNECTION TO BRIDGE RAILING WITHOUT SIDEWALK

NOTES:

1. See Revised Standard Plan RSP A77J1 for additional connection details to bridges without sidewalks.
2. Additional details of posts, blocks and hardware are shown on Standard Plan A77B1, A77C1 and A77C2.
3. Direction of adjacent traffic indicated by ⟹.
4. For additional details of Transition Railing (Type WB), see Standard Plan A77J4. Transition Railing (Type WB) transitions the 12 gage w-beam standard railing section of guard railing to a heavier gage nested thrie beam railing section which is connected to the concrete bridge railing.
5. For typical use of Connection Detail AA, see Layout Types 12A and 12B on Revised Standard Plan RSP A77F1, Layout Types 12C and 12D on Standard Plan A77F2, and Layout Type 12E on Revised Standard Plan RSP A77F3.
6. For typical use of Connection Detail CC, see Layout Types 12AA and 12BB on Standard Plan A77F4 and Layout Type 12CC on Standard Plan A77F5.
7. Where the height of the bridge railing exceeds the height of the thrie beam railing by more than 1" at Connection Detail AA and connection Detail CC, taper the top of the end of the bridge railing at 4:1 to match the top elevation of the thrie beam railing.
8. For details of End Cap (Type TC), see Standard Plans A77J4.
9. See Standard Plans A77J4 for additional details regarding depth dimension for straight metal box spacer.

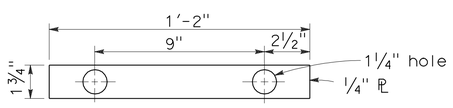

PLATE 'A'

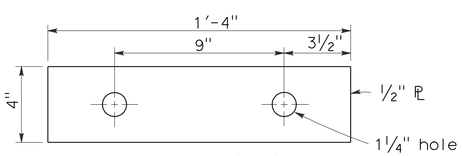

PLATE 'B'
(For backside of connection BB)

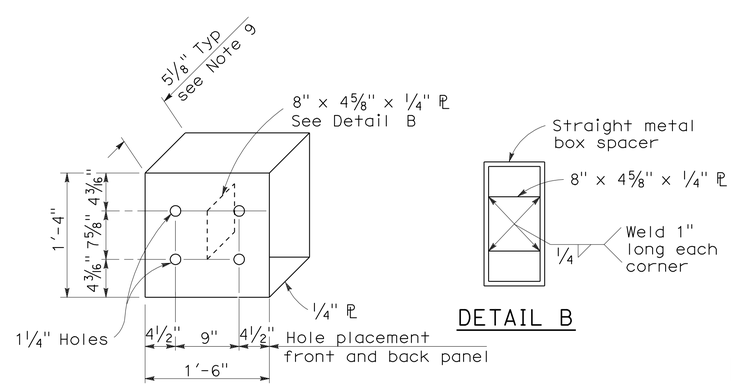

DETAIL A

DETAIL B

STRAIGHT METAL BOX SPACER

STATE OF CALIFORNIA
DEPARTMENT OF TRANSPORTATION

METAL BEAM GUARD RAILING CONNECTIONS TO BRIDGE RAILINGS WITHOUT SIDEWALKS DETAILS No.2

NO SCALE

RSP A77J2 DATED JUNE 6, 2008 SUPERSEDES STANDARD PLAN A77J2 DATED MAY 1, 2006 - PAGE 73 OF THE STANDARD PLANS BOOK DATED MAY 2006.

REVISED STANDARD PLAN RSP A77J2

2006 REVISED STANDARD PLAN RSP A77J2

12-10-07

DIST	COUNTY	ROUTE	POST MILES TOTAL PROJECT	SHEET NO.	TOTAL SHEETS
04	Ala,CC	4,80,84, 92,238,etc.	Var	116	141

Randell D. Hiatt
REGISTERED CIVIL ENGINEER

May 20, 2011
PLANS APPROVAL DATE

REGISTERED PROFESSIONAL ENGINEER
Randell D. Hiatt
No. C50200
Exp. 6-30-11
CIVIL
STATE OF CALIFORNIA

The State of California or its officers or agents shall not be responsible for the accuracy or completeness of electronic copies of this plan sheet.

To accompany plans dated 6-4-12

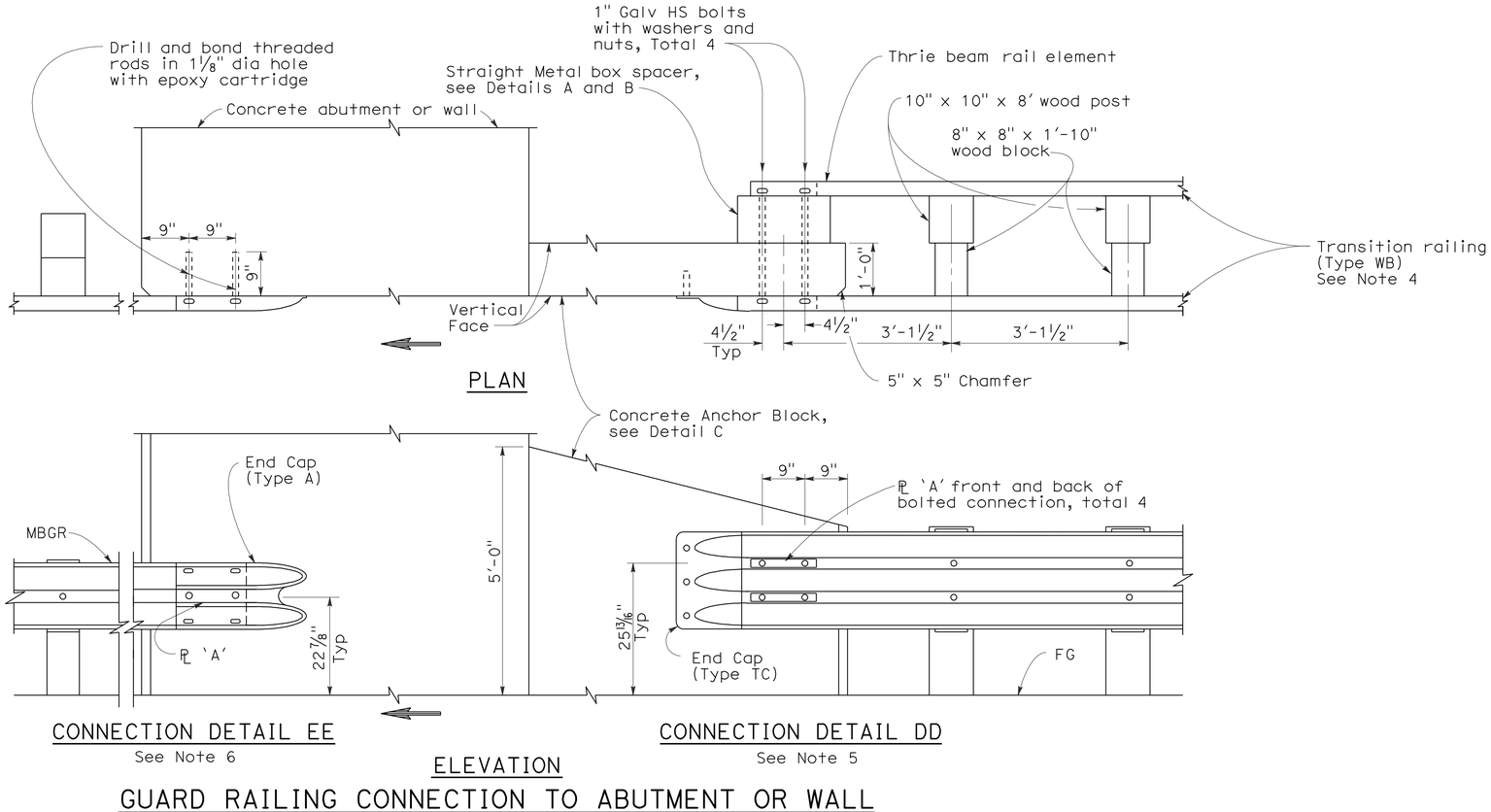

GUARD RAILING CONNECTION TO ABUTMENT OR WALL

NOTES:

1. These connection details apply to abutments and walls.
2. Additional details of posts, blocks and hardware are shown on Standard Plans A77B1, A77C1 and A77C2.
3. Direction of adjacent traffic indicated by ➡.
4. For additional details of Transition Railing (Type WB), see Standard Plan A77J4 Transition Railing (Type WB) transitions the 12 gage w-beam standard railing section of guard railing to a heavier gage nested thrie beam railing section which is connected to the concrete anchor block.
5. For typical use of Connection Details DD, See Layout Types 12A and 12B on Standard Plan A77F1 and Layout Types 12C and 12D on Standard Plan A77F2.
6. For typical use of Connection Detail EE, see Layout Type 12D on Standard Plan A77F2 and Layout Type 12DD on Standard Plan A77F5.

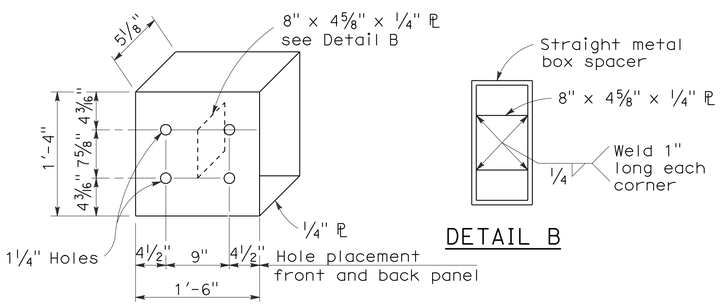

DETAIL A

STRAIGHT METAL BOX SPACER

DETAIL B

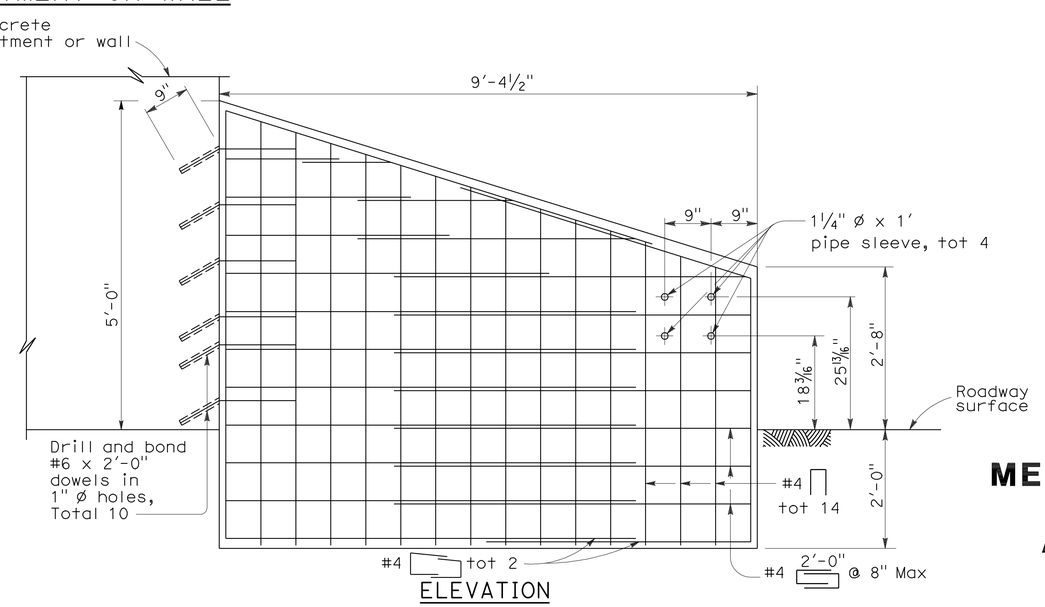

ELEVATION

ANCHOR BLOCK FOR TRANSITION RAILING CONNECTION

DETAIL C

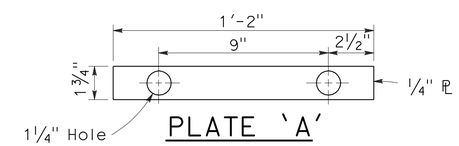

PLATE 'A'

STATE OF CALIFORNIA
DEPARTMENT OF TRANSPORTATION

METAL BEAM GUARD RAILING CONNECTIONS TO ABUTMENTS AND WALLS

NO SCALE

RSP A77J3 DATED MAY 20, 2011 SUPERSEDES STANDARD PLAN A77J3 DATED MAY 1, 2006 - PAGE 74 OF THE STANDARD PLANS BOOK DATED MAY 2006.

REVISED STANDARD PLAN RSP A77J3

2006 REVISED STANDARD PLAN RSP A77J3

3-10-11

DIST	COUNTY	ROUTE	POST MILES TOTAL PROJECT	SHEET NO.	TOTAL SHEETS
04	Ala,CC	4,80,84, 92,238,etc.	Var	117	141

Randell D. Hiatt
REGISTERED CIVIL ENGINEER

May 20, 2011
PLANS APPROVAL DATE

To accompany plans dated 6-4-12

REGISTERED PROFESSIONAL ENGINEER
Randell D. Hiatt
No. C50200
Exp. 6-30-11
CIVIL
STATE OF CALIFORNIA

The State of California or its officers or agents shall not be responsible for the accuracy or completeness of electronic copies of this plan sheet.

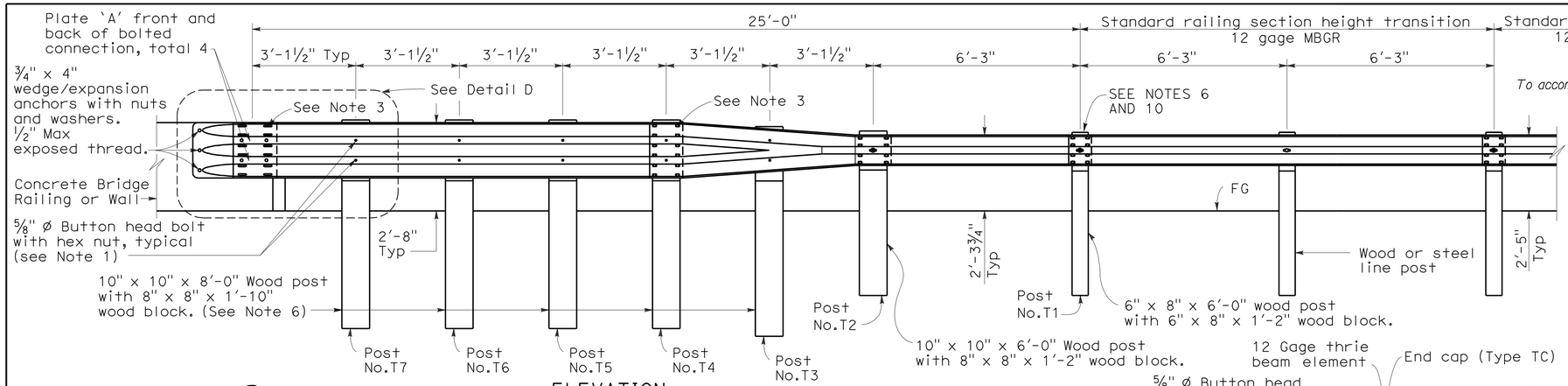

ELEVATION

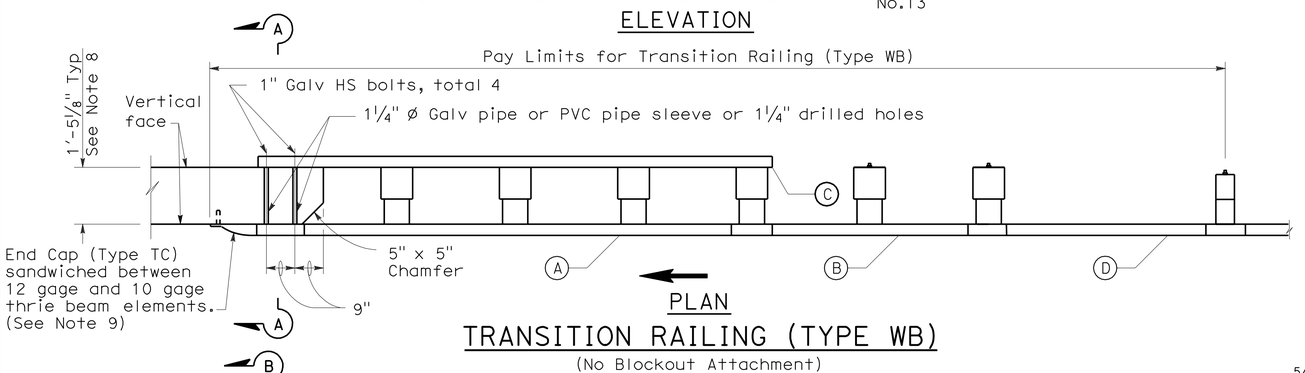

PLAN

TRANSITION RAILING (TYPE WB)

(No Blockout Attachment)

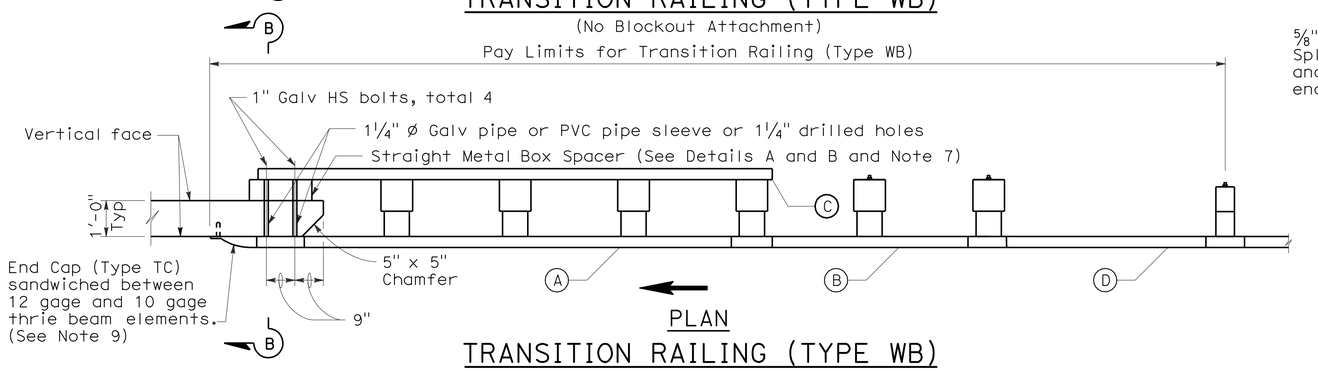

PLAN

TRANSITION RAILING (TYPE WB)

(Blockout Attachment)

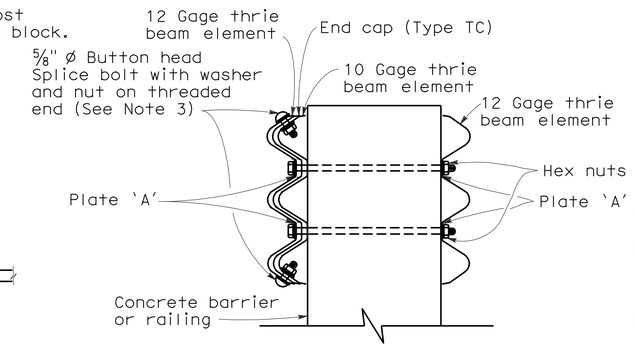

SECTION A-A

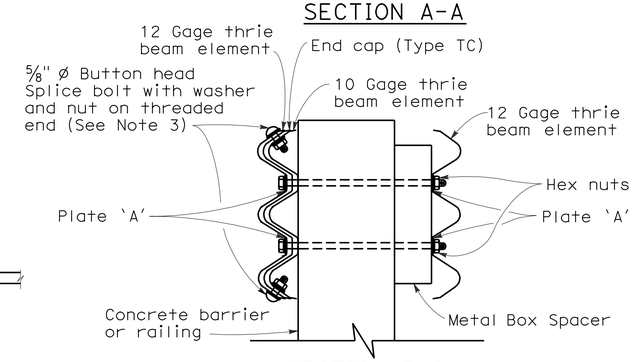

SECTION B-B

NOTES:

1. Use ⅝" ø Button head bolts and hex nuts for connections to posts. No washer on rail face for bolted connections to post.
2. The nested rail elements, end cap, and 'W' beam to thrie beam element may be spliced together prior to bolting the elements to the wood post and concrete barrier or railing.
3. Exterior splice bolt holes for rail element splices at Post No. T4 and the connection to the concrete barrier or railing shall be the standard 29/32" x 1⅛" slot size. Interior splice bolt holes at these locations may be increased up to 1¼" ø. Only the top 2 and the bottom 2 splice bolts with washers and nuts are required for rail splices at Post No. T4 and the connection to the concrete barrier or railing.
4. Direction of adjacent traffic indicated by ➡.
5. The top elevation of Posts No. T2 through No. T7 shall not project more than 1" above the top elevation of the rail element.
6. Typically, the railing connected to Transition Railing (Type WB) will be either standard railing section of metal beam guard railing with height transition ratio of 120:1 or an approved Caltrans end treatment attached to Post No. T1.
7. The depth of the metal box spacer varies from the 5⅛" to 1½" and is dependent on the width of the concrete railing or wall. The combined dimension for the depth of the metal box spacer plus the width of railing or wall is typically 17⅛". Where the space between the backside of the concrete railing or wall and the rear thrie beam element is less than 1½", metal plates similar to Plate 'A' are to be used as spacers.
8. Where the width of the concrete railing or wall is greater than 17⅛", wood blocks are to be used to fill the space created between the backside of Posts No. T4 through No. T7 and the rear thrie beam element. These wood blocks shall be 8" in width and 1'-2" in length. The dimension between the front thrie beam element and the rear thrie beam element is to match the width of the concrete railing or wall.
9. End cap may be installed over 12 gage and 10 gage thrie beam elements where transition railing is installed on the departure end of bridge railing.
10. Conform standard railing section height to 2'-3¾" at Post No. T1 using height transition ratio of 120:1.

LEGEND

(A) Nested thrie beam elements (one 12 gage element nested over one 10 gage element).

(B) One 10 gage "W" beam to thrie beam element.

(C) One 12 gage thrie beam element.

(D) One 10 gage "W" beam rail element (7'-3½" length)

10 gage = 0.135" thick

12 gage = 0.108" thick

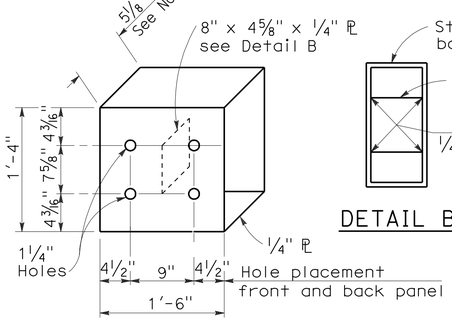

DETAIL A

STRAIGHT METAL BOX SPACER

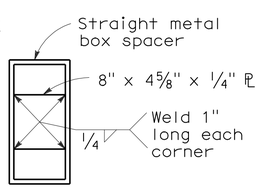

DETAIL B

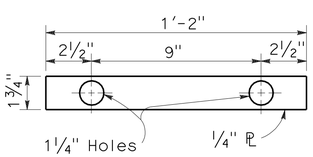

DETAIL C

PLATE 'A'

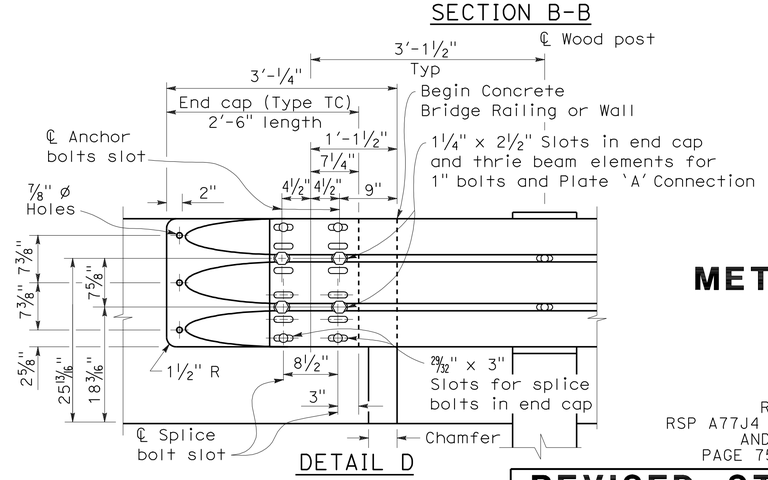

DETAIL D

STATE OF CALIFORNIA
DEPARTMENT OF TRANSPORTATION

METAL BEAM GUARD RAILING TRANSITION RAILING (TYPE WB)

NO SCALE

RSP A77J4 DATED MAY 20, 2011 SUPERSEDES
RSP A77J4 DATED JUNE 5, 2009, RSP A77J4 DATED JUNE 6, 2008
AND STANDARD PLAN A77J4 DATED MAY 1, 2006 -
PAGE 75 OF THE STANDARD PLANS BOOK DATED MAY 2006.

REVISED STANDARD PLAN RSP A77J4

2006 REVISED STANDARD PLAN RSP A77J4

DIST	COUNTY	ROUTE	POST MILES TOTAL PROJECT	SHEET NO.	TOTAL SHEETS
04	Ala,CC	4,80,84, 92,238,etc.	Var	118	141

Randell D. Hiatt
REGISTERED CIVIL ENGINEER

May 20, 2011
PLANS APPROVAL DATE

REGISTERED PROFESSIONAL ENGINEER
Randell D. Hiatt
No. C50200
Exp. 6-30-11
CIVIL
STATE OF CALIFORNIA

The State of California or its officers or agents shall not be responsible for the accuracy or completeness of electronic copies of this plan sheet.

To accompany plans dated 6-4-12

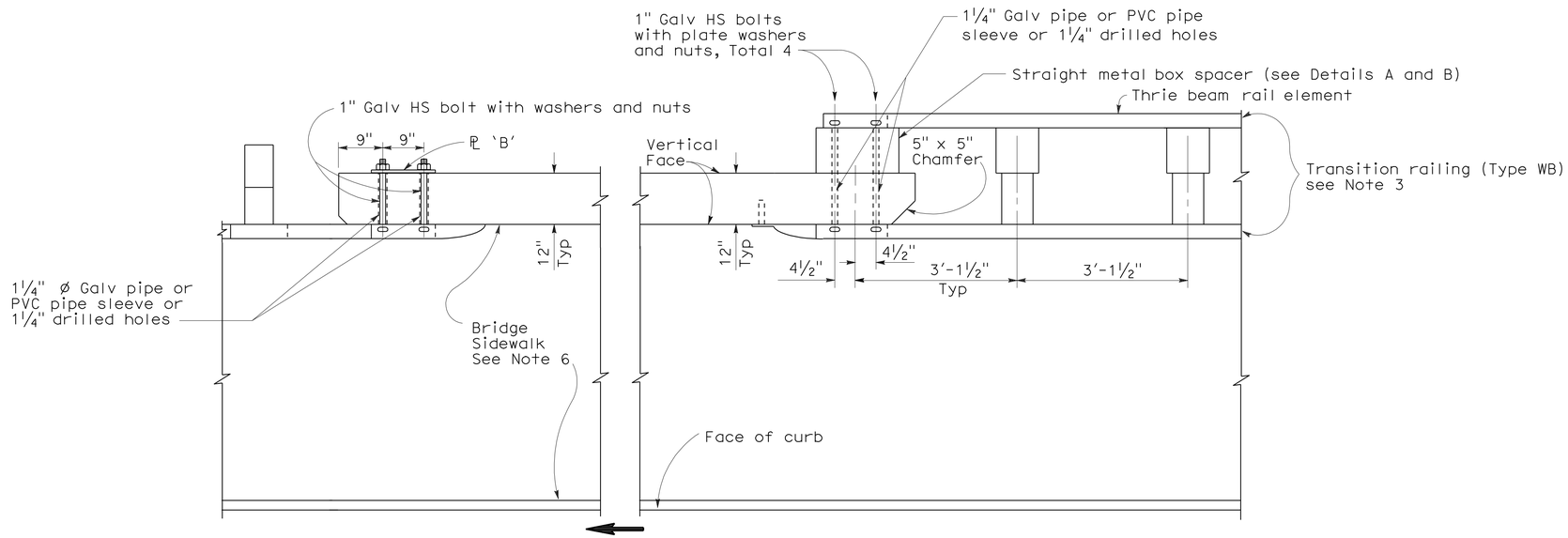

PLAN

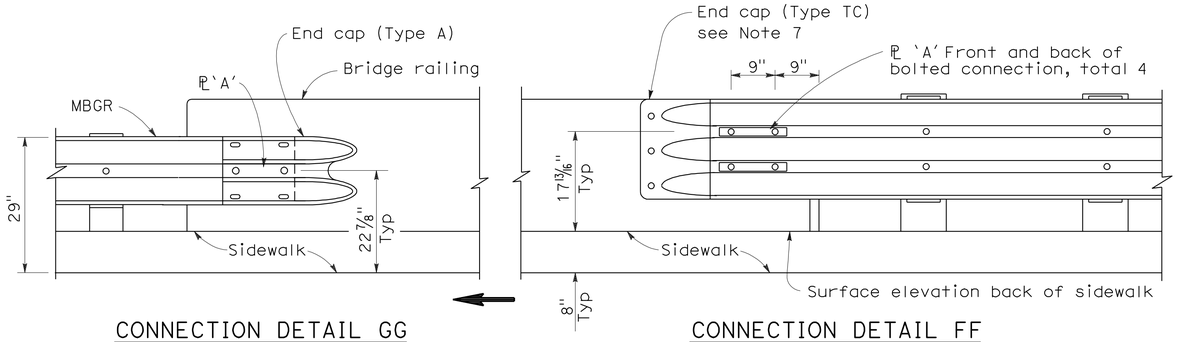

CONNECTION DETAIL GG
See Notes 5

ELEVATION

CONNECTION DETAIL FF
See Notes 4

GUARD RAILING CONNECTION TO BRIDGE RAILING WITH SIDEWALKS

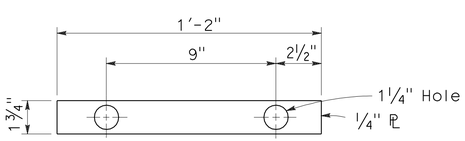

PLATE 'A'

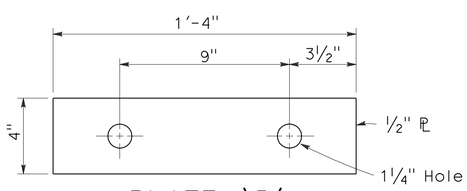

PLATE 'B'
(For backside of connection SB)

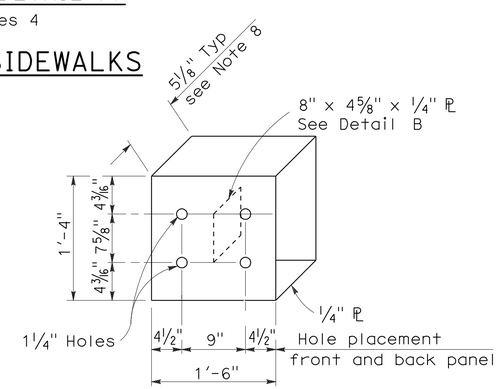

DETAIL A

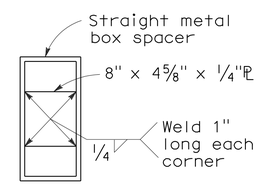

DETAIL B

STRAIGHT METAL BOX SPACER

NOTES:

1. See Standard Plan A77K2 for additional connection details to bridges with sidewalks.
2. Direction of adjacent traffic indicated by ⟶.
3. For additional details of Transition Railing (Type WB), see Standard Plan A77J4. Transition Railing (Type WB) transitions the 12 gage w-beam standard railing section of guard railing to a heavier gage nested thrie beam railing which is connected to the concrete bridge railing.
4. For typical use of Connection Detail FF, see Layout Types 12A and 12B on Standard Plan A77F1.
5. For typical use of Connection Detail GG, see Layout Type 12D on Standard Plan A77F2 and Layout Type 12DD on Standard Plan A77F5.
6. Where the bridge sidewalk is not continued beyond the end of the bridge railing, the portion of the sidewalk beyond each end of the bridge railing shall be transitioned down from the top elevation of the sidewalk, for its entire width, to the finished grade of the adjacent roadbed. The longitudinal slope of each sidewalk elevation transition shall not exceed 8.33 percent.
7. For details of End Cap (Type TC), see Standard Plan A77J4.
8. See Standard Plan A77J4 for additional details regarding depth dimension for straight metal box spacer.

STATE OF CALIFORNIA
DEPARTMENT OF TRANSPORTATION

METAL BEAM GUARD RAILING CONNECTIONS TO BRIDGE RAILINGS WITH SIDEWALKS DETAILS No.1

NO SCALE

RSP A77K1 DATED MAY 20, 2011 SUPERSEDES STANDARD PLAN A77K1
DATED MAY 1, 2006 - PAGE 76 OF THE STANDARD PLANS BOOK DATED MAY 2006.

REVISED STANDARD PLAN RSP A77K1

2006 REVISED STANDARD PLAN RSP A77K1

3-10-11

DIST	COUNTY	ROUTE	POST MILES TOTAL PROJECT	SHEET NO.	TOTAL SHEETS
04	Ala,CC	4,80,84, 92,238,etc.	Var	119	141

Randell D. Hiatt
REGISTERED CIVIL ENGINEER

June 6, 2008
PLANS APPROVAL DATE

REGISTERED PROFESSIONAL ENGINEER
Randell D. Hiatt
No. C50200
Exp. 6-30-09
CIVIL
STATE OF CALIFORNIA

The State of California or its officers or agents shall not be responsible for the accuracy or completeness of electronic copies of this plan sheet.

To accompany plans dated 6-4-12

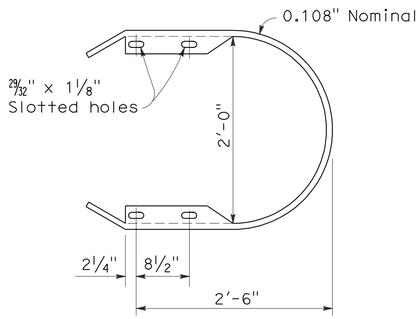

RETURN CAP
(TYPE TA)

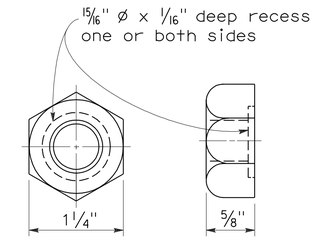

5/8" ø RECESS NUT

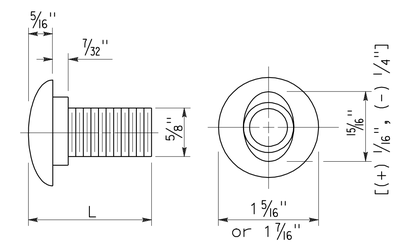

5/8" ø BUTTON HEAD BOLT

L	THREAD LENGTH
1 1/4"	full thread length
2"	full thread length
9 1/2"	4" Min thread length
18"	4" Min thread length

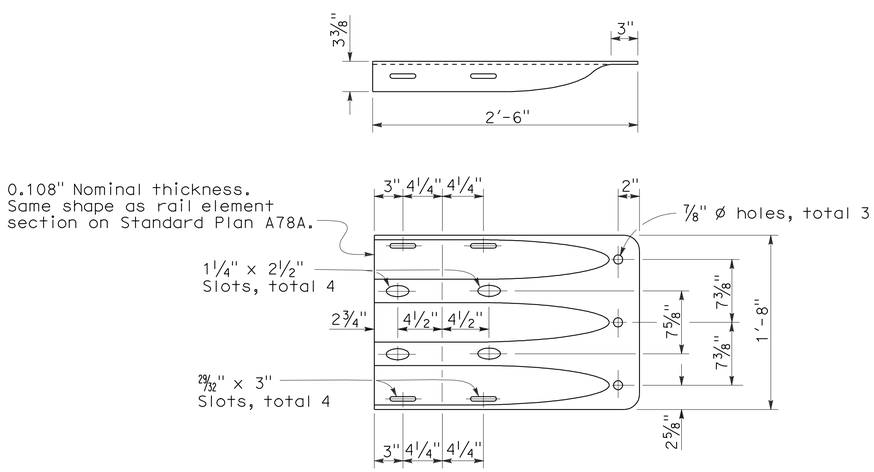

END CAP
(TYPE TC)

STATE OF CALIFORNIA
DEPARTMENT OF TRANSPORTATION

THRIE BEAM BARRIER STANDARD HARDWARE DETAILS

NO SCALE

RSP A78C1 DATED JUNE 6, 2008 SUPERSEDES STANDARD PLAN A78C1
DATED MAY 1, 2006 - PAGE 85 OF THE STANDARD PLANS BOOK DATED MAY 2006.

REVISED STANDARD PLAN RSP A78C1

2006 REVISED STANDARD PLAN RSP A78C1

4-21-08

DIST	COUNTY	ROUTE	POST MILES TOTAL PROJECT	SHEET NO.	TOTAL SHEETS
04	Ala,CC	4,80,84, 92,238,*etc.*	Var	120	141

REGISTERED CIVIL ENGINEER

November 17, 2006
PLANS APPROVAL DATE

REGISTERED PROFESSIONAL ENGINEER Michael Janzen No. 44788 Exp. 03-31-08 CIVIL STATE OF CALIFORNIA

The State of California or its officers or agents shall not be responsible for the accuracy or completeness of electronic copies of this plan sheet.

To accompany plans dated 6-4-12

2006 REVISED STANDARD PLAN RSP A87A

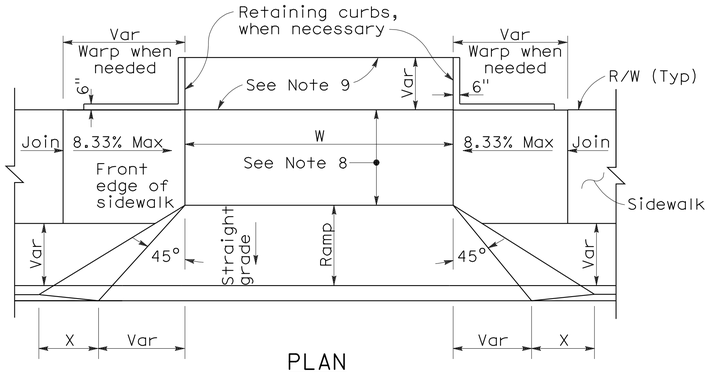

PLAN

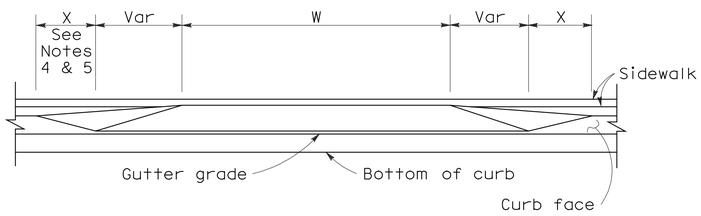

ELEVATION

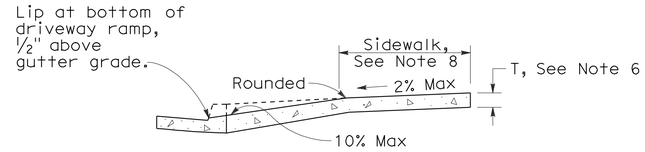

CASE A

Typical driveway, sidewalk not depressed

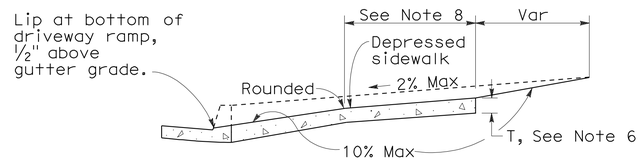

CASE B

Driveway with depressed sidewalk

SECTIONS

DRIVEWAYS

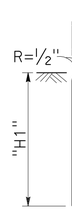

TYPE A1 CURBS

See Table A

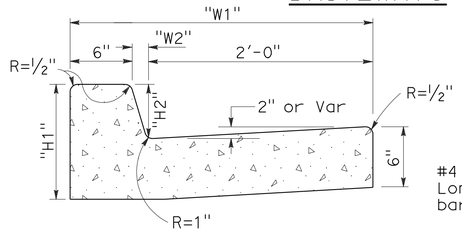

TYPE A2 CURBS

See Table A

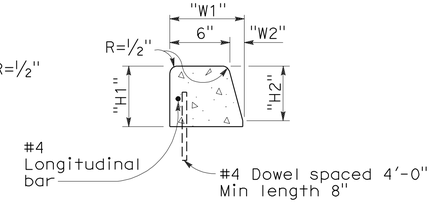

TYPE A3 CURBS

Superimposed on existing pavement
See Table A

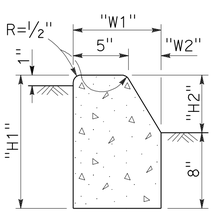

TYPE B1 CURBS

See Table A

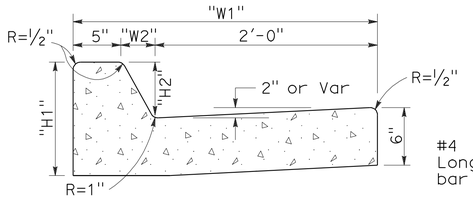

TYPE B2 CURBS

See Table A

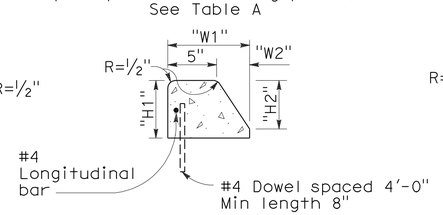

TYPE B3 CURBS

Superimposed on existing pavement
See Table A

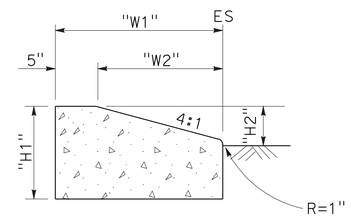

TYPE D CURBS

See Table A

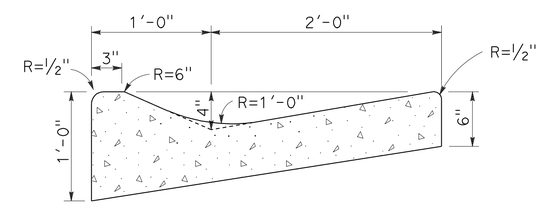

TYPE E CURB

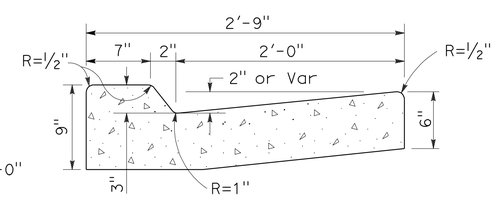

TYPE B4 CURBS

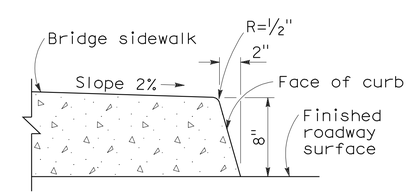

TYPE H CURB

On Bridges

CURBS

CURB QUANTITIES

TYPE	CUBIC YARDS PER LINEAR FOOT
A1-6	0.02585
A1-8	0.03084
A2-6	0.05903
A2-8	0.06379
A3-6	0.01036
A3-8	0.01435
B1-4	0.02185
B1-6	0.02930
B2-4	0.05515
B2-6	0.06171
B3-4	0.00641
B3-6	0.01074
B4	0.05709
D-4	0.04083
D-6	0.06804
E	0.06661

TABLE A

CURB TYPE	DIMENSIONS "H1"	"H2"	"W1"	"W2"
A1-6	1'-2"	6"	7½"	1½"
A1-8	1'-4"	8"	8"	2"
A2-6	1'-0"	6"	2'-7½"	1½"
A2-8	1'-2"	8"	2'-8"	2"
A3-6	6"	5"	7¼"	1¼"
A3-8	8"	7"	7¾"	1¾"
B1-4	1'-0"	4"	7½"	2½"
B1-6	1'-2"	6"	9"	4"
B2-4	10"	4"	2'-7½"	2½"
B2-6	1'-0"	6"	2'-9"	4"
B3-4	4"	3"	7"	2"
B3-6	6"	5"	8½"	3½"
D-4	10"	4"	1'-6"	1'-1"
D-6	1'-0"	6"	2'-2"	1'-8"

NOTES:

1. Case A driveway section typically applies.
2. Use Case B driveway section when ramp slopes would exceed 10% in Case A.
3. Use Case B driveway section when sidewalk cross slope would exceed 2% in Case A.
4. X=3'-0" except for curb heights over 10" where 4:1 slopes shall be used on curb slope.
5. X is a variable when sidewalk is located where wheelchairs may traverse the surface. Slopes shall not exceed 8.33%.
6. Sidewalk and ramp thickness "T" at driveway shall be 4" for residental and 6" for commercial.
7. Difference in slope of the driveway ramp and the slope of a line between the gutter and a point on the roadway 5'-0" from gutter line shall not exceed 15%. Reduce driveway ramp slope, not gutter slope, where required.
8. Minimum width of clear passageway for sidewalk shall be 4'-0".
9. Retaining curbs and acquisition of construction easement may be necessary for narrow sidewalks or curb heights in excess of 6".
10. Across the pedestrian route at curb ramp locations, the gutter pan slope shall not exceed 1" of depth for each 2'-0" of width.

STATE OF CALIFORNIA
DEPARTMENT OF TRANSPORTATION

CURBS AND DRIVEWAYS

NO SCALE

RSP A87A DATED NOVEMBER 17, 2006 SUPERSEDES STANDARD PLAN A87A DATED MAY 1, 2006 - PAGE 113 OF THE STANDARD PLANS BOOK DATED MAY 2006.

REVISED STANDARD PLAN RSP A87A

10-25-06

DIST	COUNTY	ROUTE	POST MILES TOTAL PROJECT	SHEET NO.	TOTAL SHEETS
04	Ala,CC	4,80,84, 92,238,etc.	Var	121	141

Raymond Don Tsztoo
REGISTERED CIVIL ENGINEER

March 7, 2008
PLANS APPROVAL DATE

REGISTERED PROFESSIONAL ENGINEER
Raymond Don Tsztoo
No. C37332
Exp. 6-30-08
CIVIL
STATE OF CALIFORNIA

The State of California or its officers or agents shall not be responsible for the accuracy or completeness of electronic copies of this plan sheet.

To accompany plans dated 6-4-12

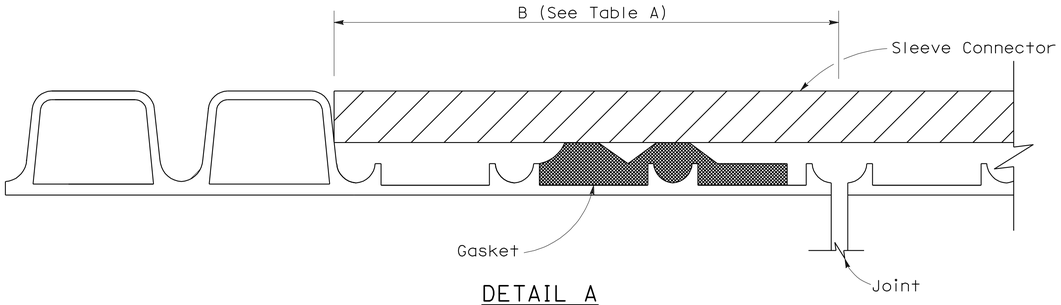

DETAIL A

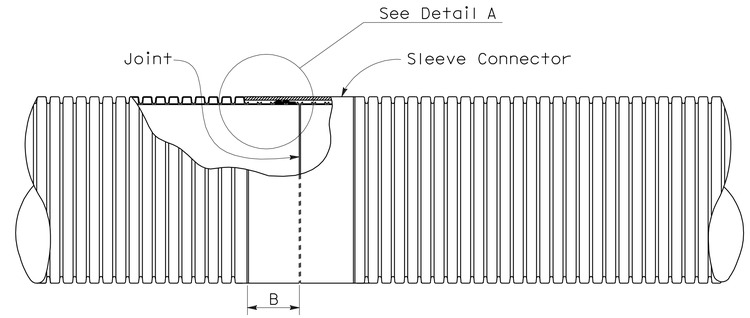

PLAN VIEW
Liner Insert
See Note 4

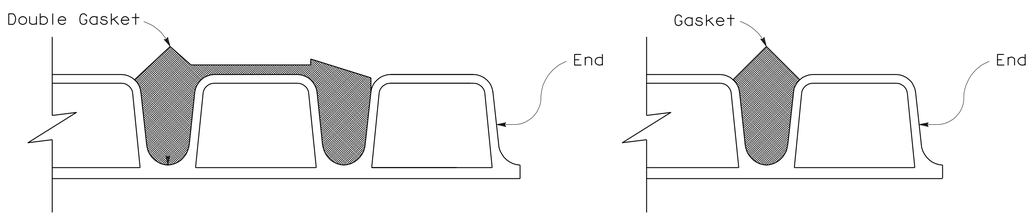

Double Gasket

Single Gasket

DETAIL B

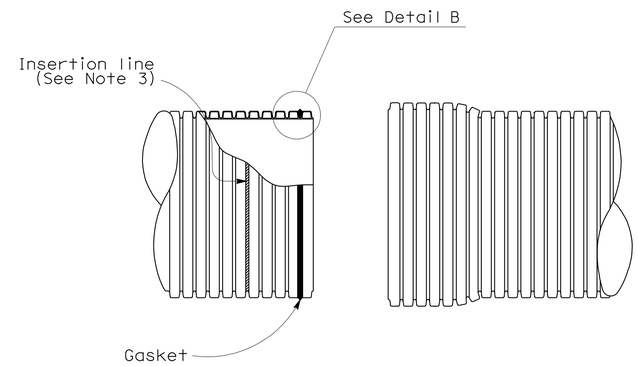

SPIGOT

BELL

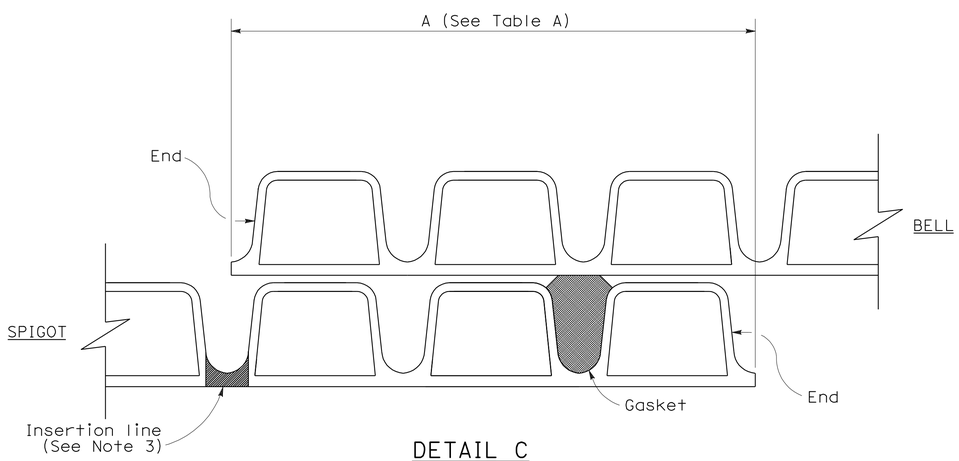

DETAIL C
(Single gasket shown)

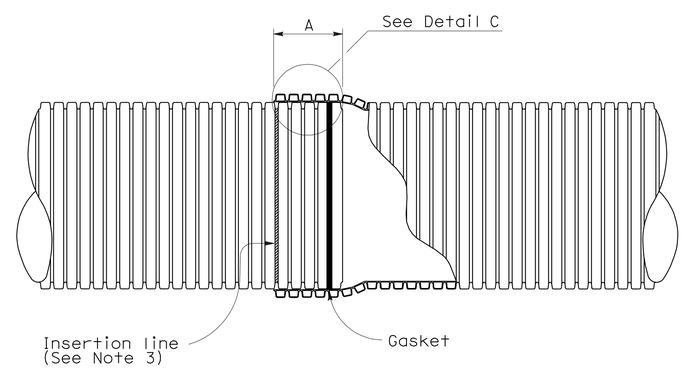

BELL AND SPIGOT JOINT

NOTES:

1. For pipe sections installed on straight alignment, the pipe sections shall be joined to achieve maxium joint overlap at all points on the periphery as indicated in Table A where the plans call for positive or watertight joints. Maxium joint overlap is recommended where the plans call for standard joints, but in no case shall the joint overlap be less than 3½".

2. For pipe sections installed on curved alignment, the maxium angle of deflection from straight alignment at any joint shall not exceed two degrees. Where the plans call for watertightness, field testing for compliance is required. Where plans call for positive joints, the pipe sections shall be joined to achieve Table A Dimensions on one side of the joint. Joints classified as standard shall have no less than 3½" joint overlap at any point on the periphery.

3. Factory applied insertion line limit shall be placed on spigot.

4. Liner insert to be used inside of existing pipe.

TABLE A

JOINT OVERLAP DIMENSIONS		
PIPE Dia (NOMINAL)	A	B
12"	5¾"	4¼"
15"	6¾"	5⅝"
18"	6¾"	5⅝"
21"	8½"	5⅝"
24"	8½"	6⅛"
30"	8½"	7⅛"
36"	8½"	8⅛"

STATE OF CALIFORNIA
DEPARTMENT OF TRANSPORTATION

CORRUGATED POLYVINYL CHLORIDE PIPE WITH SMOOTH INTERIOR STANDARD AND POSITIVE JOINTS

NO SCALE

NSP D97I DATED MARCH 7, 2008 SUPPLEMENTS THE STANDARD PLANS BOOK DATED MAY 2006.

NEW STANDARD PLAN NSP D97I

2006 NEW STANDARD PLAN NSP D97I

2-13-08

DIST	COUNTY	ROUTE	POST MILES TOTAL PROJECT	SHEET NO.	TOTAL SHEETS
04	Ala,CC	4,80,84, 92,238,etc.	Var	122	141

LICENSED LANDSCAPE ARCHITECT

April 3, 2009
PLANS APPROVAL DATE

The State of California or its officers or agents shall not be responsible for the accuracy or completeness of electronic copies of this plan sheet.

LICENSED LANDSCAPE ARCHITECT
Gregory A. Balzer 3598
Signature
02-28-11
Renewal Date
03-04-09
Date
STATE OF CALIFORNIA

To accompany plans dated 6-4-12

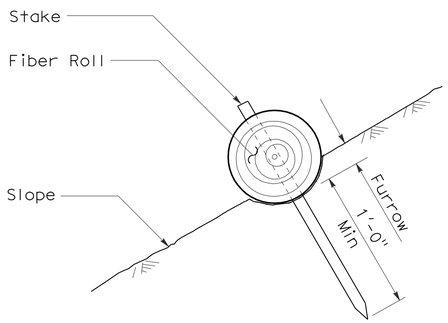

SECTION

FIBER ROLL (TYPE 1)

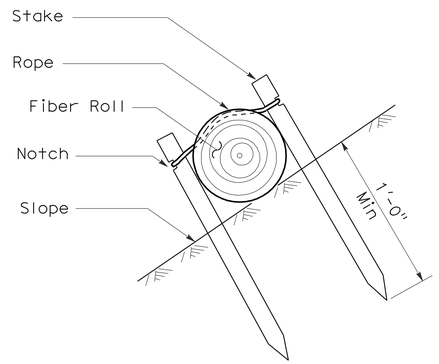

SECTION

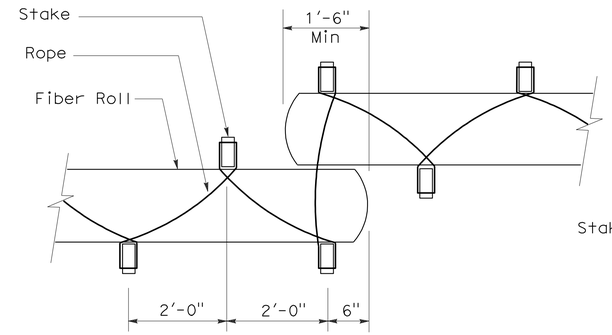

PLAN

FIBER ROLL (TYPE 2)

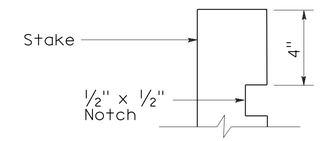

ELEVATION

STAKE NOTCH DETAIL

NOTES:

1. Fiber roll spacing varies depending upon slope inclination.
2. Installations shown in the perspectives are for slope inclination of 10:1 and steeper.

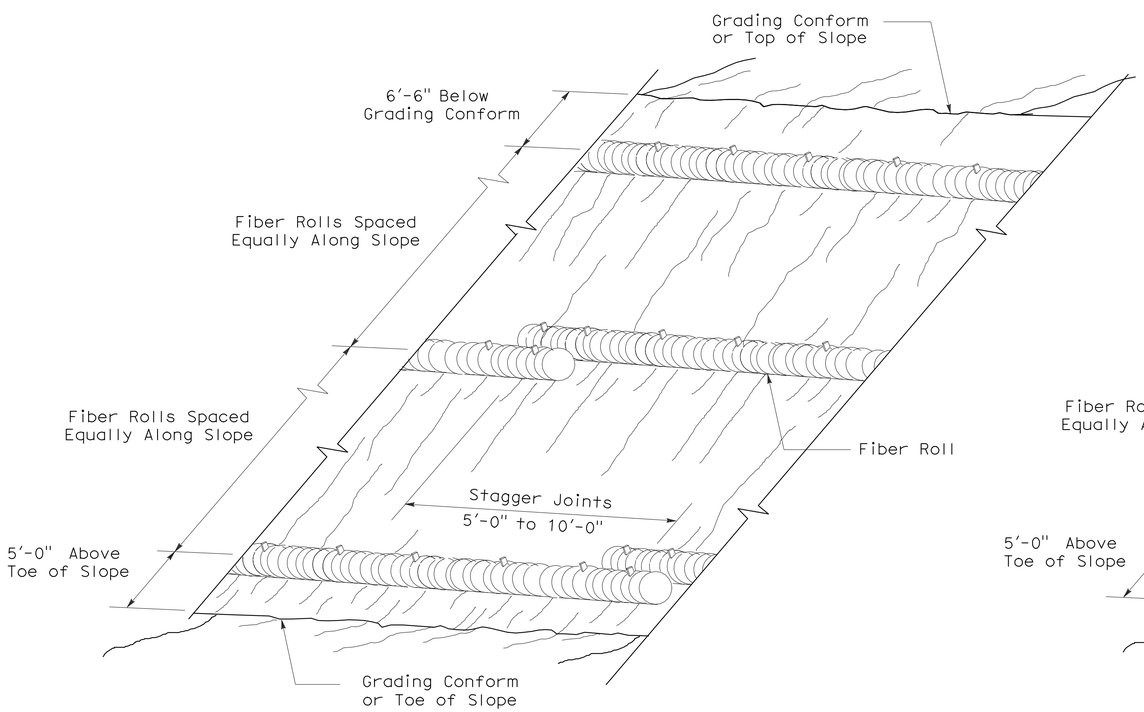

PERSPECTIVE

FIBER ROLL (TYPE 1)

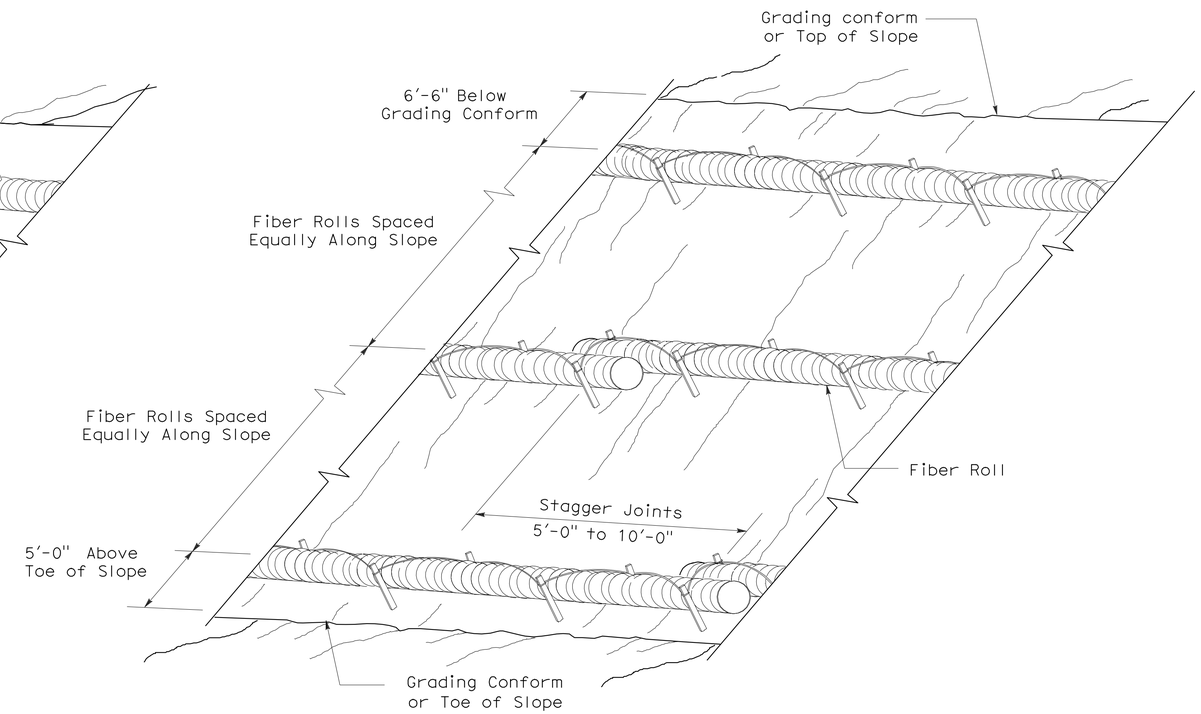

PERSPECTIVE

FIBER ROLL (TYPE 2)

STATE OF CALIFORNIA
DEPARTMENT OF TRANSPORTATION

EROSION CONTROL DETAILS (FIBER ROLL)

NO SCALE

RNSP H51 DATED APRIL 3, 2009 SUPERSEDES NSP H51 DATED DECEMBER 1, 2006 THAT SUPPLEMENTS THE STANDARD PLANS BOOK DATED MAY 2006.

REVISED NEW STANDARD PLAN RNSP H51

2006 REVISED NEW STANDARD PLAN RNSP H51

DIST	COUNTY	ROUTE	POST MILES TOTAL PROJECT	SHEET NO.	TOTAL SHEETS
04	Ala,CC	4,80,84, 92,238,etc.	Var	123	141

Randell D. Hiatt
REGISTERED CIVIL ENGINEER

June 6, 2008
PLANS APPROVAL DATE

REGISTERED PROFESSIONAL ENGINEER
Randell D. Hiatt
No. C50200
Exp. 6-30-09
CIVIL
STATE OF CALIFORNIA

The State of California or its officers or agents shall not be responsible for the accuracy or completeness of electronic copies of this plan sheet.

To accompany plans dated 6-4-12

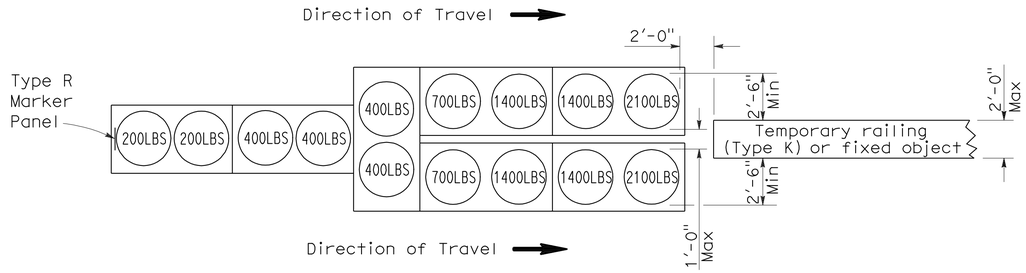

ARRAY `TU14'

Approach speed 45 mph or more

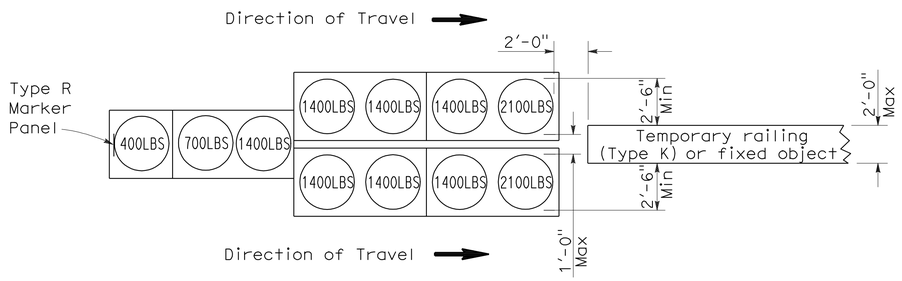

ARRAY `TU11'

Approach speed less than 45 mph

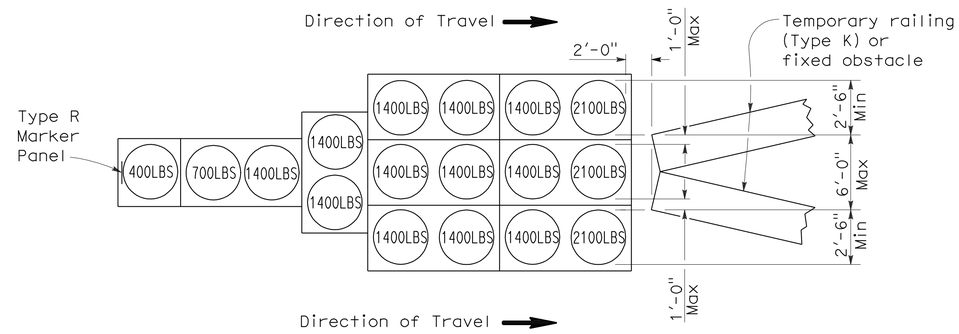

ARRAY `TU17'

Approach speed less than 45 mph

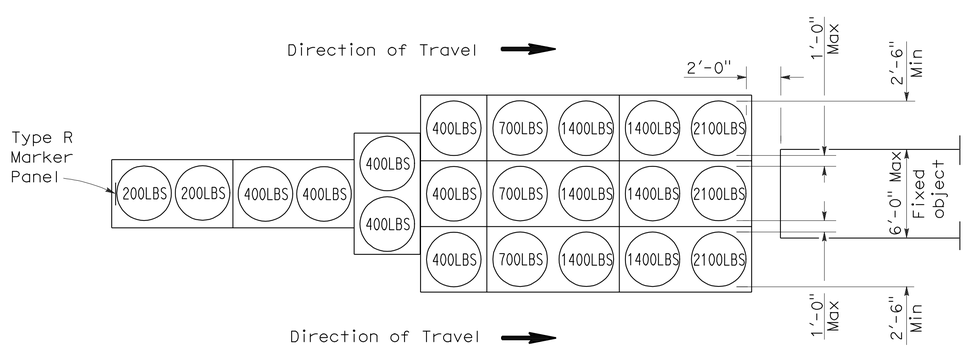

ARRAY `TU21'

Approach speed 45 mph or more

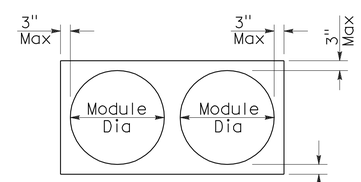

PLAN

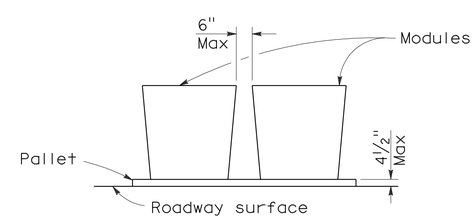

ELEVATION

CRASH CUSHION PALLET DETAIL

See Note 7

NOTES:

1. (XXX) Indicates sand filled module location and weight of sand in pounds for each module. Module spacing is based on the greater diameter of the module.
2. All sand weights are nominal.
3. Temporary crash cushion arrays shall not encroach on the traveled way.
4. Place the top of Type R marker panel 1" below the module lid.
5. Refer to Standard Plan A73B for marker details.
6. Approach speeds indicated conform to NCHRP 350 Report criteria.
7. Use of pallets is optional.

STATE OF CALIFORNIA
DEPARTMENT OF TRANSPORTATION

TEMPORARY CRASH CUSHION, SAND FILLED (UNIDIRECTIONAL)

NO SCALE

RSP T1A DATED JUNE 6, 2008 SUPERSEDES STANDARD PLAN T1A
DATED MAY 1, 2006 - PAGE 211 OF THE STANDARD PLANS BOOK DATED MAY 2006.

REVISED STANDARD PLAN RSP T1A

2006 REVISED STANDARD PLAN RSP T1A

DIST	COUNTY	ROUTE	POST MILES TOTAL PROJECT	SHEET NO.	TOTAL SHEETS
04	Ala,CC	4,80,84, 92,238,etc.	Var	124	141

Randell D. Hiatt
REGISTERED CIVIL ENGINEER

June 6, 2008
PLANS APPROVAL DATE

REGISTERED PROFESSIONAL ENGINEER
Randell D. Hiatt
No. C50200
Exp. 6-30-09
CIVIL
STATE OF CALIFORNIA

The State of California or its officers or agents shall not be responsible for the accuracy or completeness of electronic copies of this plan sheet.

To accompany plans dated 6-4-12

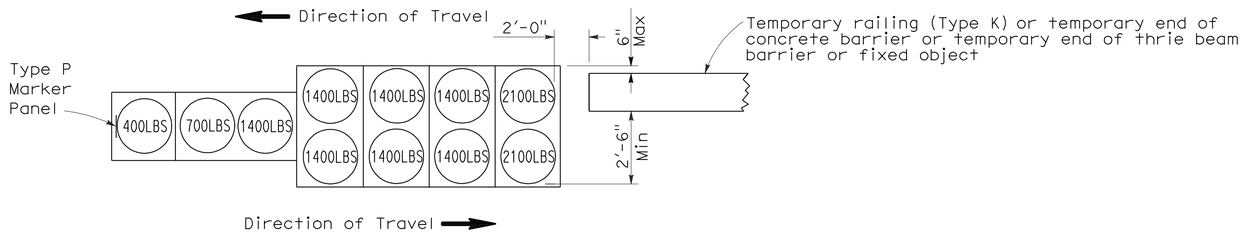

ARRAY 'TB11'

Approach speed less than 45 mph

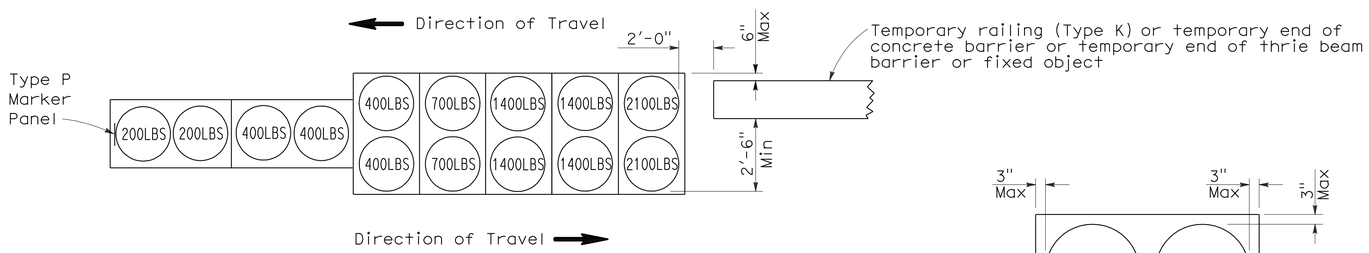

ARRAY 'TB14'

Approach speed 45 mph or more

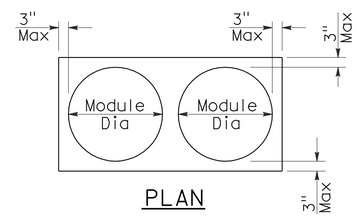

PLAN

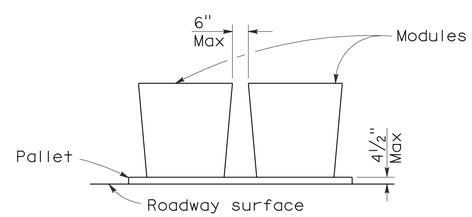

ELEVATION

CRASH CUSHION PALLET DETAIL

See Note 7

NOTES:

1. (XXX) Indicates sand filled module location and weight of sand in pounds for each module. Module spacing is based on the greater diameter of the module.
2. All sand weights are nominal.
3. Temporary crash cushion arrays shall not encroach on the traveled way.
4. Place the Type P marker panel so that the bottom of the panel rests upon the pallet.
5. Refer to Standard Plan A73B for marker details.
6. Approach speeds indicated conform to NCHRP 350 Report criteria.
7. Use of pallets is optional.

STATE OF CALIFORNIA
DEPARTMENT OF TRANSPORTATION

TEMPORARY CRASH CUSHION, SAND FILLED (BIDIRECTIONAL)

NO SCALE

RSP T1B DATED JUNE 6, 2008 SUPERSEDES STANDARD PLAN T1B
DATED MAY 1, 2006 - PAGE 212 OF THE STANDARD PLANS BOOK DATED MAY 2006.

REVISED STANDARD PLAN RSP T1B

2006 REVISED STANDARD PLAN RSP T1B

5-15-08

DIST	COUNTY	ROUTE	POST MILES TOTAL PROJECT	SHEET NO.	TOTAL SHEETS
04	Ala,CC	4,80,84, 92,238,etc.	Var	125	141

Randell D. Hiatt
REGISTERED CIVIL ENGINEER

June 6, 2008
PLANS APPROVAL DATE

REGISTERED PROFESSIONAL ENGINEER
Randell D. Hiatt
No. C50200
Exp. 6-30-09
CIVIL
STATE OF CALIFORNIA

The State of California or its officers or agents shall not be responsible for the accuracy or completeness of electronic copies of this plan sheet.

To accompany plans dated 6-4-12

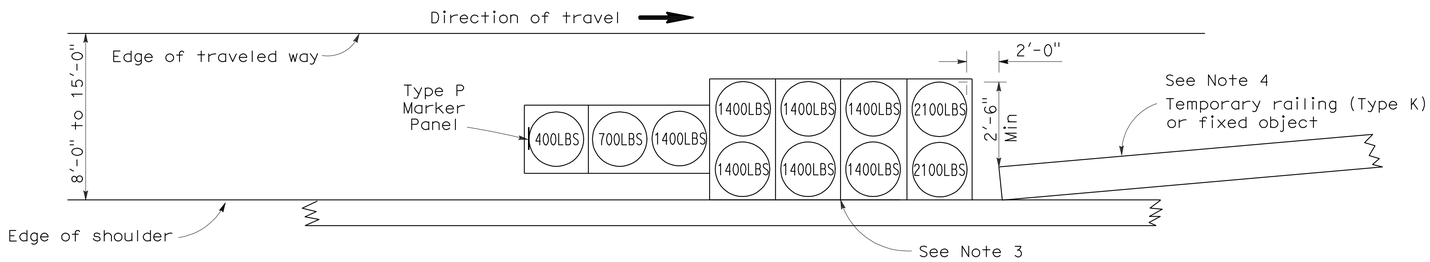

ARRAY 'TS11'

Approach speed less than 45 mph
See Note 9

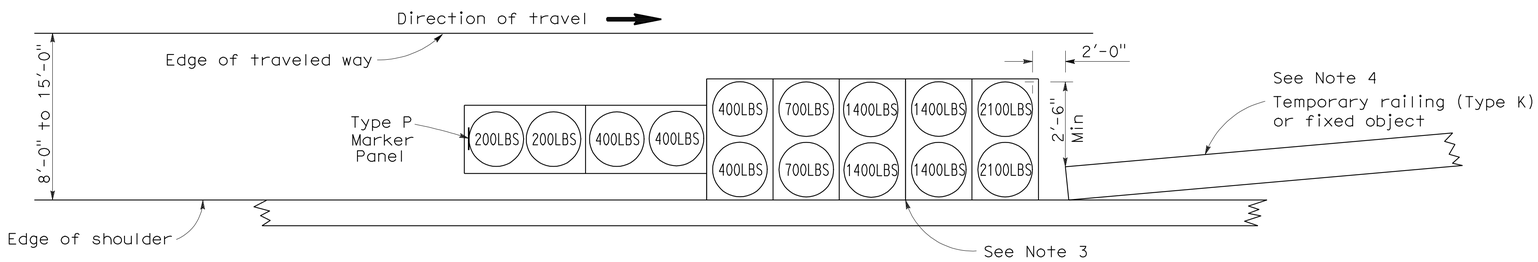

ARRAY 'TS14'

Approach speed 45 mph or more
See Note 9

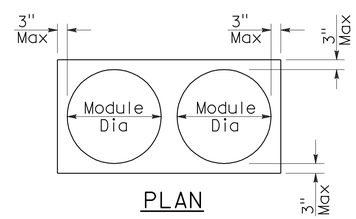

PLAN

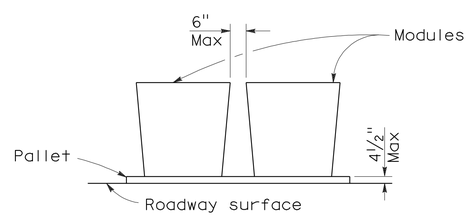

ELEVATION

CRASH CUSHION PALLET DETAIL

See Note 11

NOTES:

1. (XXX) Indicates sand filled module location and weight of sand in pounds for each module. Module spacing is based on the greater diameter of the module.
2. All sand weights are nominal.
3. The temporary crash cushion arrays shown on this plan shall be used only in locations where there will be traffic on one side of the temporary crash cushion array.
4. If the fixed object or approach end of the temporary railing is less than 15'-0" from the edge of traveled way, a temporary crash cushion is required in a construction or work zone.
5. Temporary crash cushion arrays shall not encroach on the traveled way.
6. Arrays for median shoulders shall conform to details shown on this plan for outside shoulders.
7. Place the Type P marker panel so that the bottom of the panel rests upon the pallet and faces traffic.
8. Refer to Standard Plan A73B for marker details.
9. For shoulder widths less than 8'-0", appropriate approved crash cushion protection, other than sand filled modules, shall be provided at fixed objects and at approach ends of temporary railing. The specific type of crash cushion shall be as shown on the project plans or as specified in the Special Provisions, or if not shown on the project plans or specified in the Special Provisions, shall be as approved by the Engineer.
10. Approach speeds indicated conform to NCHRP 350 Report criteria.
11. Use of pallets is optional.

STATE OF CALIFORNIA
DEPARTMENT OF TRANSPORTATION

TEMPORARY CRASH CUSHION, SAND FILLED (SHOULDER INSTALLATIONS)

NO SCALE

RSP T2 DATED JUNE 6, 2008 SUPERSEDES STANDARD PLAN T2
DATED MAY 1, 2006 - PAGE 213 OF THE STANDARD PLANS BOOK DATED MAY 2006.

REVISED STANDARD PLAN RSP T2

2006 REVISED STANDARD PLAN RSP T2

5-15-08

DIST	COUNTY	ROUTE	POST MILES TOTAL PROJECT	SHEET NO.	TOTAL SHEETS
04	Ala,CC	4,80,84, 92,238,etc.	Var	126	141

Randell D. Hiatt
REGISTERED CIVIL ENGINEER

May 20, 2011
PLANS APPROVAL DATE

REGISTERED PROFESSIONAL ENGINEER
Randell D. Hiatt
No. C50200
Exp. 6-30-11
CIVIL
STATE OF CALIFORNIA

The State of California or its officers or agents shall not be responsible for the accuracy or completeness of electronic copies of this plan sheet.

To accompany plans dated 6-4-12

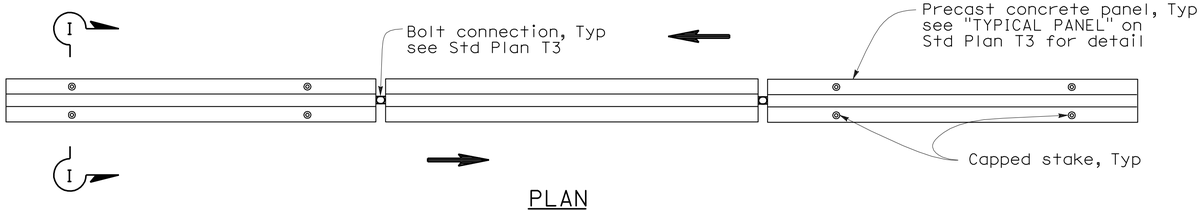

PLAN

RAILING STAKING CONFIGURATION FOR TWO-WAY TRAFFIC

See Note 1

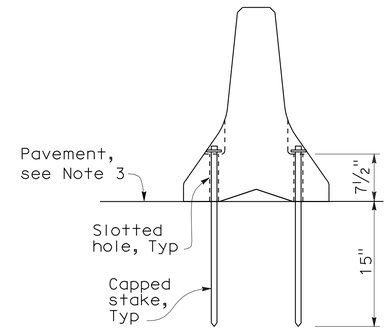

SECTION I-I

NOTES:

1. Where Type K Temporary Railing is placed as a temporary or long term barrier in two-way traffic on highways with less than 24" from the edge of traveled way, use four capped stakes per every other panel with end panels staked.
2. Where Type K Temporary Railing is placed 3" to 24" from the edge of an excavation on highways, use two capped stakes per panel along the traffic side.
3. Staked Type K Temporary Railing must be supported by at least 4" thick concrete, hot mix asphalt or existing asphalt concrete pavement.
4. The minimum yield strength for the washer must be 60,000 psi.
5. Direction of adjacent traffic indicated by ⟹.

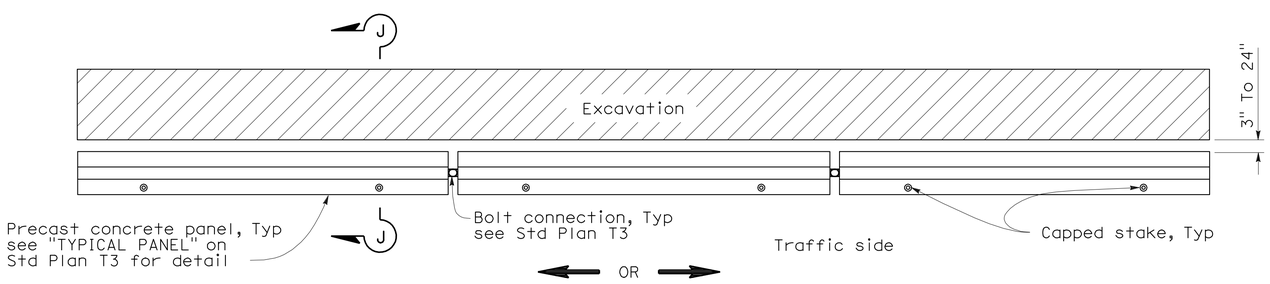

PLAN

RAILING STAKING CONFIGURATION ADJACENT TO AN EXCAVATION

See Note 2

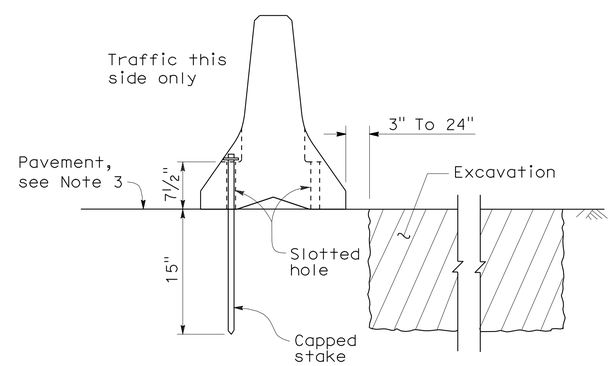

SECTION J-J

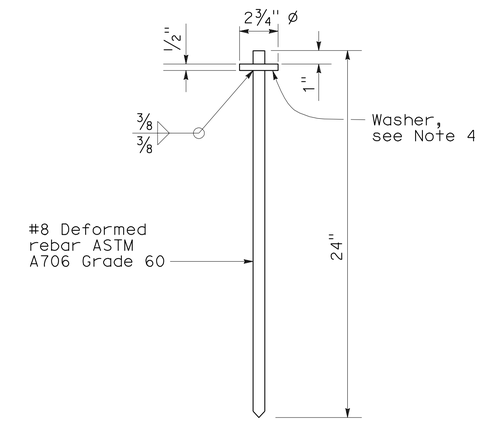

CAPPED STAKE DETAIL

STATE OF CALIFORNIA
DEPARTMENT OF TRANSPORTATION

TEMPORARY RAILING (TYPE K)

NO SCALE

NSP T3A DATED MAY 20, 2011 SUPPLEMENTS THE STANDARD PLANS BOOK DATED MAY 2006.

NEW STANDARD PLAN NSP T3A

2006 NEW STANDARD PLAN NSP T3A

DIST	COUNTY	ROUTE	POST MILES TOTAL PROJECT	SHEET NO.	TOTAL SHEETS
04	Ala,CC	4,80,84, 92,238,etc.	Var	127	141

LICENSED LANDSCAPE ARCHITECT

August 15, 2008
PLANS Approval DATE

LICENSED LANDSCAPE ARCHITECT
Robert B. Schott 3025
Signature
11-04-08
Renewal Date
08-11-08
Date
STATE OF CALIFORNIA

The State of California or its officers or agents shall not be responsible for the accuracy or completeness of electronic copies of this plan sheet.

To accompany plans dated 6-4-12

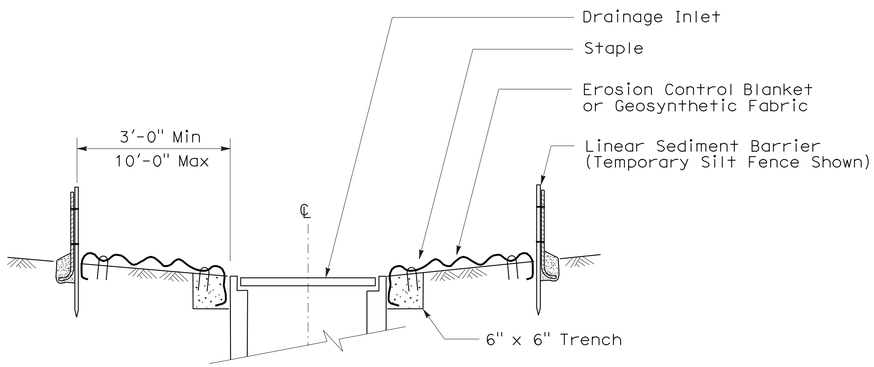

SECTION A-A

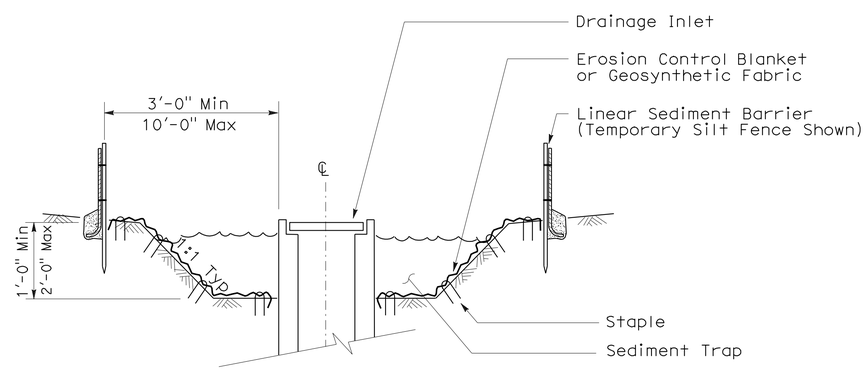

SECTION B-B

NOTES:

1. See Standard Plan T51 for Temporary Silt Fence.
2. Dimensions may vary to fit field conditions.

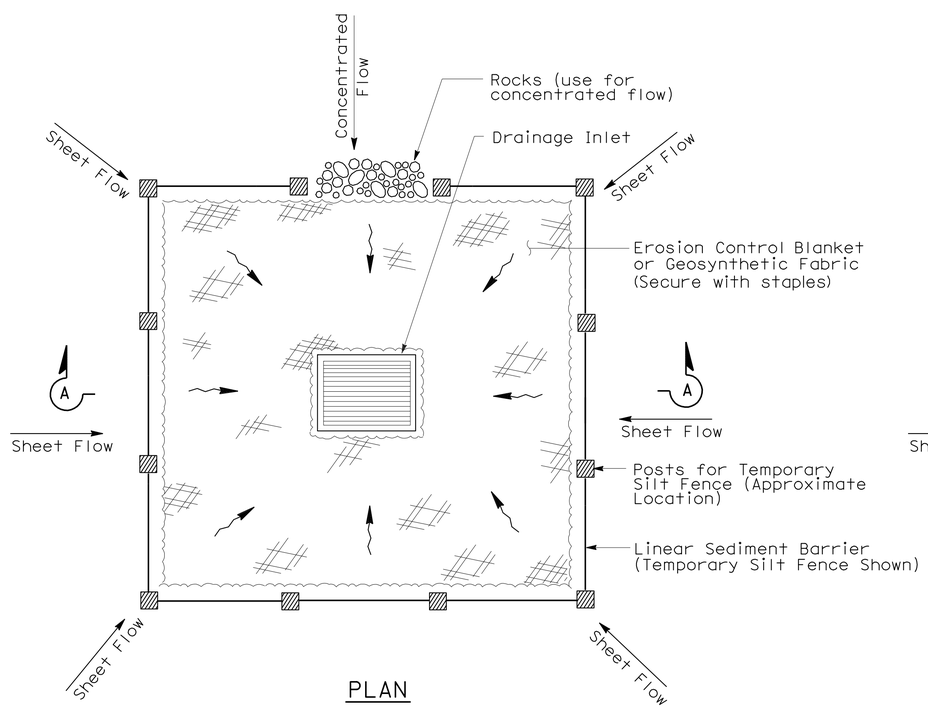

PLAN

TEMPORARY DRAINAGE INLET PROTECTION (TYPE 1)

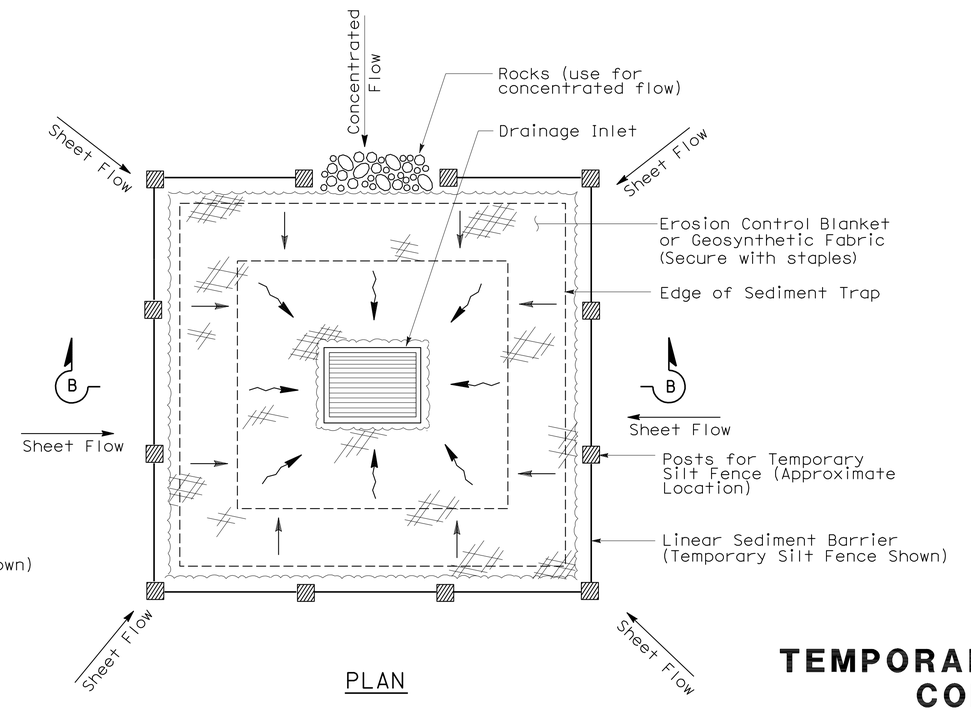

PLAN

TEMPORARY DRAINAGE INLET PROTECTION (TYPE 2) (EXCAVATED SEDIMENT TRAP)

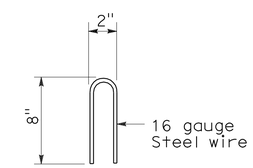

STAPLE DETAIL

STATE OF CALIFORNIA
DEPARTMENT OF TRANSPORTATION

TEMPORARY WATER POLLUTION CONTROL DETAILS (TEMPORARY DRAINAGE INLET PROTECTION)

NO SCALE

NSP T61 DATED AUGUST 15, 2008 SUPPLEMENTS THE STANDARD PLANS BOOK DATED MAY 2006.

NEW STANDARD PLAN NSP T61

2006 NEW STANDARD PLAN NSP T61

7-11-08

DIST	COUNTY	ROUTE	POST MILES TOTAL PROJECT	SHEET NO.	TOTAL SHEETS
04	Ala,CC	4,80,84, 92,238,etc.	Var	128	141

LICENSED LANDSCAPE ARCHITECT

August 15, 2008
PLANS APPROVAL DATE

The State of California or its officers or agents shall not be responsible for the accuracy or completeness of electronic copies of this plan sheet.

LICENSED LANDSCAPE ARCHITECT — Robert B. Schott — Signature — 11-04-08 Renewal Date — 08-11-08 Date — STATE OF CALIFORNIA

To accompany plans dated 6-4-12

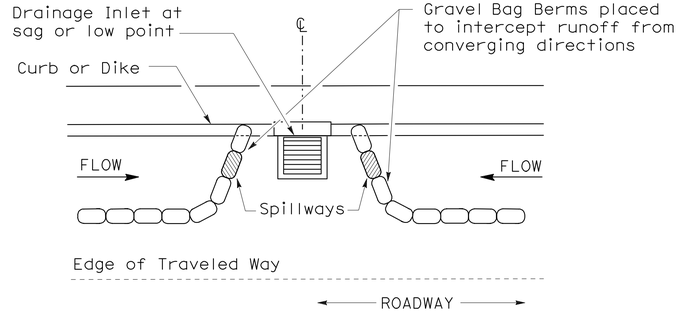

PLAN

CONFIGURATION FOR SAG POINT INLET (GRAVEL BAG BERM)

GRAVEL BAG BERM (TYPE 3A) SPACING TABLE

SLOPE OF ROADWAY (PERCENT)	1 to 3.9	4 to 5.9	6 to 7.9	8 to 10	10+
INTERVAL BETWEEN BERM	100′	75′	50′	25′	12′

For slope of less than 1%, install barriers only if erosion/sediment is prevalent

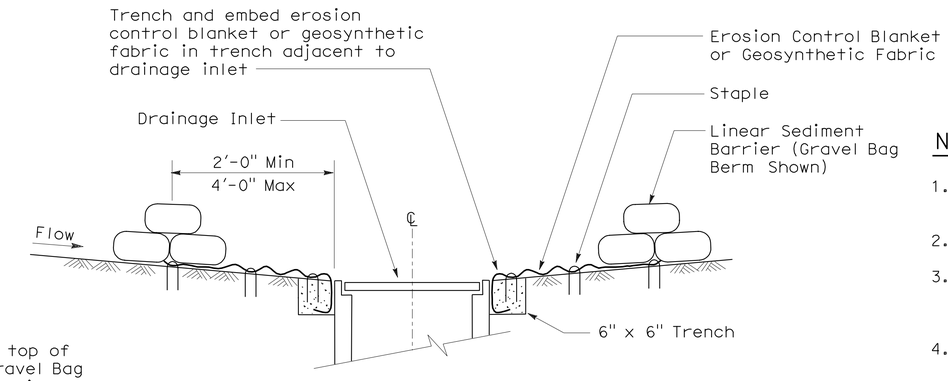

SECTION A-A

NOTES:

1. Place safety cones adjacent to drainage inlet protection.
2. Dimensions may vary to fit field conditions.
3. Install a minimum of 3 gravel bag berms upstream of each drainage inlet to be protected.
4. Position erosion control blanket or geosynthetic fabric at edge of concrete apron and secure in trench.
5. Erosion control blanket or geosynthetic fabric is not required if the area adjacent to the drainage inlet is vegetated or paved.

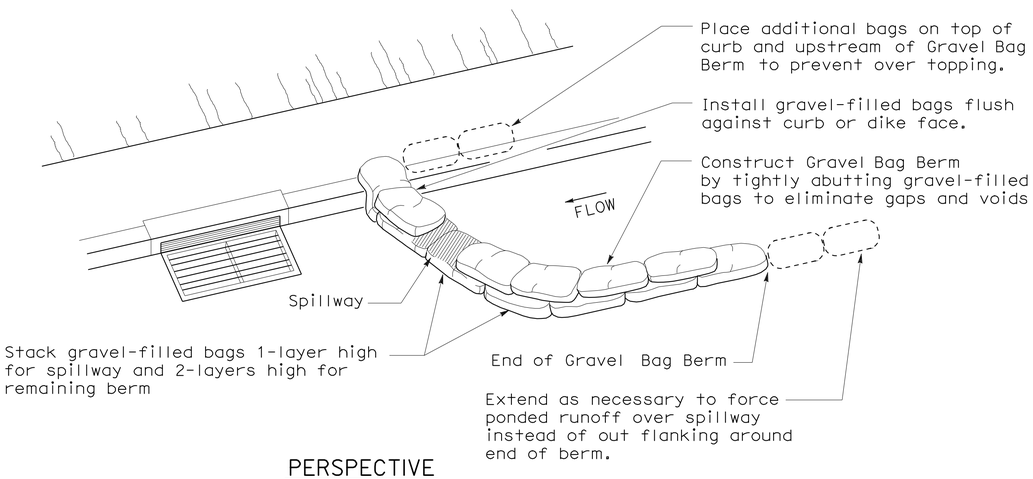

PERSPECTIVE

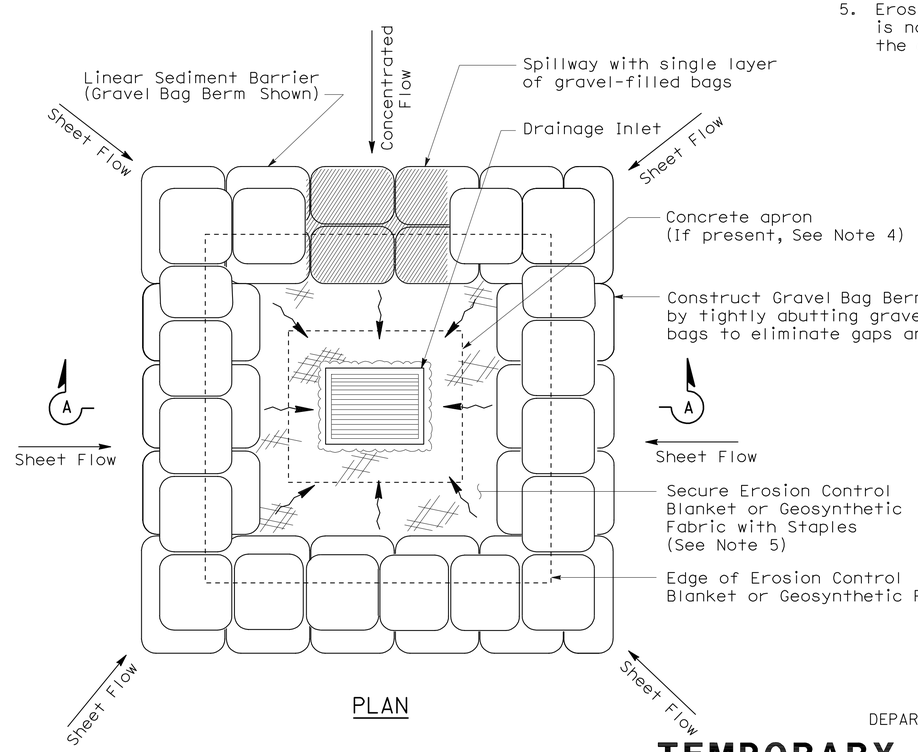

PLAN

TEMPORARY DRAINAGE INLET PROTECTION (TYPE 3B)

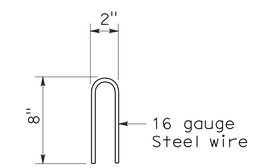

STAPLE DETAIL

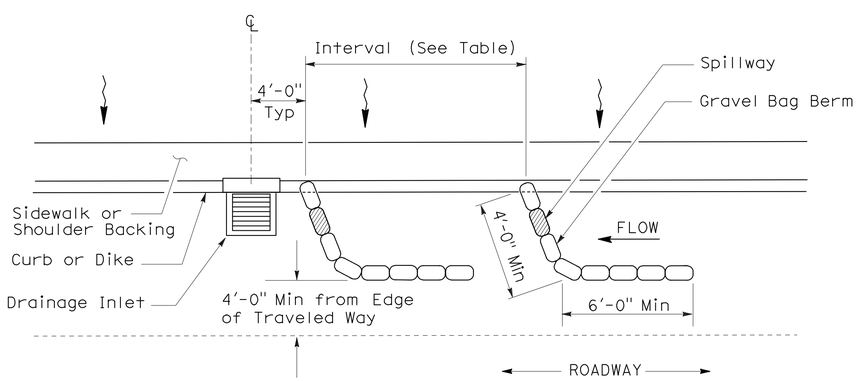

PLAN

TEMPORARY DRAINAGE INLET PROTECTION (TYPE 3A) (GRAVEL BAG BERM)

STATE OF CALIFORNIA
DEPARTMENT OF TRANSPORTATION

TEMPORARY WATER POLLUTION CONTROL DETAILS (TEMPORARY DRAINAGE INLET PROTECTION)

NO SCALE

NSP T62 DATED AUGUST 15, 2008 SUPPLEMENTS THE STANDARD PLANS BOOK DATED MAY 2006.

NEW STANDARD PLAN NSP T62

2006 NEW STANDARD PLAN NSP T62

7-11-08

DIST	COUNTY	ROUTE	POST MILES TOTAL PROJECT	SHEET NO.	TOTAL SHEETS
04	Ala,CC	4,80,84, 92,238,etc.	Var	129	141

LICENSED LANDSCAPE ARCHITECT

August 15, 2008
PLANS APPROVAL DATE

The State of California or its officers or agents shall not be responsible for the accuracy or completeness of electronic copies of this plan sheet.

LICENSED LANDSCAPE ARCHITECT Robert B. Schott 3025 Signature 11-04-08 Renewal Date 08-11-08 Date STATE OF CALIFORNIA

To accompany plans dated 6-4-12

FLEXIBLE SEDIMENT BARRIER SPACING TABLE

SLOPE OF ROADWAY (PERCENT)	0 to 0.9	1 to 1.9	2 to 2.9	3 to 4	5+
INTERVAL BETWEEN BARRIERS	50′	35′	30′	25′	20′
ANGLE FROM FACE OF CURB	70°	70°	70°	45°	45°
SUGGESTED BARRIER LENGTH	6′	6′	6′	6′	6′

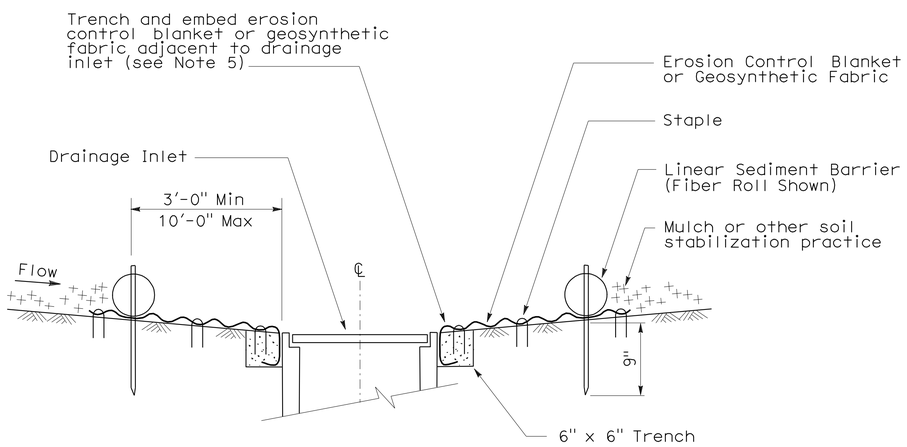

SECTION A-A

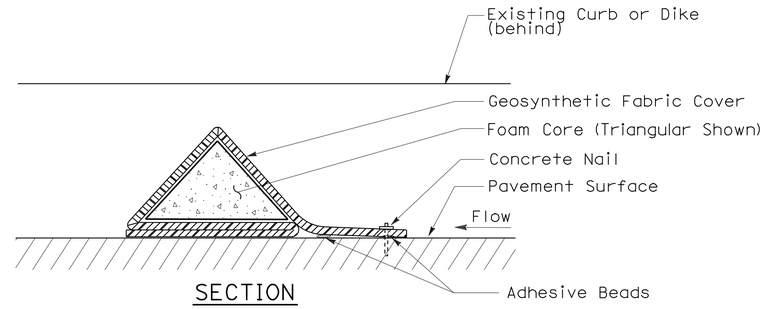

SECTION

FLEXIBLE SEDIMENT BARRIER DETAIL (FOAM BARRIER SHOWN)

NOTES:

1. See Standard Plan T51 for Temporary Silt Fence.
2. Dimensions may vary to fit field conditions.
3. Install a minimum of 3 flexible sediment barriers upstream of each drainage inlet to be protected.
4. Position erosion control blanket or geosynthetic fabric at edge of concrete apron and secure in trench.
5. Erosion control blanket or geosynthetic fabric is not required if the area adjacent to the drainage inlet is vegetated.

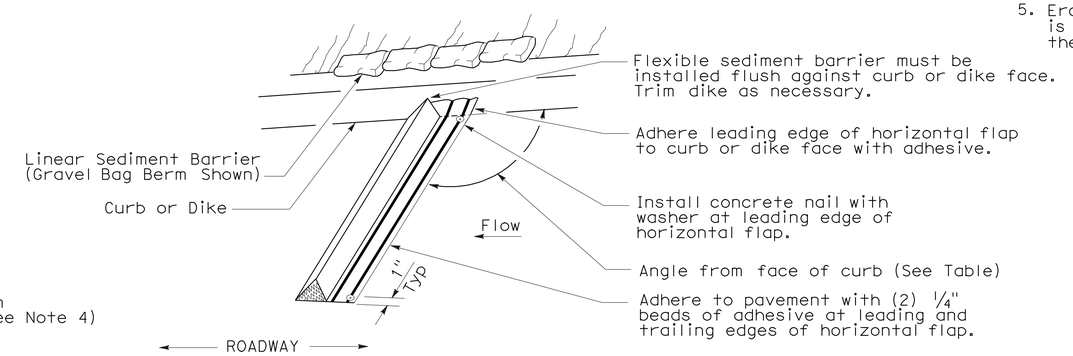

PERSPECTIVE

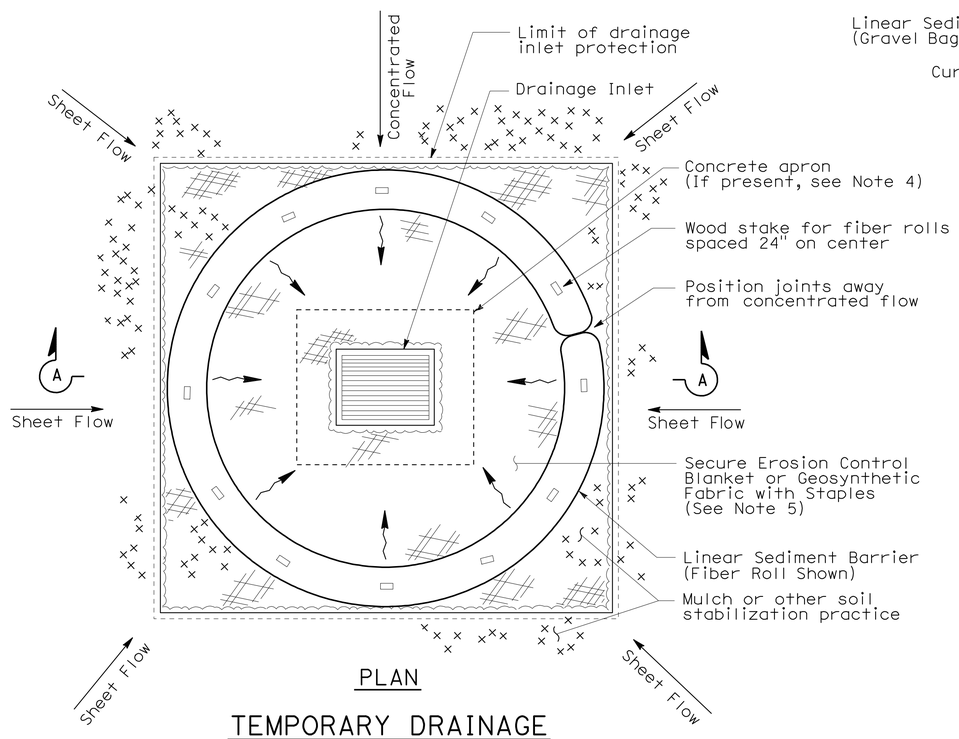

PLAN

TEMPORARY DRAINAGE INLET PROTECTION (TYPE 4A)

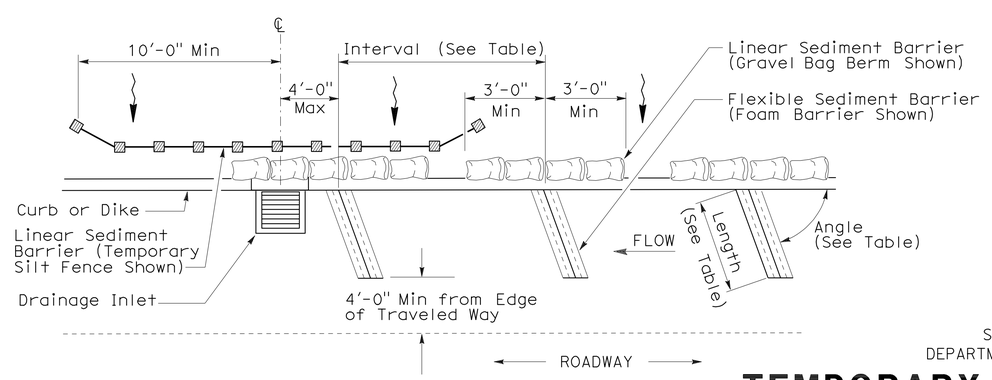

PLAN

TEMPORARY DRAINAGE INLET PROTECTION (TYPE 4B) FLEXIBLE SEDIMENT BARRIER

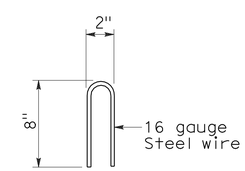

STAPLE DETAIL

STATE OF CALIFORNIA
DEPARTMENT OF TRANSPORTATION

TEMPORARY WATER POLLUTION CONTROL DETAILS (TEMPORARY DRAINAGE INLET PROTECTION)

NO SCALE

NSP T63 DATED AUGUST 15, 2008 SUPPLEMENTS THE STANDARD PLANS BOOK DATED MAY 2006.

NEW STANDARD PLAN NSP T63

2006 NEW STANDARD PLAN NSP T63

7-11-08

DIST	COUNTY	ROUTE	POST MILES TOTAL PROJECT	SHEET NO.	TOTAL SHEETS
04	Ala,CC	4,80,84, 92,238,etc.	Var	130	141

LICENSED LANDSCAPE ARCHITECT

August 15, 2008
PLANS APPROVAL DATE

LICENSED LANDSCAPE ARCHITECT — Robert B. Schott — Signature 11-04-08 Renewal Date — 08-11-08 Date — STATE OF CALIFORNIA

The State of California or its officers or agents shall not be responsible for the accuracy or completeness of electronic copies of this plan sheet.

To accompany plans dated 6-4-12

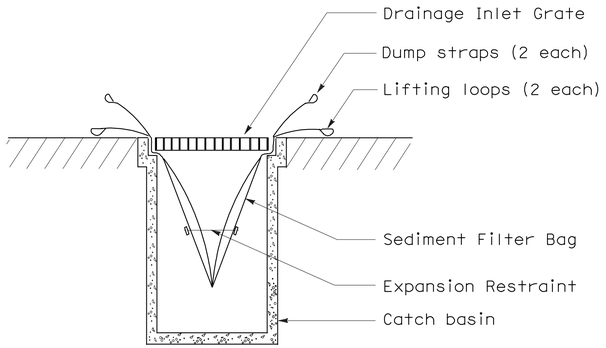

SECTION B-B

SEDIMENT FILTER BAG DETAIL

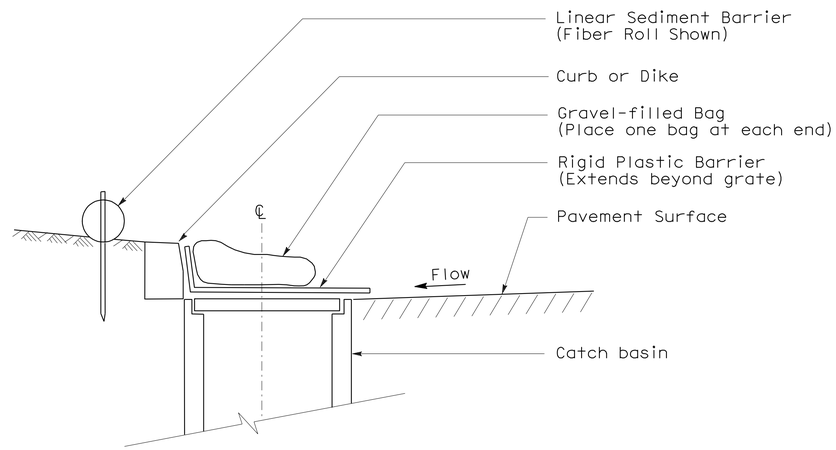

SECTION

TEMPORARY DRAINAGE INLET PROTECTION (TYPE 6A) (CATCH BASIN WITH GRATE)

NOTES:

1. See Standard Plan T51 for Temporary Silt Fence.
2. Dimensions may vary to fit field conditions.

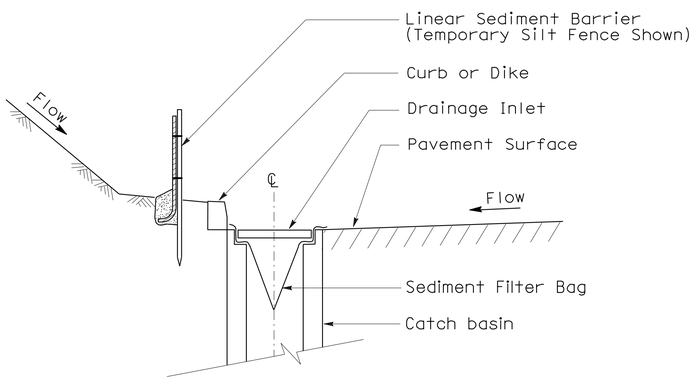

SECTION A-A

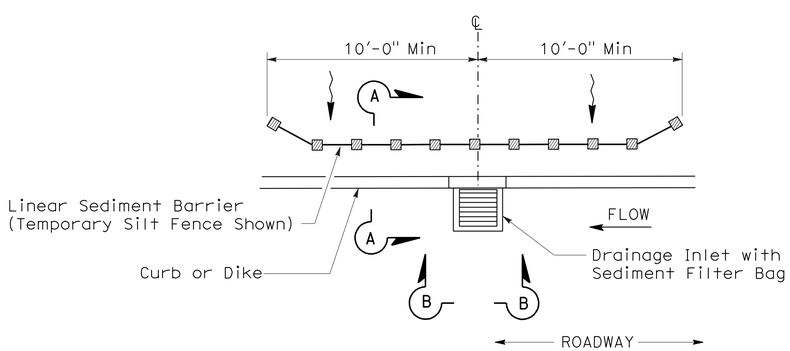

PLAN

TEMPORARY DRAINAGE INLET PROTECTION (TYPE 5) (SEDIMENT FILTER BAG)

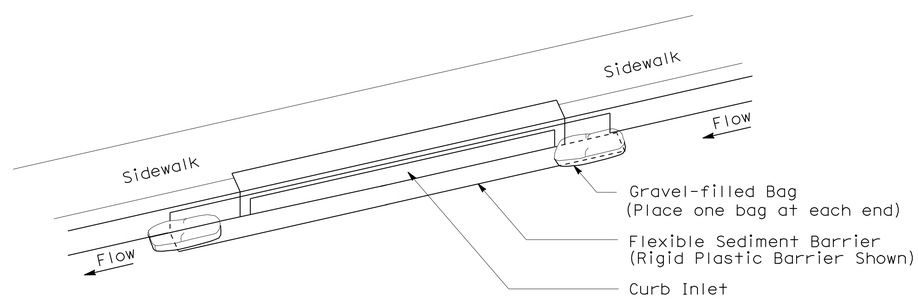

PERSPECTIVE

TEMPORARY DRAINAGE INLET PROTECTION (TYPE 6B) (CURB INLET WITHOUT GRATE)

STATE OF CALIFORNIA
DEPARTMENT OF TRANSPORTATION

TEMPORARY WATER POLLUTION CONTROL DETAILS (TEMPORARY DRAINAGE INLET PROTECTION)

NO SCALE

NSP T64 DATED AUGUST 15, 2008 SUPPLEMENTS THE STANDARD PLANS BOOK DATED MAY 2006.

NEW STANDARD PLAN NSP T64

2006 NEW STANDARD PLAN NSP T64

DIST	COUNTY	ROUTE	POST MILES TOTAL PROJECT	SHEET No.	TOTAL SHEETS
04	Ala,CC	4,80,84, 92,238,etc.	Var	131	141

Genaro M. Doria 2-17-12
REGISTERED CIVIL ENGINEER DATE

6-4-12
PLANS APPROVAL DATE

REGISTERED PROFESSIONAL ENGINEER GENARO M. DORIA No. C63583 Exp. 9/30/12 CIVIL STATE OF CALIFORNIA

The State of California or its officers or agents shall not be responsible for the accuracy or completeness of electronic copies of this plan sheet.

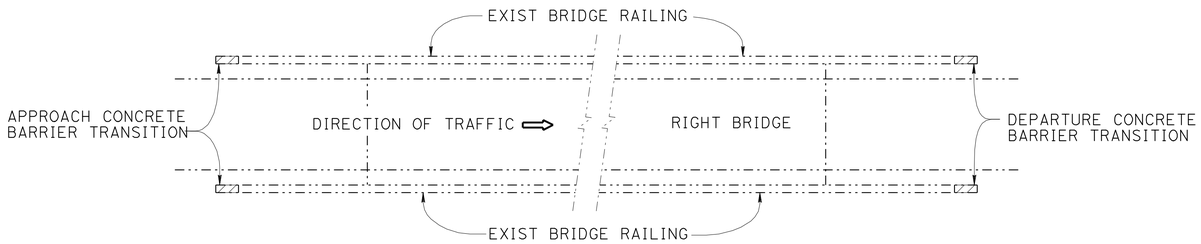

ONE WAY BRIDGES (PLAN A)

NO SCALE

NOTE:
FOR REMOVAL OF EXISTING AND PLACEMENT OF NEW MBGR SEE ROAD PLANS

QUANTITIES

MISCELLANEOUS METAL (BRIDGE)	798	LB
CONCRETE BARRIER (TRANSITION)	121	LF
CONCRETE BARRIER (TYPE 60 MOD.)	24	LF

INDEX TO PLANS

SHEET No.	TITLE
1	CONCRETE BARRIER TRANSITION - GENERAL PLAN, INDEX TO PLANS
2	EDENVALE UNDERPASS CONCRETE BARRIER TRANSITION - LOCATION PLAN, MISC DETAILS 1
3	EDENVALE UNDERPASS CONCRETE BARRIER TRANSITION - MISCELLANEOUS DETAILS 2
4	TYPE 50D CONCRETE BARRIER TRANSITION - LOCATION TABLE & MISCELLANEOUS DETAILS
5	UNIVERSITY AVE BRIDGE CONCRETE BARRIER TRANSITION - LOCATION PLAN, MISC. DETAILS
6	EL CERRITO OVERHEAD CONCRETE BARRIER TRANSITION - LOCATION PLAN, MISC. DETAILS
7	DAMON SLOUGH BRIDGE CONCRETE BARRIER TRANSITION - LOCATION PLAN, MISC. DETAILS
8	23RD AVE OC NORTH CONCRETE BARRIER TRANSITION - LOCATION PLAN, MISC. DETAILS
9	WASHINGTON AVE BRIDGE CONCRETE BARRIER TRANSITION - LOCATION PLAN, MISC. DETAILS
10	SHEFFIELD AVE OC CONCRETE BARRIER TRANSITION - LOCATION PLAN, MISC. DETAILS
11	KELLER AVE CONCRETE BARRIER TRANSITION - MISCELLANEOUS DETAILS

STANDARD PLANS DATED MAY 2006

A10A	ACRONYMS AND ABBREVIATIONS (SHEET 1 OF 2)
A10B	ACRONYMS AND ABBREVIATIONS (SHEET 2 OF 2)
RSP A76G	CONCRETE BARRIER TYPE 60S
RSP A77J2	METAL BEAM GUARD RAILING CONNECTIONS TO BRIDGE RAILINGS WITHOUT SIDEWALKS DETAILS NO. 2
RSP A77J4	METAL BEAM GUARD RAILING TRANSITION RAILING (TYPE WB)

NOTES:

1. See "ROAD PLANS" for site locations
2. See "ROAD PLANS" for new curbs, structural AC placement, gutters and drainage inlet relocations. This note for all locations.

JAMES SAGAR
DESIGN ENGINEER

	BY	CHECKED
DESIGN	G DORIA	Y SONG
DETAILS	P C WELLS	G DORIA
QUANTITIES	G DORIA	Y SONG

LOAD & RESISTANCE FACTOR DESIGN — LIVE LOADING: HL93 W/"LOW-BOY": PERMIT DESIGN VEHICLE
LAYOUT — BY G DORIA — CHECKED PAUL SNYDER
SPECIFICATIONS — BY REBECCA FRANTI — PLANS AND SPECS COMPARED

ORIGINAL SCALE IN INCHES FOR REDUCED PLANS 0 1 2 3

STATE OF CALIFORNIA
DEPARTMENT OF TRANSPORTATION

DIVISION OF ENGINEERING SERVICES
STRUCTURE DESIGN
SPECIAL DESIGNS BRANCH

BRIDGE NO. VARIES
POST MILE VARIES

CONCRETE BARRIER TRANSITION
GENERAL PLAN, INDEX

UNIT: 3619
PROJECT NUMBER & PHASE: 0400000164
CONTRACT NO.: 04-0a7901

DISREGARD PRINTS BEARING EARLIER REVISION DATES
REVISION DATES 11-02-11 1-25-12 5-23-12

SHEET 1 OF 11

USERNAME => s124496 DATE PLOTTED => 04-JUN-2012 TIME PLOTTED => 15:22

STRUCTURES DESIGN GENERAL PLAN SHEET (ENGLISH) (REV.09-01-10)

FILE => 04-0a7901-00a-gp01.dgn

DIST	COUNTY	ROUTE	POST MILES TOTAL PROJECT	SHEET No.	TOTAL SHEETS
04	Ala,CC	4,80,84, 92,238,etc.	Var	132	141

REGISTERED CIVIL ENGINEER — DATE 2-17-12

6-4-12
PLANS APPROVAL DATE

The State of California or its officers or agents shall not be responsible for the accuracy or completeness of electronic copies of this plan sheet.

REGISTERED PROFESSIONAL ENGINEER — GENARO M. DORIA — No. C63583 — Exp. 9/30/12 — CIVIL — STATE OF CALIFORNIA

LEGEND

Indicates existing structure

Indicates new construction

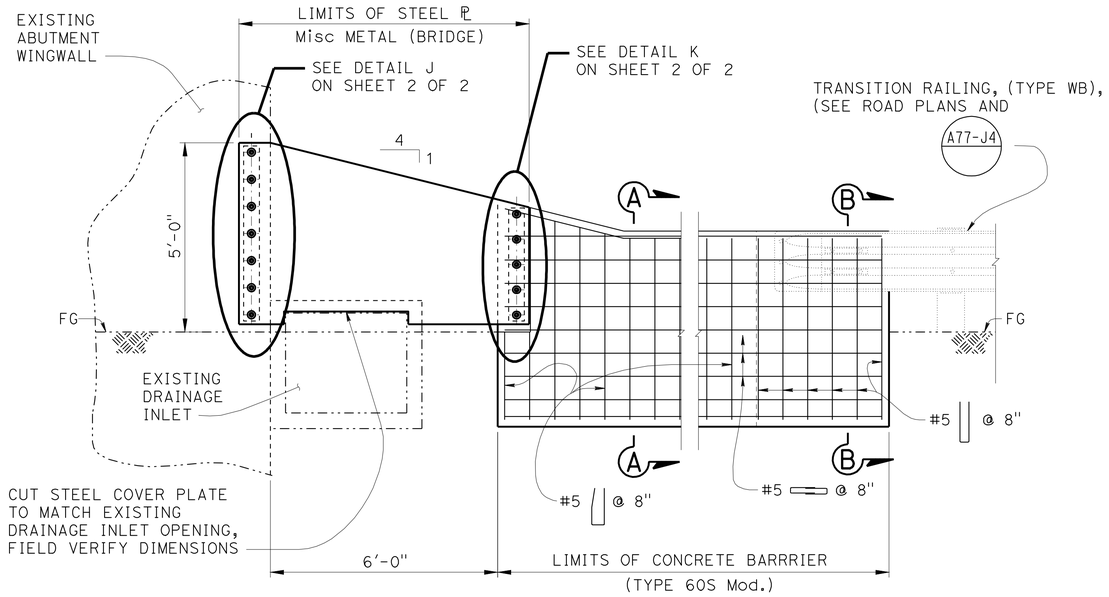

ELEVATION

3/8" = 1'-0"

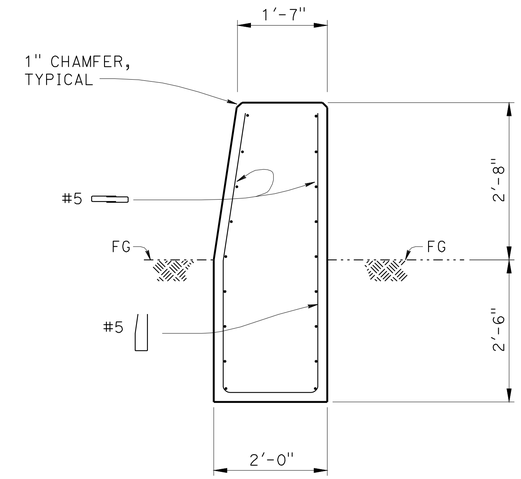

SECTION A-A

1/2" = 1'-0"

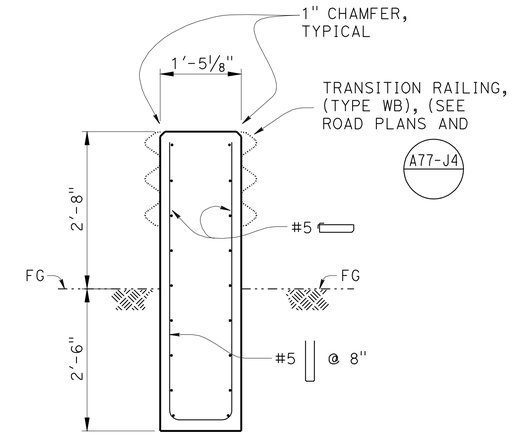

SECTION B-B

1/2" = 1'-0"

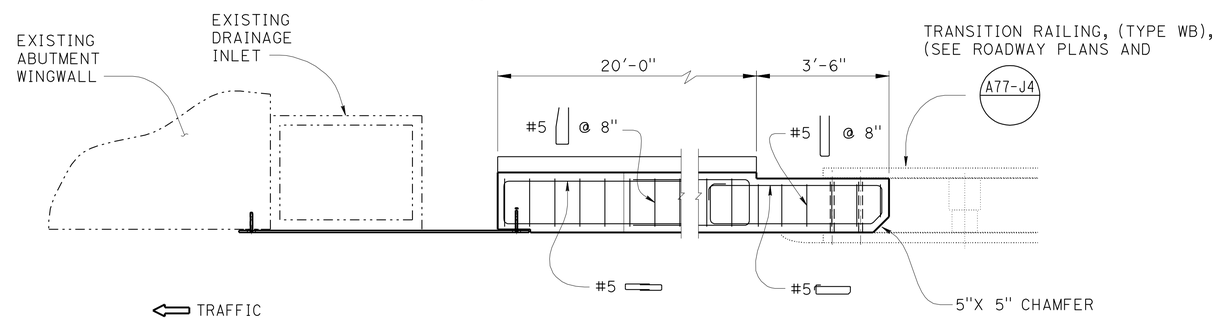

PLAN

3/8" = 1'-0"

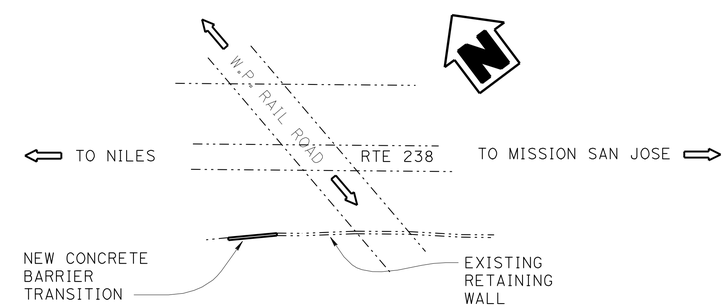

LOCATION PLAN

NO SCALE

NOTES:

1. For details not shown, see Concrete Barrier Type 60S, Standard Plans May 2006.
2. Minimum 1" cover, typical.
3. See INDEX sheet and SITE PLAN sheet for Plan Type.
4. Patch any existing bolt holes from MBGR with cement mortar.
5. See "ROAD PLANS" for exact location.
6. This is project location 41.
7. All reinforcing to be galvanized.
8. Steel Plate to be galvanized.

THE CONTRACTOR SHALL VERIFY ALL CONTROLLING FIELD DIMENSIONS BEFORE ORDERING OR FABRICATING ANY MATERIAL.

	BY	CHECKED
DESIGN	Y SONG	G DORIA
DETAILS	P C WELLS	Y SONG
QUANTITIES	Y SONG	G DORIA

STATE OF CALIFORNIA
DEPARTMENT OF TRANSPORTATION

DIVISION OF ENGINEERING SERVICES
STRUCTURE DESIGN
SPECIAL DESIGN BRANCH

BRIDGE NO. 33-0002
POST MILE 2.19

EDENVALE UNDERPASS CONCRETE BARRIER (TYPE 60S MOD)
LOCATION PLAN, & MISCELLANEOUS DETAILS

STRUCTURES DESIGN SPECIAL DESIGN SHEET (ENGLISH) (REV. 09-01-10)

ORIGINAL SCALE IN INCHES FOR REDUCED PLANS 0 1 2 3

UNIT: 3619
PROJECT NUMBER & PHASE: 0400000164
CONTRACT NO.: 04-0A7901

DISREGARD PRINTS BEARING EARLIER REVISION DATES

REVISION DATES: 11-02-11 5-23-12

SHEET 2 OF 11

FILE => 04-0a7901-02-19a.dgn

USERNAME => s124436 DATE PLOTTED => 04-JUN-2012 TIME PLOTTED => 15:22

DIST	COUNTY	ROUTE	POST MILES TOTAL PROJECT	SHEET No.	TOTAL SHEETS
04	Ala,CC	4,80,84, 92,238,etc.	Var	133	141

REGISTERED CIVIL ENGINEER — DATE 2-17-12

6-4-12
PLANS APPROVAL DATE

REGISTERED PROFESSIONAL ENGINEER GENARO M. DORIA No. C63583 Exp. 9/30/12 CIVIL STATE OF CALIFORNIA

The State of California or its officers or agents shall not be responsible for the accuracy or completeness of electronic copies of this plan sheet.

LEGEND

Indicates existing structure

Indicates new construction

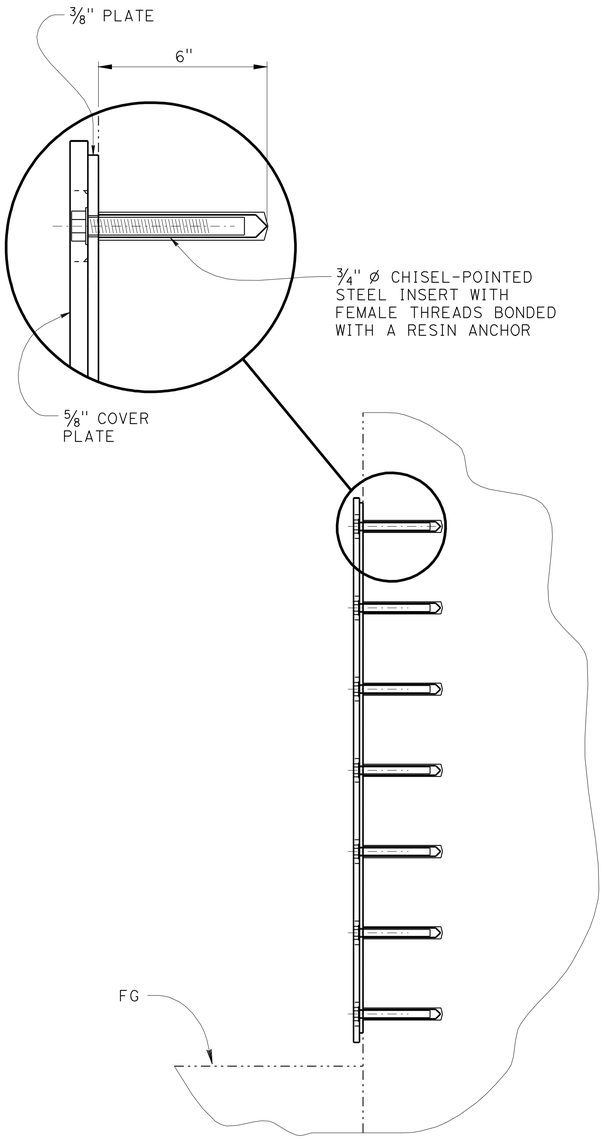

SECTION J-J

1½" = 1'

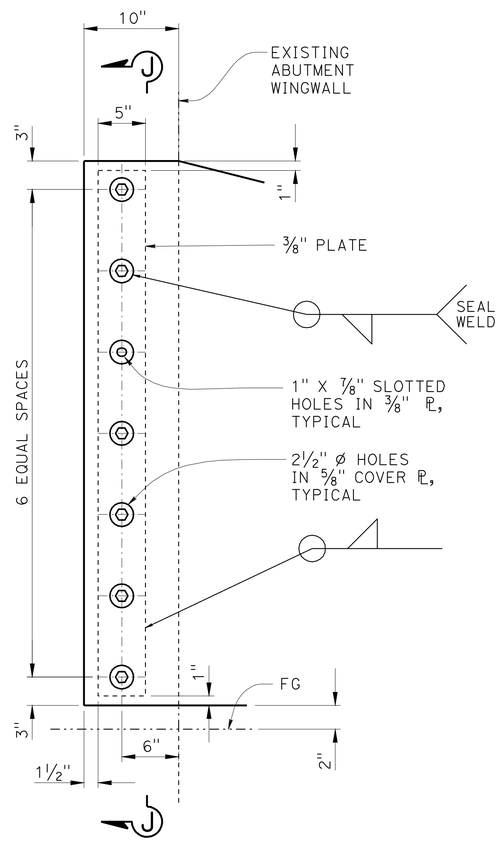

PLATE DETAIL J

1½" = 1'

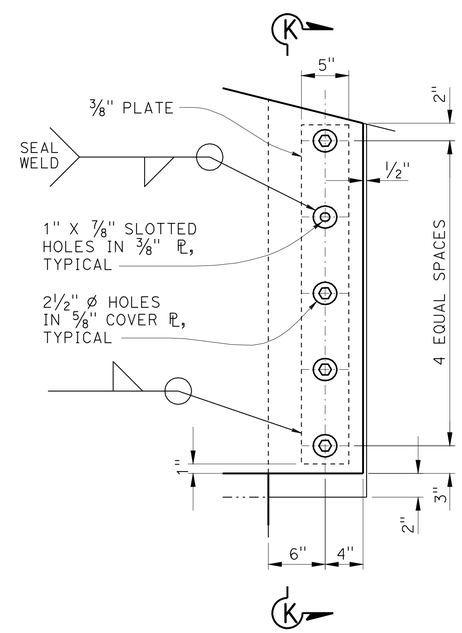

PLATE DETAIL K

1½" = 1'

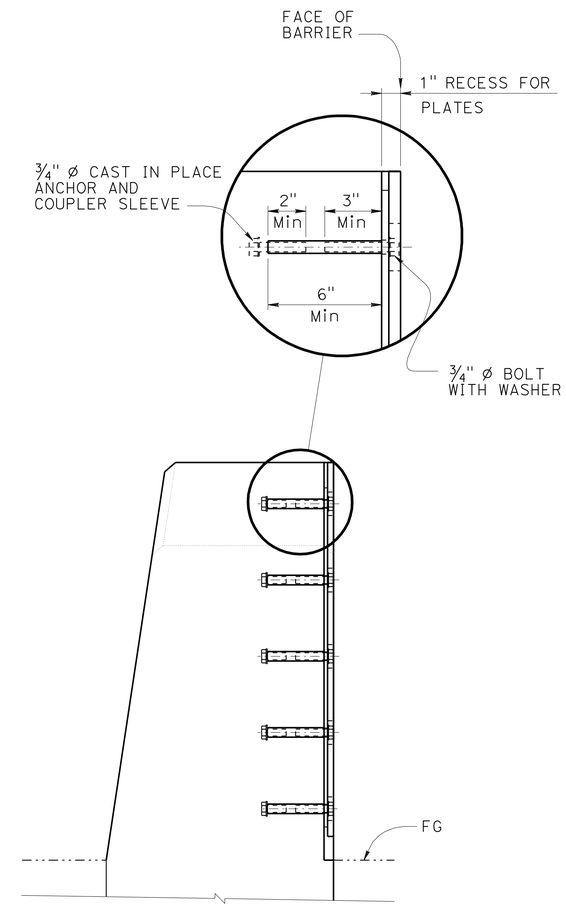

SECTION K-K

1½" = 1'

THE CONTRACTOR SHALL VERIFY ALL CONTROLLING FIELD DIMENSIONS BEFORE ORDERING OR FABRICATING ANY MATERIAL.

	BY	CHECKED
DESIGN	Y SONG	G DORIA
DETAILS	P C WELLS	Y SONG
QUANTITIES	Y SONG	G DORIA

STATE OF CALIFORNIA
DEPARTMENT OF TRANSPORTATION

DIVISION OF ENGINEERING SERVICES
STRUCTURE DESIGN
SPECIAL DESIGN BRANCH

BRIDGE NO. 33-0002
POST MILE 2.19

EDENVALE UNDERPASS CONCRETE BARRIER (TRANSITION)

MISCELLANEOUS DETAILS 2

STRUCTURES DESIGN SPECIAL DESIGN SHEET (ENGLISH) (REV. 09-01-10)

ORIGINAL SCALE IN INCHES FOR REDUCED PLANS 0 1 2 3

UNIT: 3619
PROJECT NUMBER & PHASE: 0400000164

CONTRACT NO.: 04-0A7901

DISREGARD PRINTS BEARING EARLIER REVISION DATES

REVISION DATES 11-02-11 1-25-12

SHEET 3 OF 11

FILE => 04-0a7901-02-19b.dgn

USERNAME => s124436 DATE PLOTTED => 04-JUN-2012 TIME PLOTTED => 15:22

DIST	COUNTY	ROUTE	POST MILES TOTAL PROJECT	SHEET No.	TOTAL SHEETS
04	Ala,CC	4,80,84, 92,238,etc.	Var	134	141

REGISTERED CIVIL ENGINEER — DATE 2-17-12

6-4-12
PLANS APPROVAL DATE

REGISTERED PROFESSIONAL ENGINEER GENARO M. DORIA No. C63583 Exp. 9/30/12 CIVIL STATE OF CALIFORNIA

The State of California or its officers or agents shall not be responsible for the accuracy or completeness of electronic copies of this plan sheet.

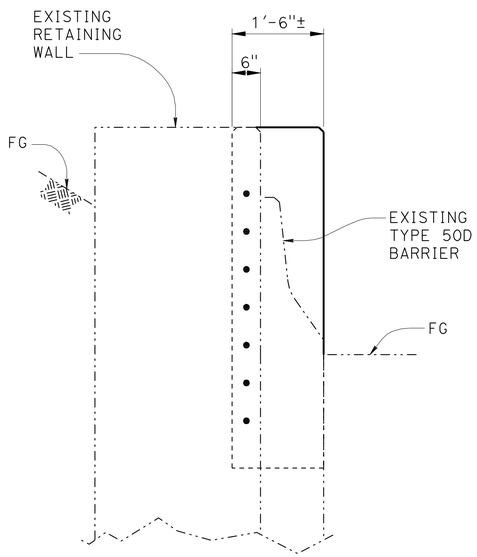

SECTION A-A
½" = 1'-0"

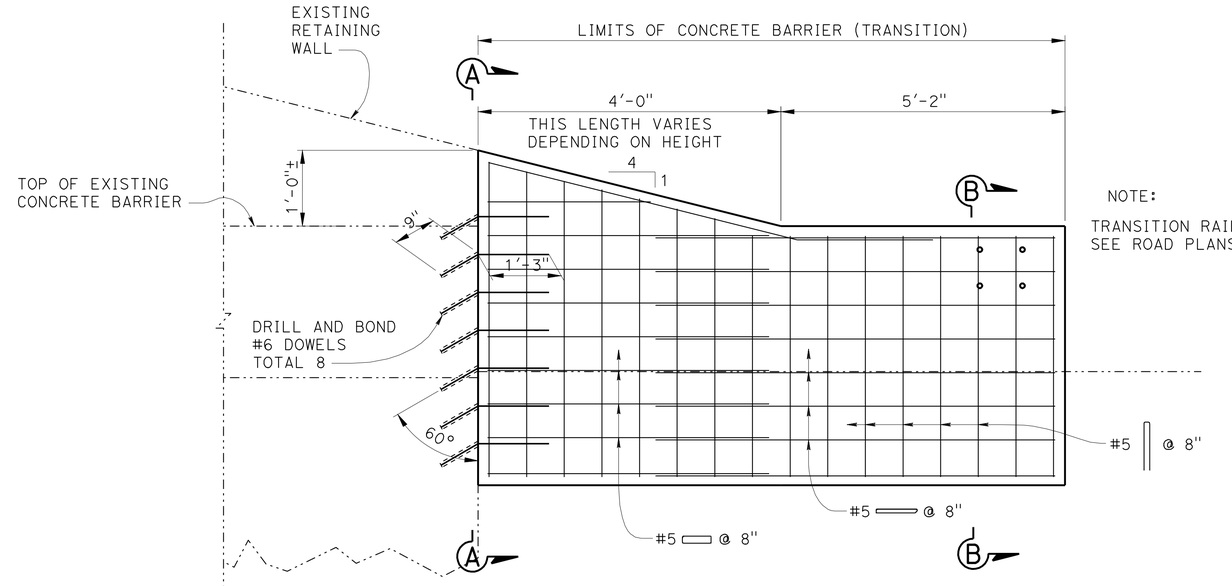

NOTE:
TRANSITION RAILING, (TYPE WB), SEE ROAD PLANS AND A77-J4

ELEVATION
⅜" = 1'-0"

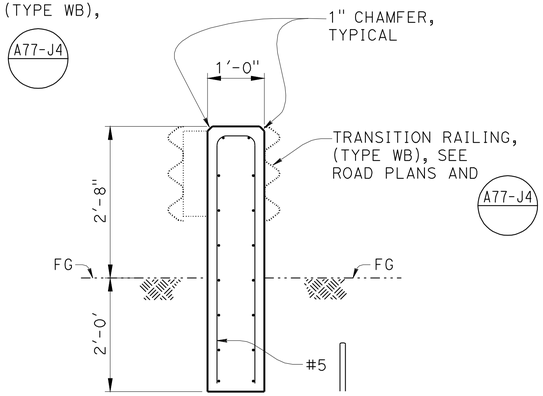

SECTION B-B
½" = 1'-0"

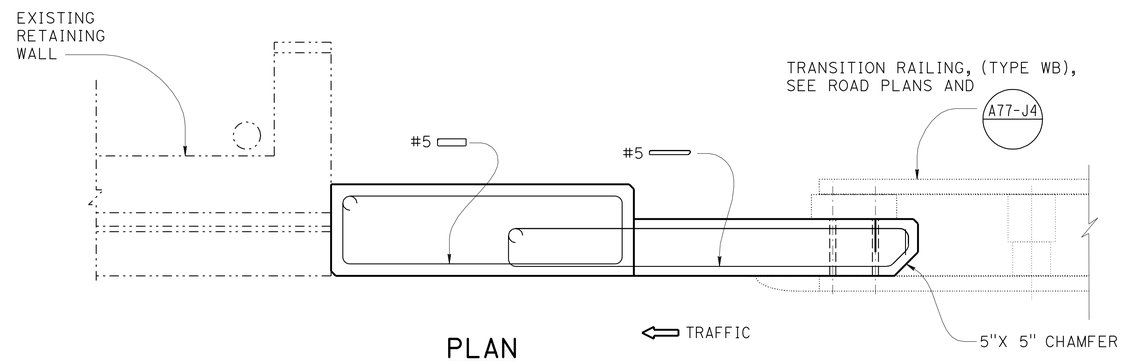

PLAN
⅜" = 1'-0"

LEGEND

-·-·-·- Indicates existing structure

——— Indicates new construction

NOTES:

1. Minimum 1" cover, typical.
2. See INDEX sheet and SITE PLAN sheet for Plan Type.
3. Patch any existing bolt holes from MBGR with cement mortar.
4. See 'Road Plans" for exact locations.
5. All reinforcing to be galvanized.

THE CONTRACTOR SHALL VERIFY ALL CONTROLLING FIELD DIMENSIONS BEFORE ORDERING OR FABRICATING ANY MATERIAL.

CONCRETE BARRIER TRANSITION LOCATION TABLE

Location No.	Site Name	Route	Post Mile	Direction	No. of "WB" connections @ Approach End	No. of "WB" connections @ Departure End	CONCRETE BARRIER (TRANSITION) (LF)
120	NB 880 On-ramp from NB Freemont Blvd	880	3.24	NB	1		9
				SB			
10	EB Off-ramp to SB Bailey Rd.	4	19.88	EB	2		18
				WB			
141	NB On-ramp from EB Tennyson Rd.	880	15.52	NB	1		9
				SB			
142	SB On-ramp from WB Tennyson Rd.	880	15.77	NB			9
				SB	1		
145	NB Off-ramp to A Street	880	18.23	NB	1		9
				SB			
146	SB Off-ramp to A Street	880	18.48	NB			9
				SB	1		

	BY	CHECKED
DESIGN	G DORIA	Y SONG
DETAILS	P C WELLS	G DORIA
QUANTITIES	G DORIA	Y SONG

STATE OF CALIFORNIA
DEPARTMENT OF TRANSPORTATION

DIVISION OF ENGINEERING SERVICES
STRUCTURE DESIGN
SPECIAL DESIGN BRANCH

BRIDGE NO. N/A
POST MILE VARIES

TYPE 50D CONCRETE BARRIER (TRANSITION)
LOCATION TABLE & MISCELLANEOUS DETAILS

STRUCTURES DESIGN SPECIAL DESIGN SHEET (ENGLISH) (REV. 09-01-10)

ORIGINAL SCALE IN INCHES FOR REDUCED PLANS 0 1 2 3

UNIT: 3619
PROJECT NUMBER & PHASE: 0400000164
CONTRACT NO.: 04-0a7901

DISREGARD PRINTS BEARING EARLIER REVISION DATES

REVISION DATES: 11-02-11 1-3-12 5-23-12

SHEET 4 OF 11

FILE => 04-0a7901-15-19.dgn

USERNAME => s124436 DATE PLOTTED => 04-JUN-2012 TIME PLOTTED => 15:22

DIST	COUNTY	ROUTE	POST MILES TOTAL PROJECT	SHEET No.	TOTAL SHEETS
04	Ala,CC	4,80,84, 92,238,etc.	Var	135	141

Genaro M. Doria 2-17-12
REGISTERED CIVIL ENGINEER DATE

6-4-12
PLANS APPROVAL DATE

REGISTERED PROFESSIONAL ENGINEER GENARO M. DORIA No. C63583 Exp. 9/30/12 CIVIL STATE OF CALIFORNIA

The State of California or its officers or agents shall not be responsible for the accuracy or completeness of electronic copies of this plan sheet.

NOTE:
TRANSITION RAILING, (TYPE WB), NOT SHOWN FOR CLARITY. (SEE ROAD PLANS AND A77-J4)

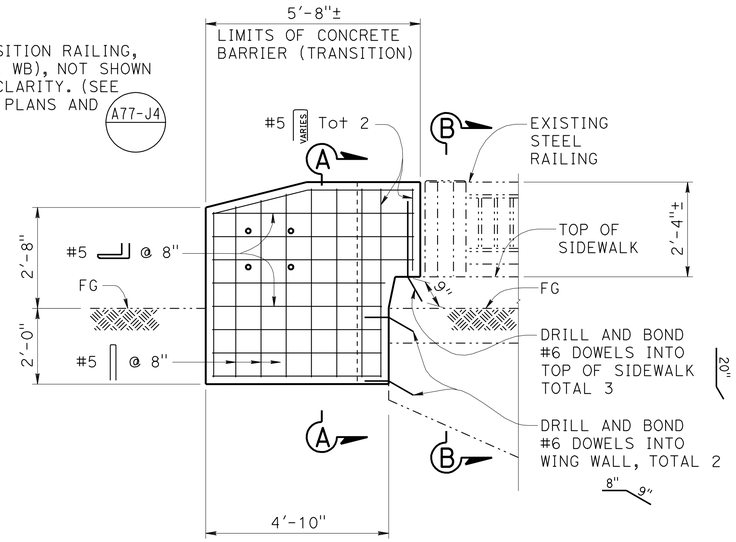

ELEVATION
½" = 1'-0"

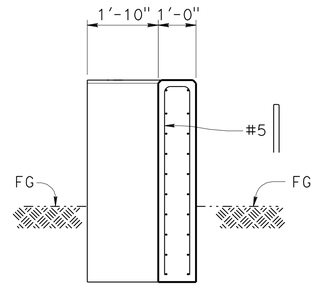

SECTION A-A
½" = 1'-0"

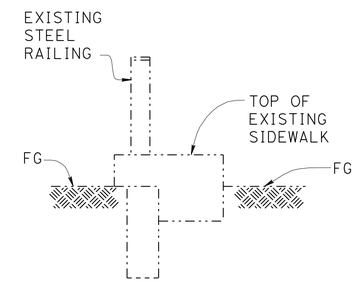

SECTION B-B
½" = 1'-0"

LEGEND

-·-·- Indicates existing structure

——— Indicates new construction

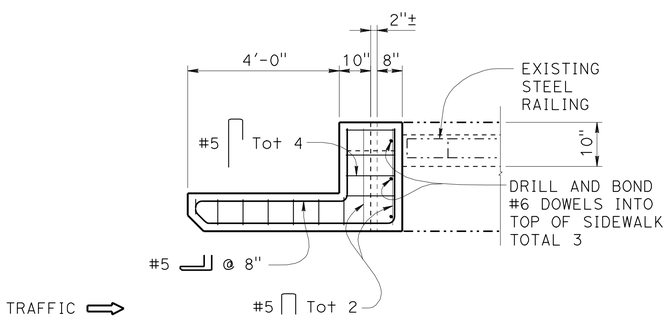

PLAN
½" = 1'-0"

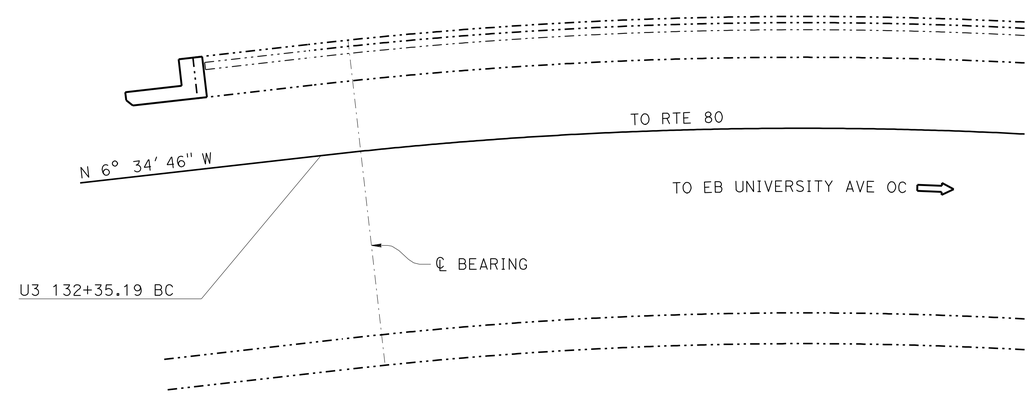

LOCATION PLAN
3/16" = 1'-0"

NOTES:

1. Minimum 1" cover, typical.
2. Patch any existing bolt holes from MBGR with cement mortar.
3. See "ROAD PLANS" for exact location.
4. This is Project Location 16.
5. All reinforcing to be galvanized.

THE CONTRACTOR SHALL VERIFY ALL CONTROLLING FIELD DIMENSIONS BEFORE ORDERING OR FABRICATING ANY MATERIAL.

	BY	CHECKED
DESIGN	G DORIA	Y SONG
DETAILS	P WELLS	G DORIA
QUANTITIES	G DORIA	Y SONG

STATE OF CALIFORNIA
DEPARTMENT OF TRANSPORTATION

DIVISION OF ENGINEERING SERVICES
STRUCTURE DESIGN
SPECIAL DESIGN BRANCH

BRIDGE NO. 33-0023
POST MILE 5.70

UNIVERSITY AVE BRIDGE CONCRETE BARRIER (TRANSITION)
LOCATION PLAN & MISCELLANEOUS DETAILS

STRUCTURES DESIGN SPECIAL DESIGN SHEET (ENGLISH) (REV. 09-01-10)

ORIGINAL SCALE IN INCHES FOR REDUCED PLANS 0 1 2 3

UNIT: 3619
PROJECT NUMBER & PHASE: 0400000164
CONTRACT NO.: 04-0A7901

DISREGARD PRINTS BEARING EARLIER REVISION DATES

REVISION DATES: 11-02-11 1-3-12 5-23-12

SHEET 5 OF 11

DIST	COUNTY	ROUTE	POST MILES TOTAL PROJECT	SHEET No.	TOTAL SHEETS
04	Ala,CC	4,80,84, 92,238,etc.	Var	136	141

REGISTERED CIVIL ENGINEER — DATE 2-17-12

6-4-12
PLANS APPROVAL DATE

REGISTERED PROFESSIONAL ENGINEER GENARO M. DORIA No. C63583 Exp. 9/30/12 CIVIL STATE OF CALIFORNIA

The State of California or its officers or agents shall not be responsible for the accuracy or completeness of electronic copies of this plan sheet.

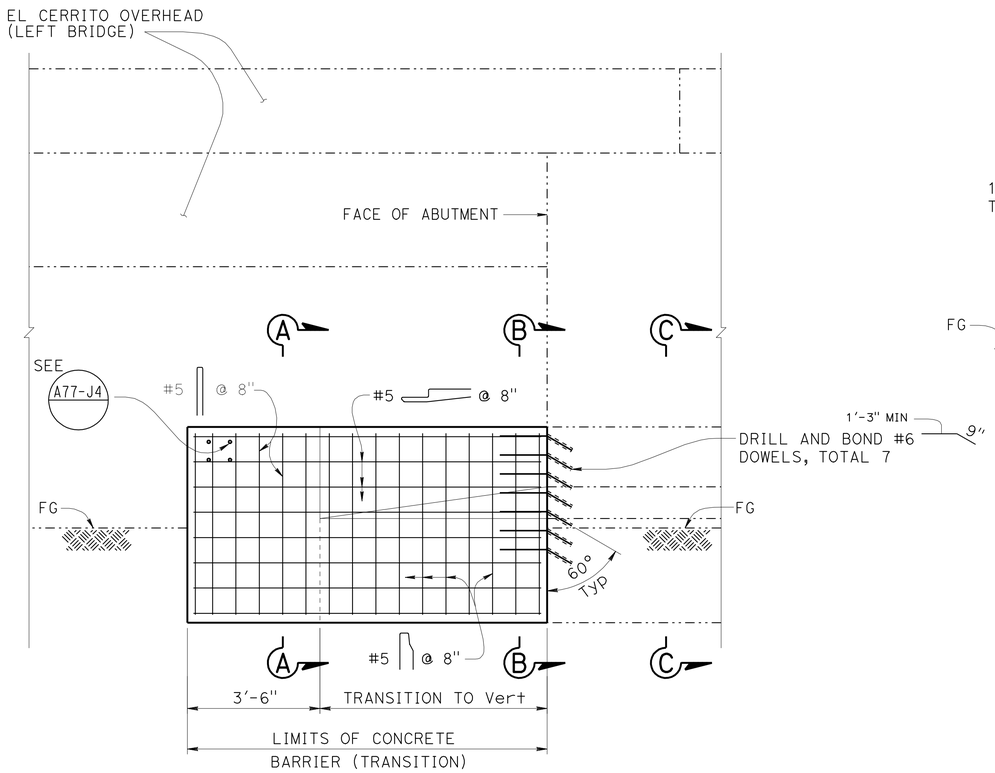

ELEVATION
½" = 1'-0"

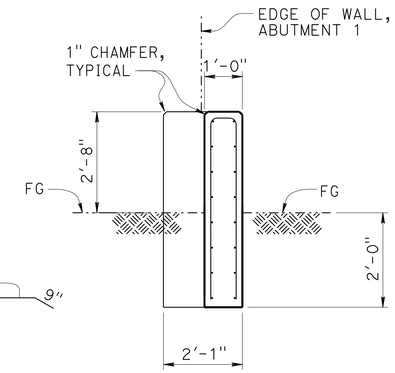

SECTION A-A
½" = 1'-0"

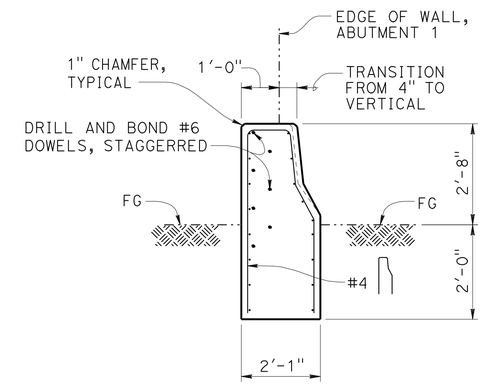

SECTION B-B
1/2 " = 1'-0"

LEGEND

Indicates existing structure

Indicates new construction

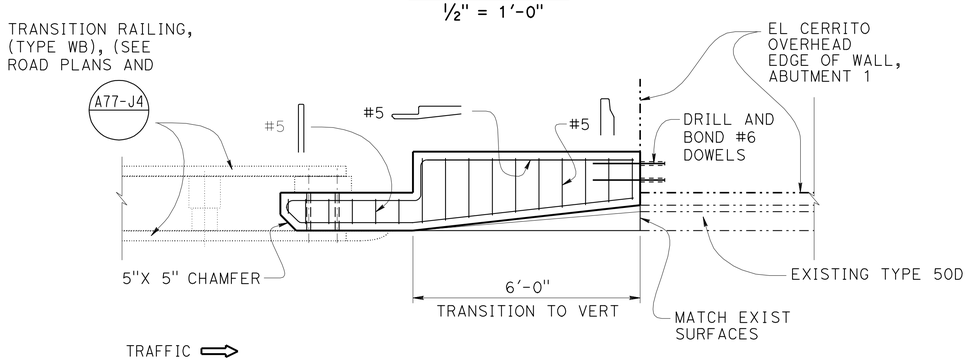

PLAN
½" = 1'-0"

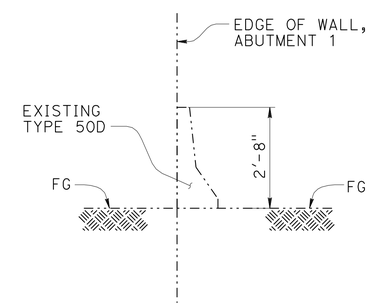

SECTION C-C
½" = 1'-0"

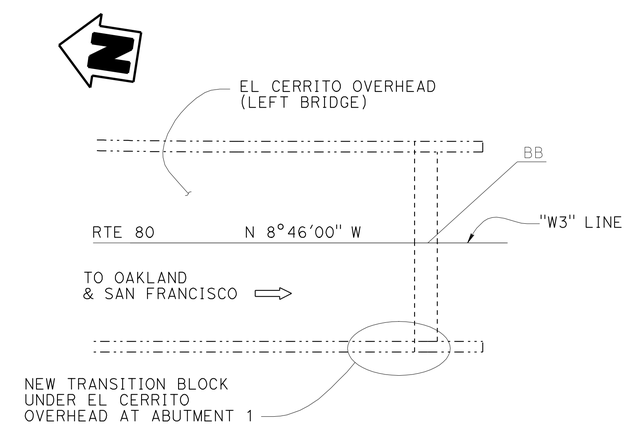

LOCATION PLAN
NO SCALE

NOTES:

1. Minimum 1" cover, typical.
2. All plates and bolts are galvanized.
3. See "Road Plans" for exact location.
4. This is Project Location 18.
5. All reinforcing to be galvanized.

THE CONTRACTOR SHALL VERIFY ALL CONTROLLING FIELD DIMENSIONS BEFORE ORDERING OR FABRICATING ANY MATERIAL.

	BY	CHECKED
DESIGN	G DORIA	Y SONG
DETAILS	P WELLS	G DORIA
QUANTITIES	G DORIA	Y SONG

STATE OF CALIFORNIA
DEPARTMENT OF TRANSPORTATION

DIVISION OF ENGINEERING SERVICES
STRUCTURE DESIGN
SPECIAL DESIGN BRANCH

BRIDGE NO. 33-0051
POST MILE 7.11

EL CERRITO OVERHEAD CONCRETE BARRIER (TRANSITION)
LOCATION PLAN & MISCELLANEOUS DETAILS

STRUCTURES DESIGN SPECIAL DESIGN SHEET (ENGLISH) (REV. 09-01-10)

ORIGINAL SCALE IN INCHES FOR REDUCED PLANS 0 1 2 3

UNIT: 3619
PROJECT NUMBER & PHASE: 0400000164
CONTRACT NO.: 04-0A7901

DISREGARD PRINTS BEARING EARLIER REVISION DATES

REVISION DATES: 11-02-11 1-3-12 1-25-12 5-23-12

SHEET 6 OF 11

FILE => spec_des-br-proj/misc/paul/hold 04-0a7901-33-0051.dgn

USERNAME => s124496 DATE PLOTTED => 04-JUN-2012 TIME PLOTTED => 15:22

DIST	COUNTY	ROUTE	POST MILES TOTAL PROJECT	SHEET No.	TOTAL SHEETS
04	Ala,CC	4,80,84, 92,238,etc.	Var	137	141

Genaro M. Doria 2-17-12
REGISTERED CIVIL ENGINEER DATE

6-4-12
PLANS APPROVAL DATE

REGISTERED PROFESSIONAL ENGINEER GENARO M. DORIA No. C63583 Exp. 9/30/12 CIVIL STATE OF CALIFORNIA

The State of California or its officers or agents shall not be responsible for the accuracy or completeness of electronic copies of this plan sheet.

NOTE:
NEW TRANSITION RAILING (TYPE WB) NOT SHOWN FOR CLARITY. SEE ROAD PLANS AND A77-J4

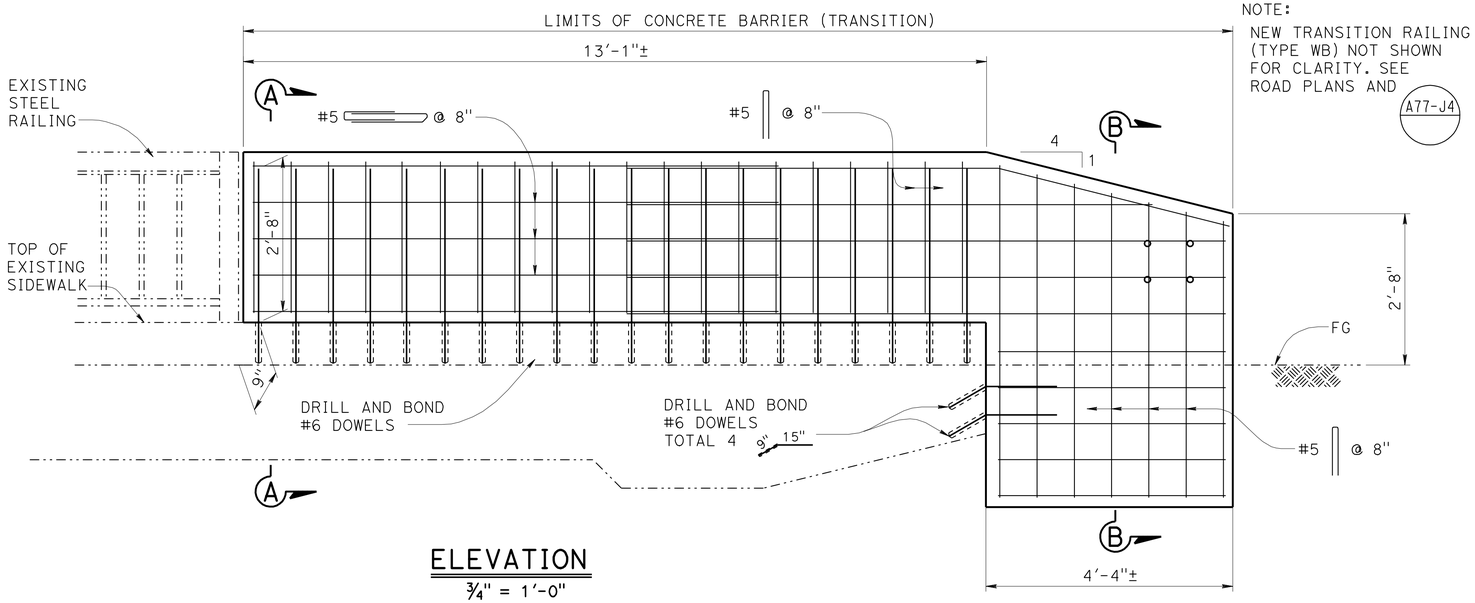

ELEVATION
3/4" = 1'-0"

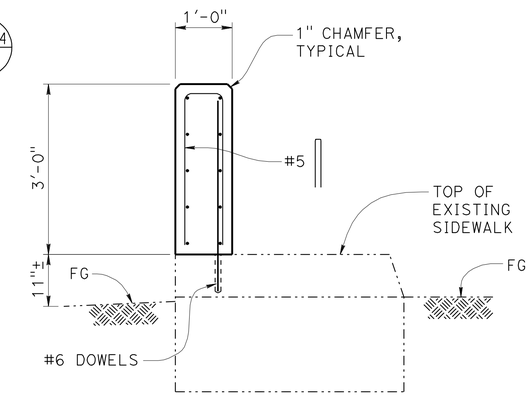

SECTION A-A
3/4" = 1'-0"

LEGEND

Indicates existing structure

Indicates new construction

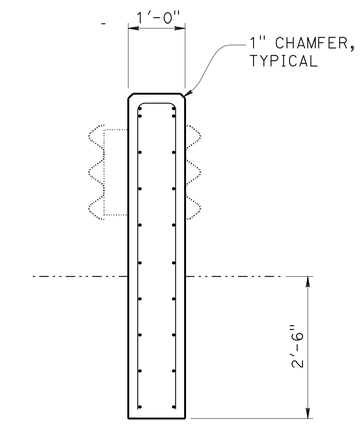

SECTION B-B
3/4" = 1'-0"

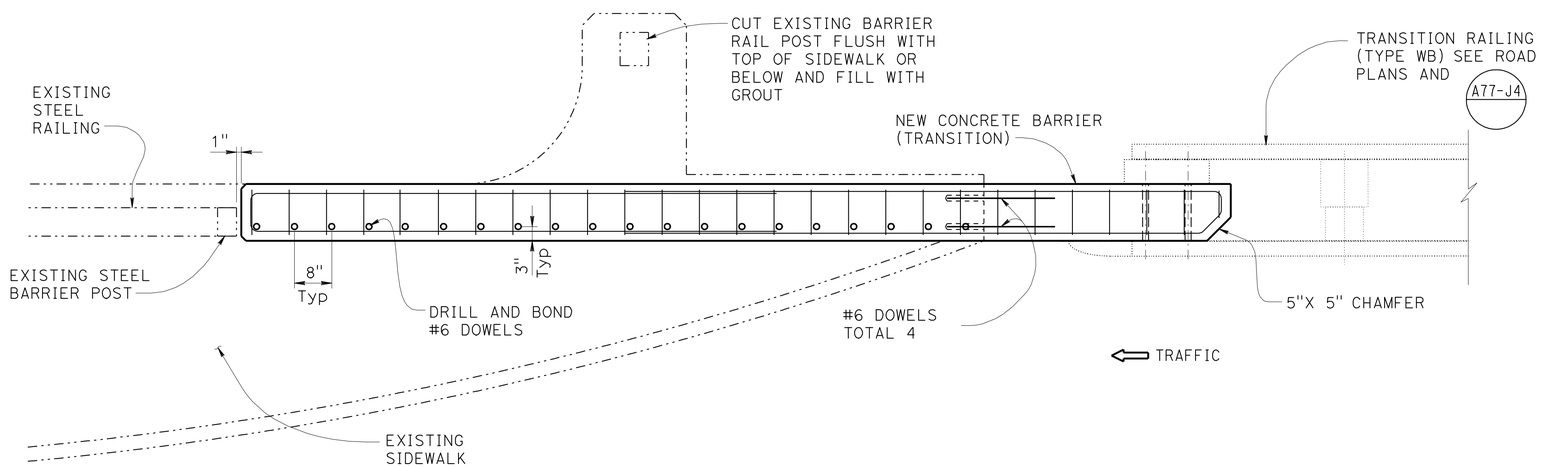

PLAN
3/4" = 1'-0"

NOTES:

1. Minimum 1" cover, typical.
2. Patch any existing bolt holes from MBGR with cement mortar.
3. See "ROAD PLANS" for exact location.
4. This is project Location 164.
5. All reinforcing to be galvanized.

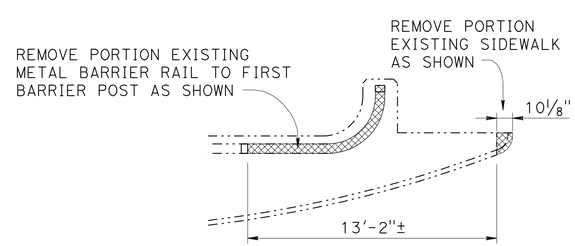

DEMOLITION PLAN
1/4" = 1'-0"

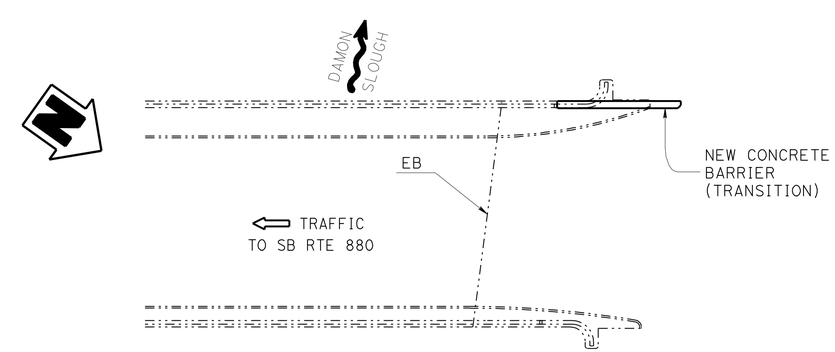

LOCATION PLAN
3/4" = 1'-0"

THE CONTRACTOR SHALL VERIFY ALL CONTROLLING FIELD DIMENSIONS BEFORE ORDERING OR FABRICATING ANY MATERIAL.

	BY	CHECKED
DESIGN	GENARO DORIA	YU SONG
DETAILS	P C WELLS	GENARO DORIA
QUANTITIES	GENARO DORIA	YU SONG

STATE OF CALIFORNIA
DEPARTMENT OF TRANSPORTATION

DIVISION OF ENGINEERING SERVICES
STRUCTURE DESIGN
SPECIAL DESIGN BRANCH

BRIDGE NO. 33-0142K
POST MILE 26.58

DAMON SLOUGH BRIDGE CONCRETE BARRIER (TRANSITION)
LOCATION PLAN & MISCELLANEOUS DETAILS

ORIGINAL SCALE IN INCHES FOR REDUCED PLANS 0 1 2 3

UNIT: 3619
PROJECT NUMBER & PHASE: 0400000164
CONTRACT NO.: 04-0A7901

DISREGARD PRINTS BEARING EARLIER REVISION DATES

REVISION DATES 11-02-11 1-5-12 1-25-12 5-23-12

SHEET 7 OF 11

FILE => 04-0a7901-33-0142k.dgn

USERNAME => s124496 DATE PLOTTED => 04-JUN-2012 TIME PLOTTED => 15:22

STRUCTURES DESIGN GENERAL PLAN SHEET (ENGLISH) (REV.09-01-10)

DIST	COUNTY	ROUTE	POST MILES TOTAL PROJECT	SHEET No.	TOTAL SHEETS
04	Ala,CC	4,80,84, 92,238,etc.	Var	138	141

REGISTERED CIVIL ENGINEER — DATE 2-17-12

6-4-12
PLANS APPROVAL DATE

REGISTERED PROFESSIONAL ENGINEER GENARO M. DORIA No. C63583 Exp. 9/30/12 CIVIL STATE OF CALIFORNIA

The State of California or its officers or agents shall not be responsible for the accuracy or completeness of electronic copies of this plan sheet.

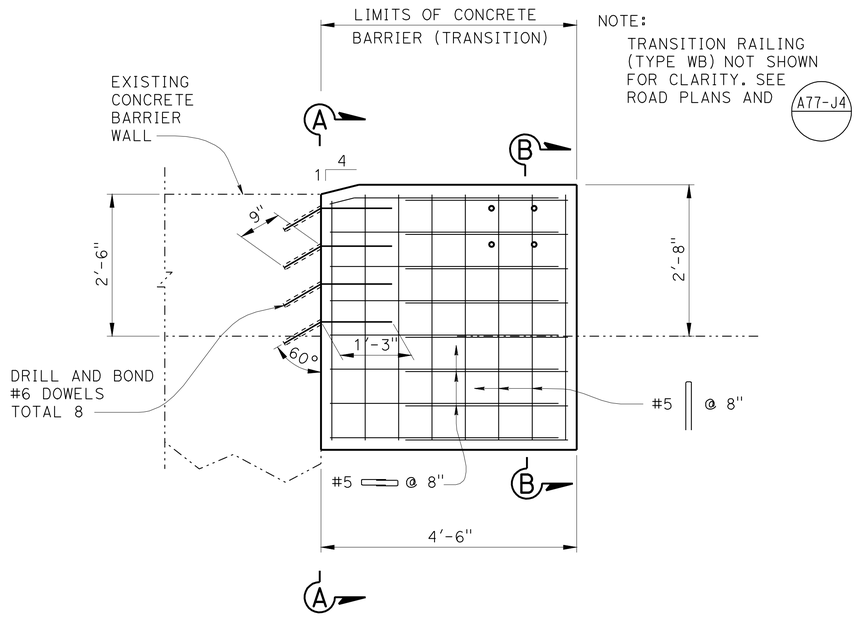

ELEVATION
3/8" = 1'-0"

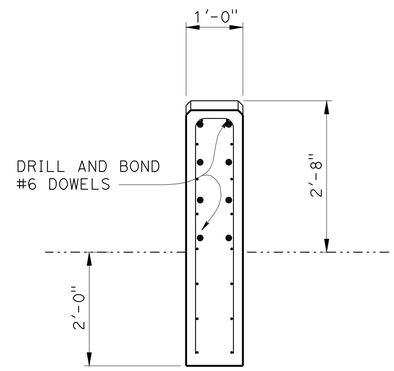

SECTION A-A
1/2" = 1'-0"

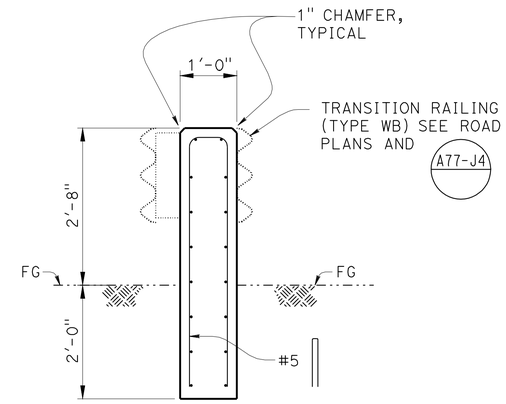

SECTION B-B
1/2" = 1'-0"

LEGEND

Indicates existing structure

Indicates new construction

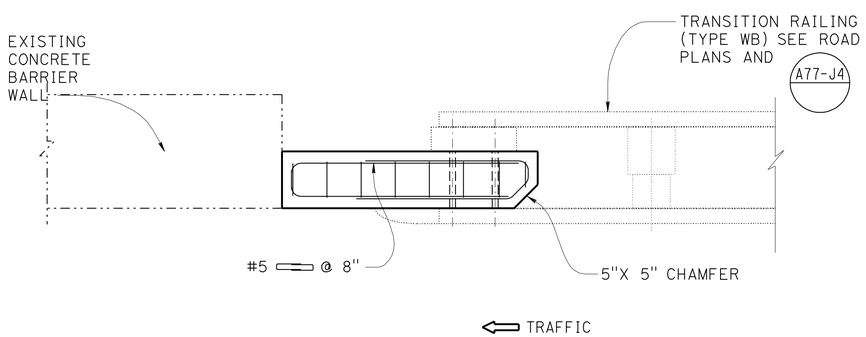

PLAN
3/8" = 1'-0"

NOTES:

1. Minimum 1" cover, typical.
2. See INDEX sheet and SITE PLAN sheet for PLAN Type.
3. Patch any existing bolt holes from MBGR with cement mortar.
4. All reinforcing to be galvanized.

CONCRETE BARRIER TRANSITION LOCATION TABLE

Location No.	Street Name	Route	Post Mile	Direction	No. of "WB" connections @ Approach End	No. of "WB" connections @ Departure End	CONCRETE BARRIER (TRANSITION) (LF)
166	NB 880 On-ramp from EB 23rd AVE	880	29.10	NB	2		9.0
				SB			

THE CONTRACTOR SHALL VERIFY ALL CONTROLLING FIELD DIMENSIONS BEFORE ORDERING OR FABRICATING ANY MATERIAL.

	BY	CHECKED
DESIGN	Y SONG	G DORIA
DETAILS	P C WELLS	Y SONG
QUANTITIES	Y SONG	G DORIA

STATE OF CALIFORNIA
DEPARTMENT OF TRANSPORTATION

DIVISION OF ENGINEERING SERVICES
STRUCTURE DESIGN
SPECIAL DESIGN BRANCH

BRIDGE NO. 33-0149
POST MILE 29.10

23RD AVE OC NORTH CONCRETE BARRIER (TRANSITION)
MISCELLANEOUS DETAILS

STRUCTURES DESIGN SPECIAL DESIGN SHEET (ENGLISH) (REV. 09-01-10)

ORIGINAL SCALE IN INCHES FOR REDUCED PLANS 0 1 2 3

UNIT: 3619
PROJECT NUMBER & PHASE: 0400000164
CONTRACT NO.: 04-0a7901

DISREGARD PRINTS BEARING EARLIER REVISION DATES → 6-28-11 11-08-11 1-3-12 5-23-12

SHEET 8 OF 11

FILE => 04-0a7901-33-0149.dgn

USERNAME => s124496 DATE PLOTTED => 04-JUN-2012 TIME PLOTTED => 15:22

DIST	COUNTY	ROUTE	POST MILES TOTAL PROJECT	SHEET No.	TOTAL SHEETS
04	Ala,CC	4,80,84, 92,238,etc.	Var	139	141

REGISTERED CIVIL ENGINEER — DATE 2-17-12

6-4-12
PLANS APPROVAL DATE

REGISTERED PROFESSIONAL ENGINEER GENARO M. DORIA No. C63583 Exp. 9/30/12 CIVIL STATE OF CALIFORNIA

The State of California or its officers or agents shall not be responsible for the accuracy or completeness of electronic copies of this plan sheet.

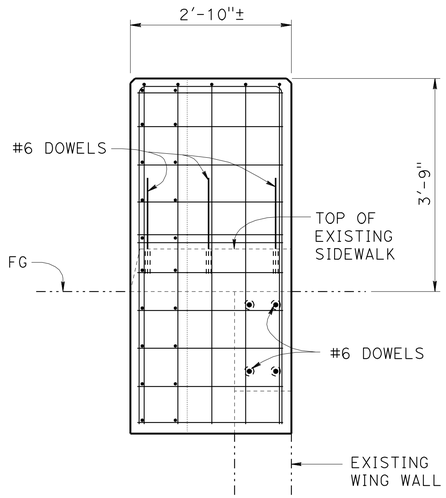

SECTION A-A
3/4" = 1'-0"

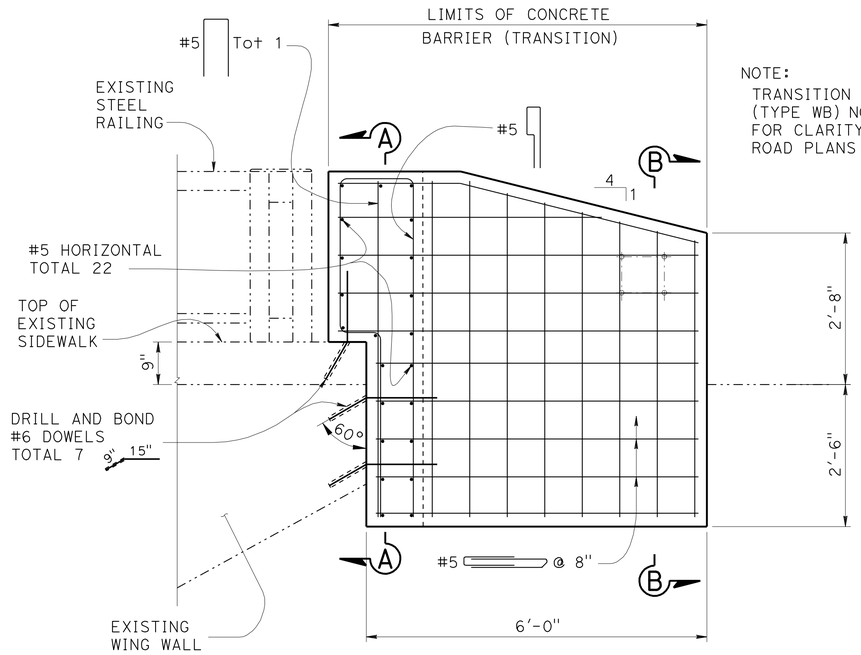

NOTE:
TRANSITION RAILING (TYPE WB) NOT SHOWN FOR CLARITY. SEE ROAD PLANS AND A77-J4

ELEVATION
3/4" = 1'-0"

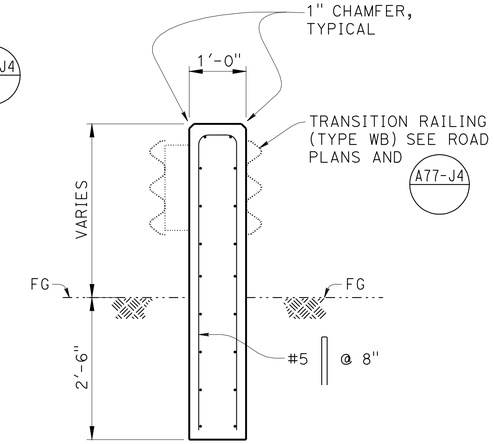

SECTION B-B
3/4" = 1'-0"

LEGEND

Indicates existing structure

Indicates new construction

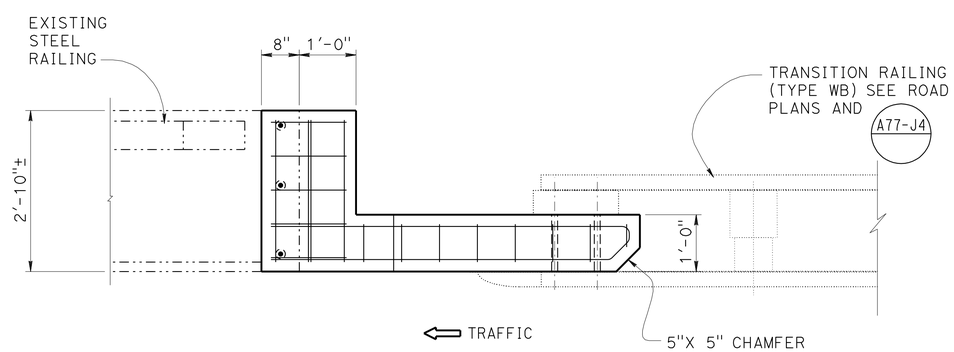

PLAN
3/4" = 1'-0"

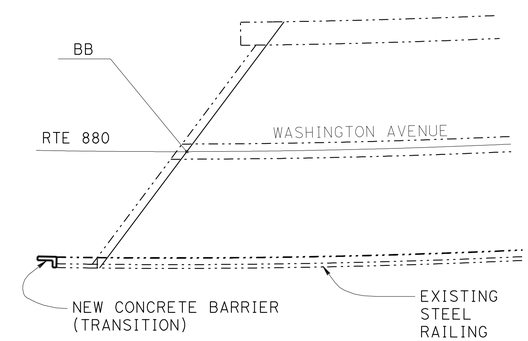

LOCATION PLAN
3/4" = 1'-0"

NOTES:

1. Minimum 1" cover, typical.
2. Patch any existing bolt holes from MBGR with cement mortar.
3. See "ROAD PLANS" for exact location.
4. This is Project Location 149.
5. All reinforcing to be galvanized.

THE CONTRACTOR SHALL VERIFY ALL CONTROLLING FIELD DIMENSIONS BEFORE ORDERING OR FABRICATING ANY MATERIAL.

	BY	CHECKED
DESIGN	G DORIA	Y SONG
DETAILS	P WELLS	G DORIA
QUANTITIES	G DORIA	Y SONG

STATE OF CALIFORNIA
DEPARTMENT OF TRANSPORTATION

DIVISION OF ENGINEERING SERVICES
STRUCTURE DESIGN
SPECIAL DESIGN BRANCH

BRIDGE NO. 33-0166
POST MILE 20.82

WASHINGTON AVE BRIDGE CONCRETE BARRIER (TRANSITION)
LOCATION PLAN & MISCELLANEOUS DETAILS

STRUCTURES DESIGN SPECIAL DESIGN SHEET (ENGLISH) (REV. 09-01-10)

ORIGINAL SCALE IN INCHES FOR REDUCED PLANS 0 1 2 3

UNIT: 3619
PROJECT NUMBER & PHASE: 0400000164
CONTRACT NO.: 04-0A7901

DISREGARD PRINTS BEARING EARLIER REVISION DATES

REVISION DATES 11-02-11 1-3-12 5-23-12

SHEET 9 OF 11

FILE => spec_des-br-proj/misc/paul/hold 04-0a7901-33-0166.dgn

USERNAME => s124496 DATE PLOTTED => 04-JUN-2012 TIME PLOTTED => 15:22

DIST	COUNTY	ROUTE	POST MILES TOTAL PROJECT	SHEET No.	TOTAL SHEETS
04	Ala,CC	4,80,84, 92,238,etc.	Var	140	141

REGISTERED CIVIL ENGINEER — DATE 2-17-12

6-4-12
PLANS APPROVAL DATE

REGISTERED PROFESSIONAL ENGINEER GENARO M. DORIA No. C63583 Exp. 9/30/12 CIVIL STATE OF CALIFORNIA

The State of California or its officers or agents shall not be responsible for the accuracy or completeness of electronic copies of this plan sheet.

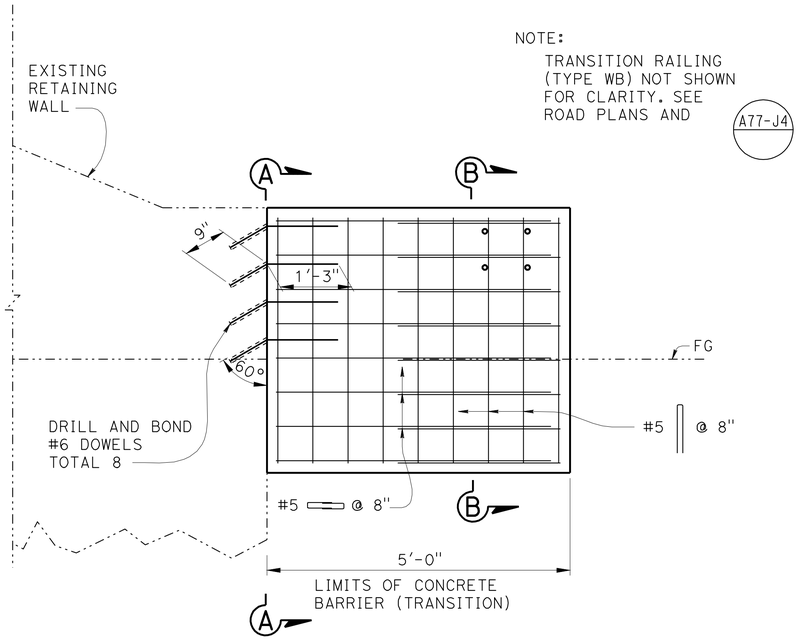

ELEVATION
3/8" = 1'-0"

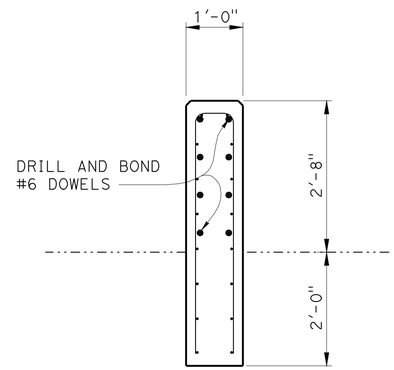

SECTION A-A
1/2" = 1'-0"

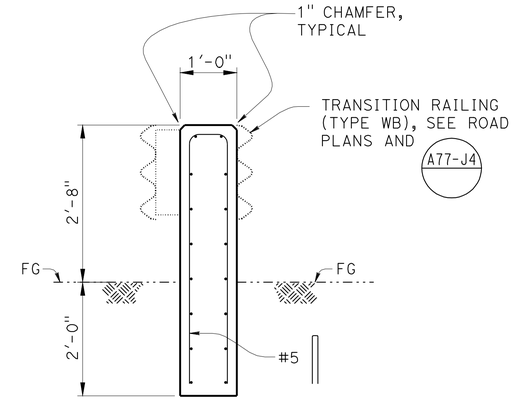

SECTION B-B
1/2" = 1'-0"

LEGEND

Indicates existing structure

Indicates new construction

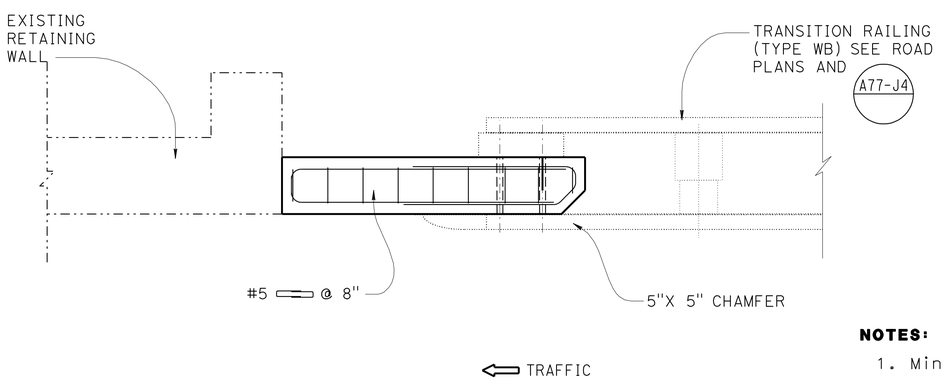

PLAN
3/8" = 1'-0"

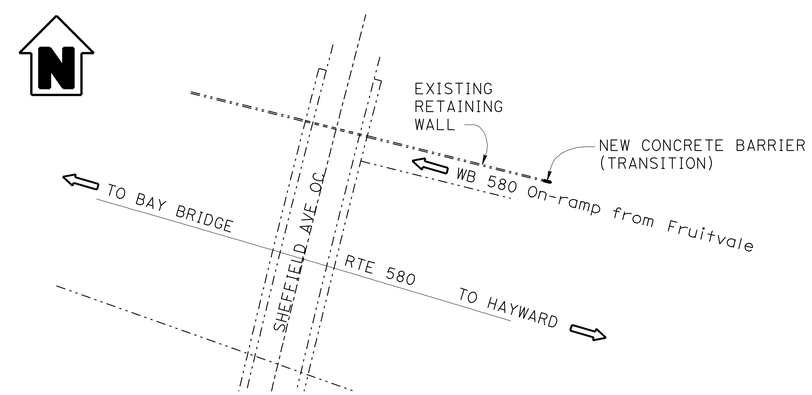

LOCATION PLAN
NO SCALE

NOTES:

1. Minimum 1" cover, typical.
2. Patch any existing bolt holes from MBGR with cement mortar.
3. See "ROAD PLANS" for exact location.
4. This is Project Location 76
5. All reinforcing to be galvanized.

THE CONTRACTOR SHALL VERIFY ALL CONTROLLING FIELD DIMENSIONS BEFORE ORDERING OR FABRICATING ANY MATERIAL.

	BY	CHECKED
DESIGN	Y SONG	G DORIA
DETAILS	P C WELLS	Y SONG
QUANTITIES	Y SONG	G DORIA

STATE OF CALIFORNIA
DEPARTMENT OF TRANSPORTATION

DIVISION OF ENGINEERING SERVICES
STRUCTURE DESIGN
SPECIAL DESIGN BRANCH

BRIDGE NO. 33-0325
POST MILE R41.73

SHEFFIELD AVENUE OC CONCRETE BARRIER (TRANSITION)
MISCELLANEOUS DETAILS

STRUCTURES DESIGN SPECIAL DESIGN SHEET (ENGLISH) (REV. 09-01-10)

ORIGINAL SCALE IN INCHES FOR REDUCED PLANS 0 1 2 3

UNIT: 3619
PROJECT NUMBER & PHASE: 0400000164
CONTRACT NO.: 04-0a7901

DISREGARD PRINTS BEARING EARLIER REVISION DATES

REVISION DATES: 6-28-11 11-04-11 1-5-12 5-23-12

SHEET 10 OF 11

FILE => 04-0a7901-33-0325.dgn

USERNAME => s124496 DATE PLOTTED => 04-JUN-2012 TIME PLOTTED => 15:23

DIST	COUNTY	ROUTE	POST MILES TOTAL PROJECT	SHEET No.	TOTAL SHEETS
04	Ala,CC	4,80,84, 92,238,etc.	Var	141	141

REGISTERED CIVIL ENGINEER — DATE 2-17-12

6-4-12
PLANS APPROVAL DATE

The State of California or its officers or agents shall not be responsible for the accuracy or completeness of electronic copies of this plan sheet.

REGISTERED PROFESSIONAL ENGINEER GENARO M. DORIA No. C63583 Exp. 9/30/12 CIVIL STATE OF CALIFORNIA

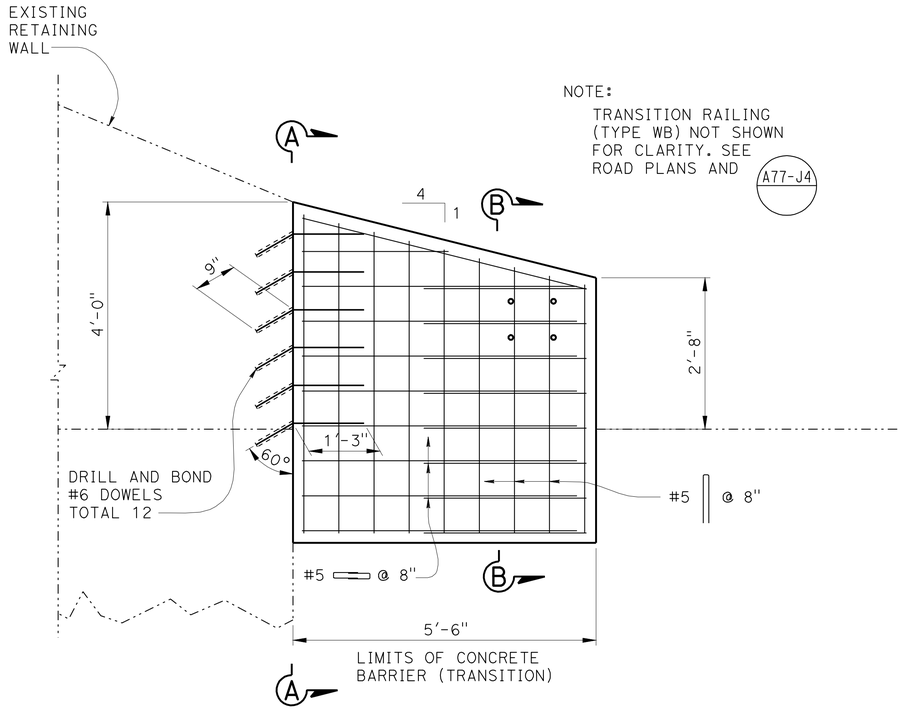

ELEVATION
3/8" = 1'-0"

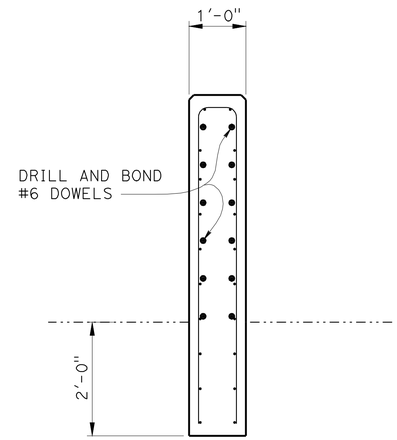

SECTION A-A
1/2" = 1'-0"

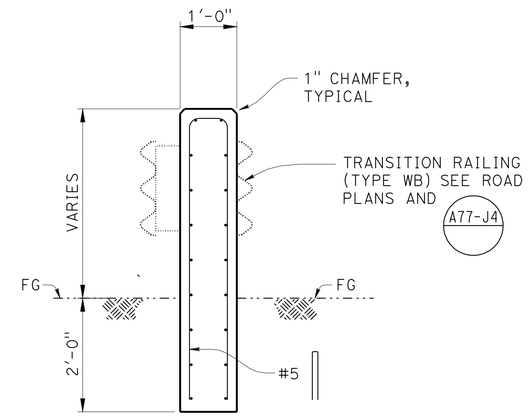

SECTION B-B
1/2" = 1'-0"

LEGEND

-·-·-·- Indicates existing structure

——— Indicates new construction

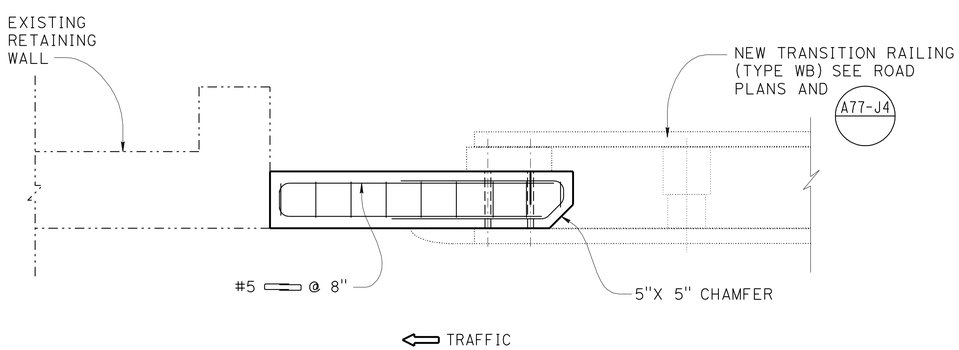

PLAN
3/8" = 1'-0"

NOTES:

1. Minimum 1" cover, typical.
2. See INDEX sheet and SITE PLAN sheet for PLAN Type.
3. Patch any existing bolt holes from MBGR with cement mortar.
4. See "ROAD PLANS" for exact location.
5. All reinforcing to be galvanized.

CONCRETE BARRIER TRANSTION LOCATION TABLE

Location No.	Street Name	Route	Post Mile	Direction	No. of "WB" connections @ Approach End	No. of "WB" connections @ Departure End	CONCRETE BARRIER (TRANSITION) (LF)
71	EB 580 on-ramp from Keller Avenue	580	R37.62	EB	1		5.5
				WB			

THE CONTRACTOR SHALL VERIFY ALL CONTROLLING FIELD DIMENSIONS BEFORE ORDERING OR FABRICATING ANY MATERIAL.

	BY	CHECKED
DESIGN	Y SONG	G DORIA
DETAILS	P C WELLS	Y SONG
QUANTITIES	Y SONG	G DORIA

STATE OF CALIFORNIA
DEPARTMENT OF TRANSPORTATION

DIVISION OF ENGINEERING SERVICES
STRUCTURE DESIGN
SPECIAL DESIGN BRANCH

BRIDGE NO. N/A
POST MILE R37.62

KELLER AVENUE CONCRETE BARRIER (TRANSITION)
MISCELLANEOUS DETAILS

STRUCTURES DESIGN SPECIAL DESIGN SHEET (ENGLISH) (REV. 09-01-10)

ORIGINAL SCALE IN INCHES FOR REDUCED PLANS 0 1 2 3

UNIT: 3619
PROJECT NUMBER & PHASE: 0400000164
CONTRACT NO.: 04-0A7901

DISREGARD PRINTS BEARING EARLIER REVISION DATES

REVISION DATES 6-28-11 11-04-11 1-25-12 5-23-12

SHEET 11 OF 11

FILE => 04-0a7901-r37-62.dgn

USERNAME => s124496 DATE PLOTTED => 04-JUN-2012 TIME PLOTTED => 15:23