Dist	COUNTY	ROUTE	KILOMETER POST TOTAL PROJECT	SHEET No.	TOTAL SHEETS
04	SF	80	12.7/13.2	18	806

REGISTERED CIVIL ENGINEER 3-05-08 DATE

6-23-08
PLANS APPROVAL DATE

REGISTERED PROFESSIONAL ENGINEER T.T. Lai No. 63630 Exp. 9-30-10 CIVIL STATE OF CALIFORNIA

THE STATE OF CALIFORNIA OR ITS OFFICERS OR AGENTS SHALL NOT BE RESPONSIBLE FOR THE ACCURACY OR COMPLETENESS OF ELECTRONIC COPIES OF THIS PLAN SHEET.

Caltrans Metric

5 8

LEGEND: (THIS SHEET ONLY)

- CONTRACT No. 04-0120S4
- CONTRACT No. 04-0120R4
- CONTRACT No. 04-0120F4
- CONTRACT OVERLAP PR
- CONTRACT OVERLAP FP
- CONTRACT OVERLAP PRA

NOTE:

SEE "MAINTAINING TRAFFIC" OF SPECIAL PROVISIONS FOR OTHER RESTRICTIONS.

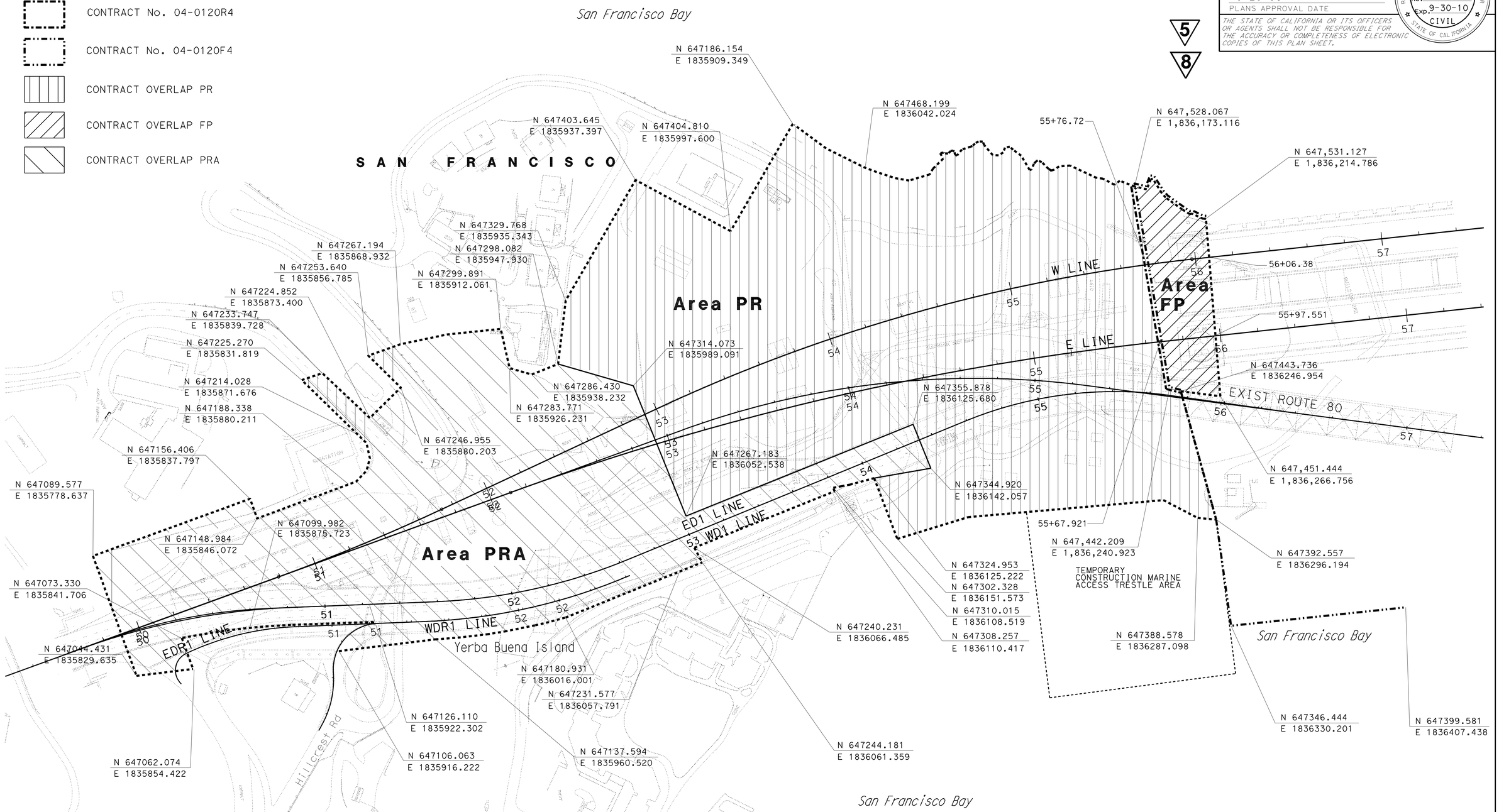

5 REVISED PER ADDENDUM No. 5 DATED JULY 30, 2009

8 REVISED PER ADDENDUM No. 8 DATED NOVEMBER 12, 2009

CONSTRUCTION DETAILS AREAS FOR CONTRACTOR USE

SCALE: 1:1000

C-6

STATE OF CALIFORNIA - DEPARTMENT OF TRANSPORTATION
Caltrans DESIGN

FUNCTIONAL SUPERVISOR: BOB ZANDIPOUR
CALCULATED-DESIGNED BY: TRINH LAI
CHECKED BY: BOB ZANDIPOUR
REVISED BY: TL
DATE REVISED: 10/07

LAST REVISION 05-20-08
DATE PLOTTED => 09-NOV-2009
TIME PLOTTED => 13:03

Dist	COUNTY	ROUTE	KILOMETER POST TOTAL PROJECT	SHEET No.	TOTAL SHEETS
04	SF	80	12.7/13.2	184	806

REGISTERED ELECTRICAL ENGINEER 2/14/08

6-23-08
PLANS APPROVAL DATE

REGISTERED PROFESSIONAL ENGINEER FADI WALIEDDINE No. 11465 Exp. 12/31/09 ELECTRICAL STATE OF CALIFORNIA

THE STATE OF CALIFORNIA OR ITS OFFICERS OR AGENTS SHALL NOT BE RESPONSIBLE FOR THE ACCURACY OR COMPLETENESS OF ELECTRONIC COPIES OF THIS PLAN SHEET.

PB AMERICAS, Inc.
A Parsons Brinckerhoff Company
303 Second St., Suite 700N
San Francisco, CA 94107-1317

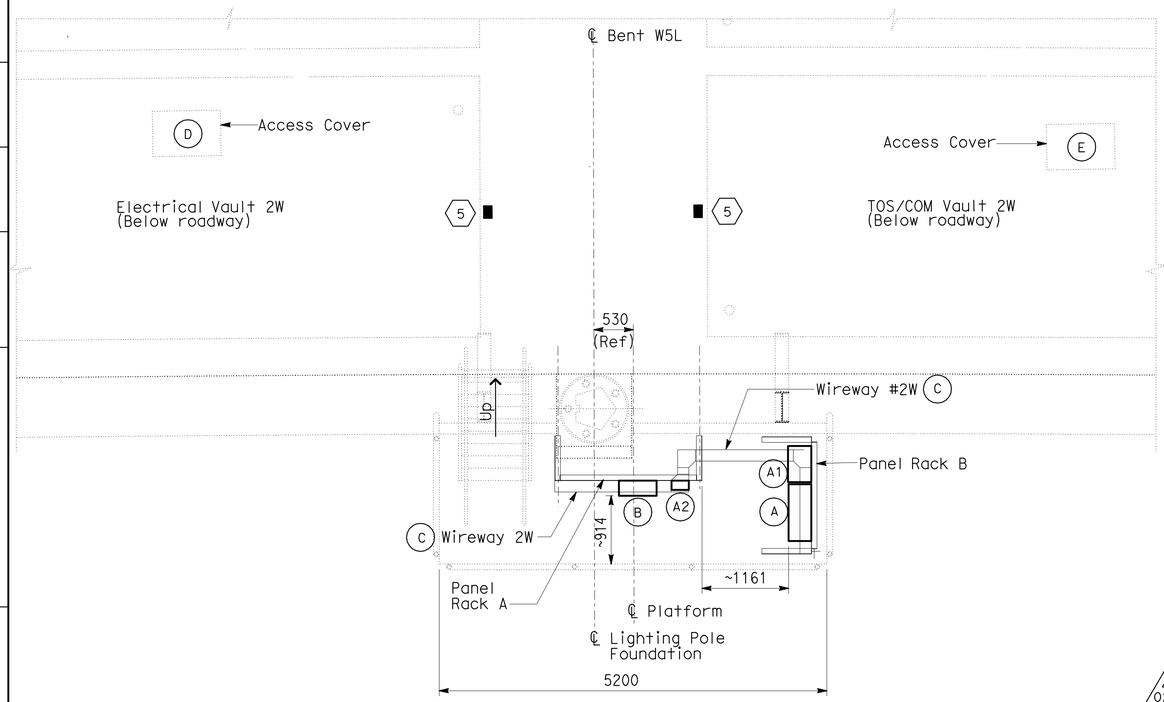

SERVICE PLATFORM #2W EQUIPMENT ARRANGEMENT PLAN (2)

SCALE: 1:40

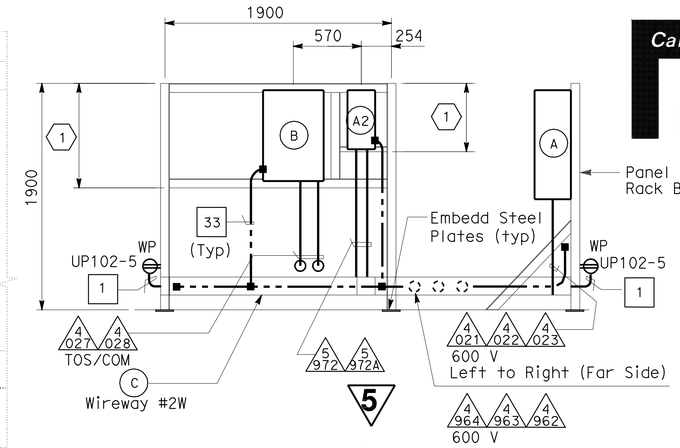

PANEL RACK A

SCALE: 1:25

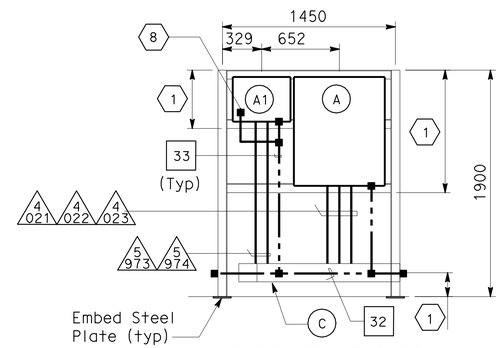

PANEL RACK B

SCALE: 1:25

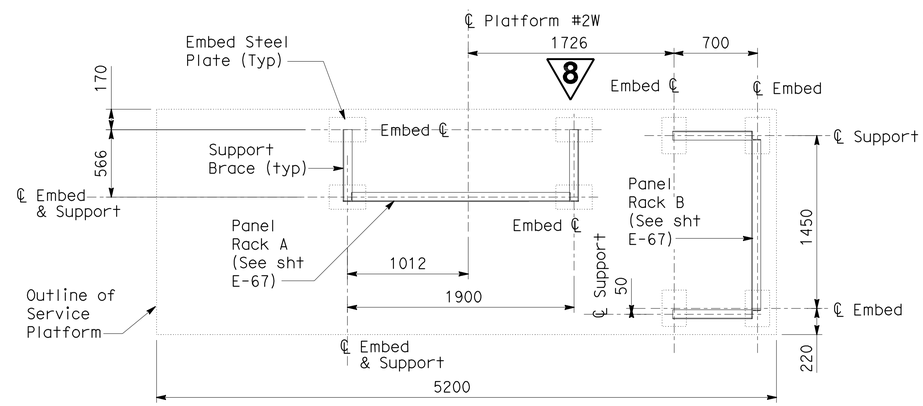

SUPPORT LOCATION - PLAN

SCALE: 1:25

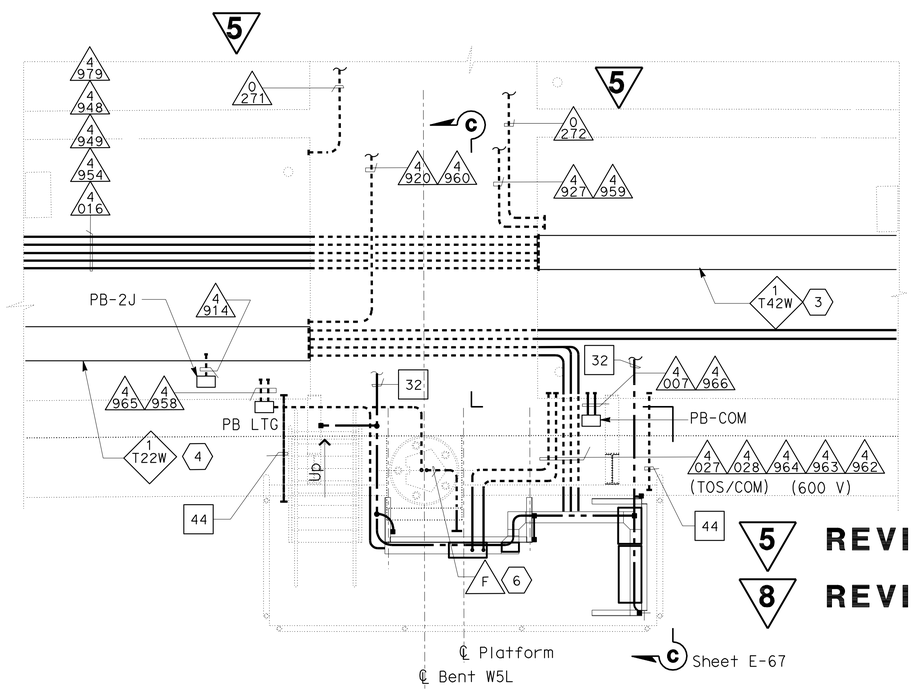

(7) CONDUIT AND GROUNDING PLAN - WB

SCALE: 1:40

SHEET NOTES:

(1) The Contractor to locate to suit site conditions.

(2) Equipment dimensions and sizes shown shall be verified by the Contractor prior to installation.

(3) Install 610 mm solid bottom tray with cover for routing TOS/COM cables.

(4) Install 610 mm ladder type tray for routing 600 V rated cable.

(5) Install pull irons in all vaults, cast in each end wall.

(6) Install 41 mm (F) conduit from Platform 2W to pole 1023-1. For future CCTV (C#15).

(7) For conduit routing in electrical vault and TOS/COM vault, see sheet E-82.

(8) Connect to transformer neutral. See panel schedule.

NOTES:

1. For pull box schedule, refer to sheet E-69.
2. Conduit openings and locations through diaphragm, refer to structures sheets.
3. For details of embedd steel plates, refer to AS sheets.
4. Ground conductor routed outside or exposed shall be green insulated.
5. Conduits terminating inside vaults shall be provided with ground insulated bushing connected to ground bar.

EQUIPMENT SCHEDULE: (2)

(A) Utility Panel UP-102
208/120 V, 3 Phase, 4 Wires (PB-8A).

(A1) 15 kVA Transformer, 3 Phase, 4 Wires
480 V-208/120 V, 60 Hz. (Nema 4X)
Size: 375 H x 485 W x 311 D.

(A2) Enclosed molded case circuit breaker
(for UP-102) Size: 495 H x 485 W x 311 D.

(B) Telephone Terminal Box #TEL-02W (PB-7C).

(C) 600 V Wireway #1W, (Nema 4X) 152 H x 152 W.

MISCELLANEOUS

(D) Deck utility access opening and cover.
Engraving "ELECTRICAL VAULT 2W".
Refer to Structures plan sheets,
miscellaneous supersructure details
No. 2.

(E) Deck utility access opening and cover.
Engraving "TOS/COM 2W". Refer to
Structures plan sheet, miscellaneous
superstructure details No. 2.

(5) REVISED PER ADDENDUM No. 5 DATED JULY 30, 2009

(8) REVISED PER ADDENDUM No. 8 DATED NOVEMBER 12, 2009

DETAILS

YBI TRANSITION STRUCTURES ROADWAY WESTBOUND (PLATFORM 2W ARRANGEMENT AND PLAN)

SCALE AS NOTED

E-65

THIS PLAN IS ACCURATE FOR ELECTRICAL WORK ONLY.

ALL DIMENSIONS ARE IN MILLIMETERS UNLESS OTHERWISE SHOWN

REVISED BY	DATE REVISED
FK	AB

CALCULATED-DESIGNED BY / CHECKED BY

SUPERVISOR: BEHZAD GOLEMOHAMMADI

CONSULTANT FUNCTIONAL SUPERVISOR

STATE OF CALIFORNIA - DEPARTMENT OF TRANSPORTATION

Caltrans

LAST REVISION 00-00-00 DATE PLOTTED => 09-NOV-2009 TIME PLOTTED => 13:03

Dist	COUNTY	ROUTE	KILOMETER POST TOTAL PROJECT	SHEET No.	TOTAL SHEETS
04	SF	80	12.7/13.2	193	806

REGISTERED ELECTRICAL ENGINEER 2/14/08

6-23-08
PLANS APPROVAL DATE

REGISTERED PROFESSIONAL ENGINEER FADI WALIEDDINE No. 11465 Exp. 12/31/09 ELECTRICAL STATE OF CALIFORNIA

THE STATE OF CALIFORNIA OR ITS OFFICERS OR AGENTS SHALL NOT BE RESPONSIBLE FOR THE ACCURACY OR COMPLETENESS OF ELECTRONIC COPIES OF THIS PLAN SHEET.

PB AMERICAS, Inc.
A Parsons Brinckerhoff Company
303 Second St., Suite 700N
San Francisco, CA 94107-1317

Caltrans Metric

5

NOTES:

1. References:
   - For pull box mounting details, see sheet E-86.
   - For conduit support locations, see sheets E-87 through E-89.
   - For pull box schedules, see sheet E-69.
   - TOS equipment it shown for conduit routing only. For typical details of TOS controllers and devices, see sheets E-146 through E-157.
   - For lighting circuit and wiring diagram, see sheet E-57.
   - For light pipe schedule, see sheet E-84.
   - For 480 V light pipe wiring diagram, see sheet E-77 & E-77A.
2. For fixture schedule, see sheet E-110.
3. For other related work not shown, see Electrical Special Provisions.

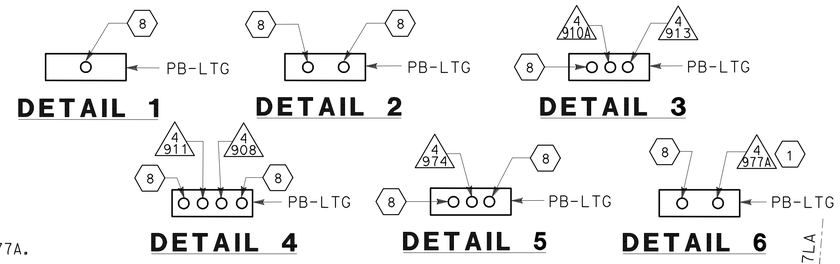

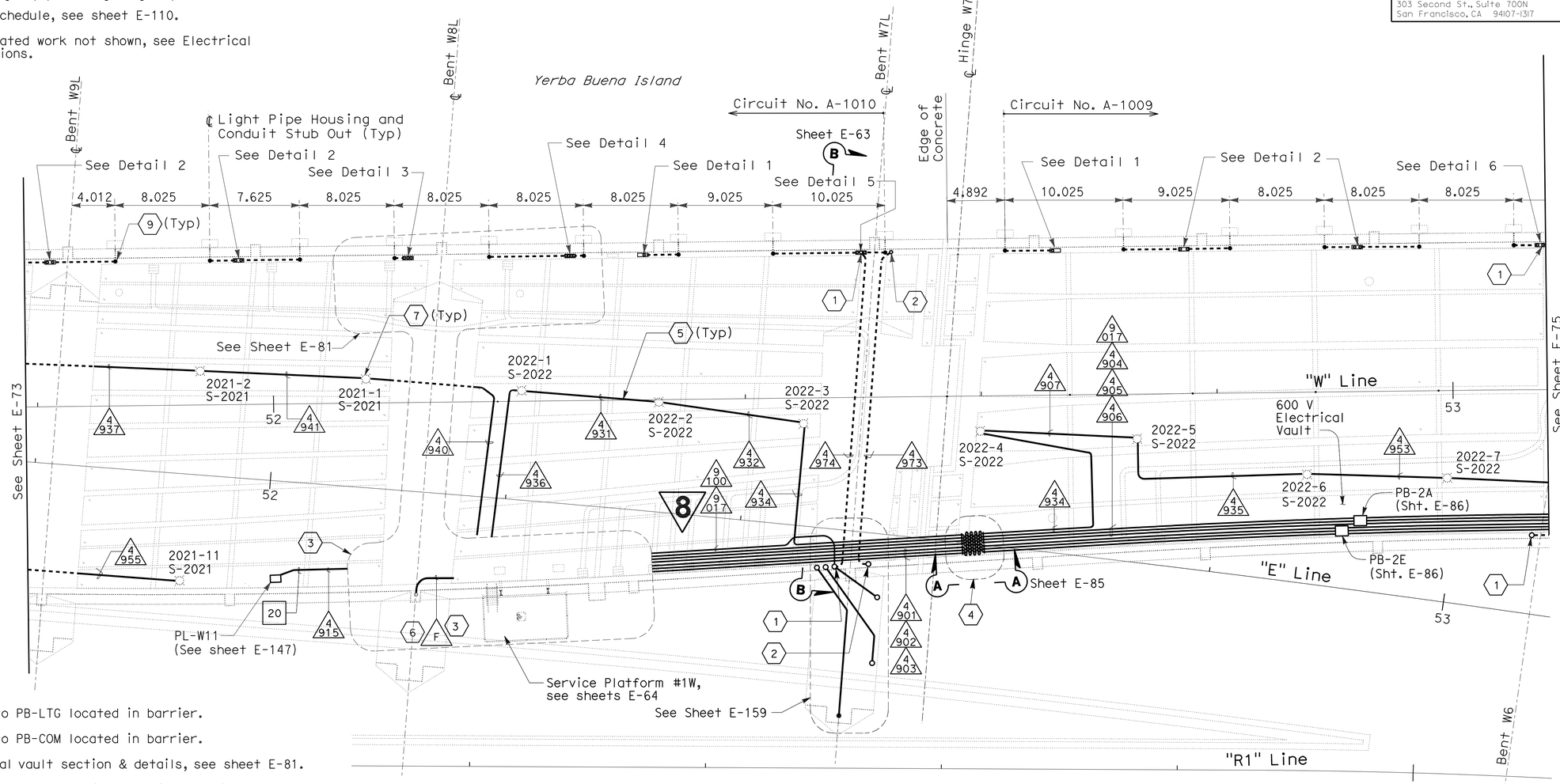

CONDUIT PLAN

SHEET NOTES:

1. Conduit up to PB-LTG located in barrier.
2. Conduit up to PB-COM located in barrier.
3. For electrical vault section & details, see sheet E-81.
4. Deck access manhole required for installation of cable.
5. Support and install lighting conduit flush on girder floor.
6. Install 41 mm (F) conduit from 600 V vault in IW to Pole 1022-1. Required for future camera #14 (By others).
7. For soffit light fixture and No. 7 ceiling pull box mounting, see Caltrans Standard ES-9E, Detail F.
8. Conduit up to barrier PB-LTG for future light pipe. Provide cap at bottom end of conduit. See Section C-C sheet E-63.
9. Provide cap at bottom end of conduit. See Section C-C sheet E-63.

5 REVISED PER ADDENDUM No. 5 DATED JULY 30, 2009

8 REVISED PER ADDENDUM No. 8 DATED NOVEMBER 12, 2009

YBI TRANSITION STRUCTURES GIRDER WESTBOUND
(LIGHTING AND ELECTRICAL SYSTEMS)

SCALE: 1:200

THIS PLAN IS ACCURATE FOR ELECTRICAL WORK ONLY.

ALL DIMENSIONS ARE IN METERS UNLESS OTHERWISE SHOWN

E-74

STATE OF CALIFORNIA - DEPARTMENT OF TRANSPORTATION

Caltrans

CONSULTANT FUNCTIONAL SUPERVISOR: BEHZAD GOLEMOHAMMADI

CALCULATED-DESIGNED BY: FK

CHECKED BY: AB

REVISED BY / DATE REVISED

LAST REVISION 00-00-00 DATE PLOTTED => 09-NOV-2009 TIME PLOTTED => 13:04

Dist	COUNTY	ROUTE	KILOMETER POST TOTAL PROJECT	SHEET No.	TOTAL SHEETS
04	SF	80	12.7/13.2	194	806

REGISTERED ELECTRICAL ENGINEER 2/14/08

6-23-08
PLANS APPROVAL DATE

REGISTERED PROFESSIONAL ENGINEER FADI WALIEDDINE No. 11465 Exp. 12/31/09 ELECTRICAL STATE OF CALIFORNIA

THE STATE OF CALIFORNIA OR ITS OFFICERS OR AGENTS SHALL NOT BE RESPONSIBLE FOR THE ACCURACY OR COMPLETENESS OF ELECTRONIC COPIES OF THIS PLAN SHEET.

PB AMERICAS, Inc.
A Parsons Brinckerhoff Company
303 Second St., Suite 700N
San Francisco, CA 94107-1317

Caltrans Metric

5

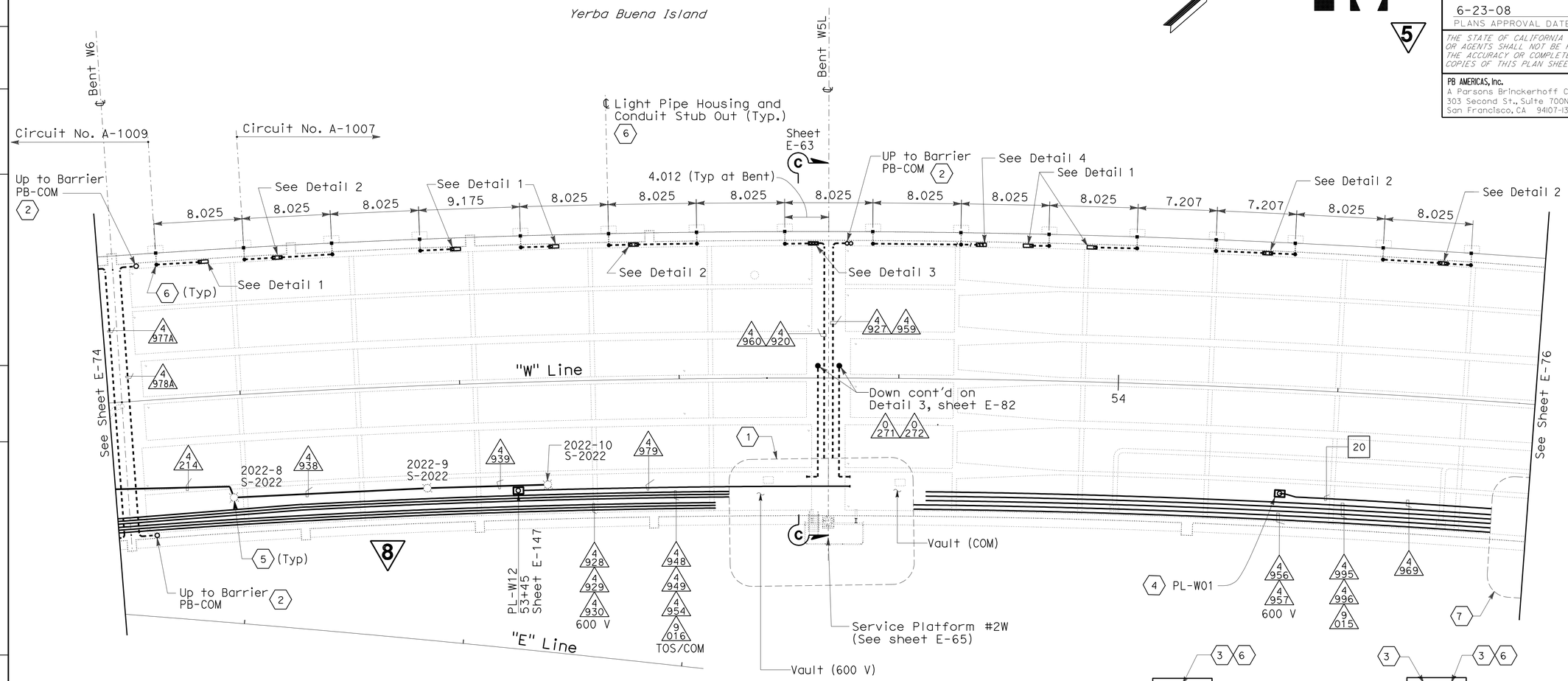

CONDUIT PLAN

DETAIL 1

DETAIL 2

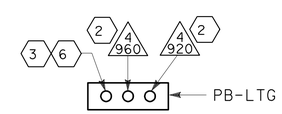

DETAIL 3

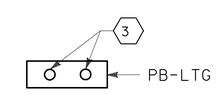

DETAIL 4

5 REVISED PER ADDENDUM No. 5 DATED JULY 30, 2009

8 REVISED PER ADDENDUM No. 8 DATED NOVEMBER 12, 2009

SHEET NOTES:

1. For vault section & details, see sheet E-82.
2. Conduit up Barrier PB-LTG and PB-COM.
3. Conduit up to barrier PB-LTG for future light pipe. Provide cap at bottom end of conduit, see Section C-C sheet E-63.
4. For traffic operations system preformed loop detector station installation, see sheet E-147.
5. For soffit light fixture and No. 7 ceiling pull box mounting, see Caltrans Standard ES-9E, Detail F.
6. Provide cap at bottom end of conduit, see Section C-C, sheet E-63.
7. For electrical vault section & details see sheet E-83.

THIS PLAN IS ACCURATE FOR ELECTRICAL WORK ONLY.

NOTES:

1. References:
   - For lighting poles, call boxes, outlet boxes and pull boxes schedules, see sheet E-69.
   - Lighting fixture mounted under westbound deck. Conduits routed inside girder box.
   - For service platform plan and details, see sheet E-65.
   - For future light pipe schedule, see sheet E-84.
   - For 480 light pipe wiring diagram, see sheet E-77.
   - For typical detail of conduit & pull box support, see sheet E-86.
2. For fixture schedule, see sheet E-110.

ALL DIMENSIONS ARE IN METERS UNLESS OTHERWISE SHOWN

YBI TRANSITION STRUCTURES GIRDER WESTBOUND
(LIGHTING AND ELECTRICAL SYSTEMS)

SCALE: 1:200

E-75

REVISED BY	DATE REVISED

CALCULATED-DESIGNED BY	CHECKED BY
FK	AB

CONSULTANT FUNCTIONAL SUPERVISOR: BEHZAD GOLEMOHAMMADI

STATE OF CALIFORNIA - DEPARTMENT OF TRANSPORTATION

Caltrans

LAST REVISION 00-00-00 | DATE PLOTTED => 09-NOV-2009 | TIME PLOTTED => 13:04

Dist	COUNTY	ROUTE	KILOMETER POST TOTAL PROJECT	SHEET No.	TOTAL SHEETS
04	SF	80	12.7/13.2	229	806

REGISTERED ELECTRICAL ENGINEER 2/14/08

6-23-08
PLANS APPROVAL DATE

REGISTERED PROFESSIONAL ENGINEER FADI WALIEDDINE No. 11465 Exp. 12/31/09 ELECTRICAL STATE OF CALIFORNIA

THE STATE OF CALIFORNIA OR ITS OFFICERS OR AGENTS SHALL NOT BE RESPONSIBLE FOR THE ACCURACY OR COMPLETENESS OF ELECTRONIC COPIES OF THIS PLAN SHEET.

PB AMERICAS, Inc.
A Parsons Brinckerhoff Company
303 Second St., Suite 700N
San Francisco, CA 94107-1317

ROADWAY LIGHTING POLE AND FIXTURE SCHEDULE (2)

Circuit Number	Pole Number	Location: Station	Location: Roadway side	Mounting Height (M)	Ltg. Fixture Type	Number/ Wattage	Remarks (Mounting Provisions)
S-2023	2023-1	53+75.8	North	7	YSR-3A-P	1-250 W	Pole mounted
S-2023	2023-2	53+89.2	North	7	YSR-3A-P	1-250 W	Pole mounted
S-2023	2023-3	54+02.5	North	12	YSR-2B-L	2-400 W	Pole mounted
					YSR-3-L	1-250 W	
A-2005					YAM	160 W	
S-2023	2023-4	54+38	North	15	YSR-2B-L	2-400 W	Pole mounted
					YSR-3-L	1-250 W	
A-2005					YAM	160 W	
S-2024	2024-1	54+79.3	North	15	YSR-2B-L	2-400 W	Pole mounted
					YSR-3-L	1-250 W	
A-2005					YAM	160 W	
S-2024	2024-2	55+20.5	North	17.5	YSR-2B-L	2-400 W	Pole mounted
					YSR-3-L	1-250 W	
A-2005					YAM	160 W	
S-2024	2024-3	55+56	North	17.5	YSR-2B-L	2-400 W	Pole mounted
					YSR-3-L	1-250 W	
A-2005					YAM	160 W	
S-2041	2041-1	51+89.3	South	7	YSR-3A-P	1-250 W	Pole mounted
S-2041	2041-2	52+05.1	South	7	YSR-3A-P	1-250 W	Pole mounted
S-2041	2041-3	52+21.0	South	7	YSR-3A-P	1-250 W	Pole mounted
S-2041	2041-4	52+36.7	South	7	YSR-3A-P	1-250 W	Pole mounted
S-2041	2041-5	52+52.6	South	7	YSR-3A-P	1-250 W	Pole mounted
S-2041	2041-6	52+66.2	South	7	YSR-3A-P	1-250 W	Pole mounted
S-2041	2041-7	52+79.8	South	7	YSR-3A-P	1-250 W	Pole mounted
S-2041	2041-8	53+02.9	South	7	YSR-3A-P	1-250 W	Pole mounted
S-2041	2041-9	53+17.7	South	7	YSR-3A-P	1-250 W	Pole mounted
S-2041	2041-10	53+33.8	South	7	YSR-3A-P	1-250 W	Pole mounted
S-2041	2041-11	53+50.0	South	7	YSR-3A-P	1-250 W	Pole mounted
S-2041	2041-12	53+66.1	South	7	YSR-3A-P	1-250 W	Pole mounted
S-2041	2041-13	53+82.3	South	7	YSR-3A-P	1-250 W	Pole mounted

BIKE PATH FIXTURE SCHEDULE

Location	Mounting	Lighting Fixture Type	Number/ Wattage	Remarks
Bike Path Structure	Bike Path Railing	YSB	1-40 W	Compact Fluorescent

ROADWAY SOFFIT LIGHTING FIXTURE SCHEDULE (1)

8

Circuit Number	Ltg. Fixture Number	Location: Station	Location: Roadway side	Ltg. Fixture Type	Number/ Wattage	Remarks (Mounting Provisions)
S-2021	2021-1	52+08	North	YSR-3A-S	1-200 W	WB Soffit Mounted
S-2021	2021-2	51+94	North	YSR-3A-S	1-200 W	WB Soffit Mounted
S-2021	2021-3	51+75	North	YSR-3A-S	1-200 W	WB Soffit Mounted
S-2021	2021-4	51+63	North	YSR-3A-S	1-200 W	WB Soffit Mounted
S-2021	2021-5	51+49	North	YSR-3A-S	1-200 W	WB Soffit Mounted
S-2021	2021-6	51+37	North	YSR-3A-S	1-200 W	WB Soffit Mounted
S-2021	2021-7	51+37	South	YSR-3A-S	1-200 W	WB Soffit Mounted
S-2021	2021-8	51+51	South	YSR-3A-S	1-200 W	WB Soffit Mounted
S-2021	2021-9	51+62	South	YSR-3A-S	1-200 W	WB Soffit Mounted
S-2021	2021-10	51+77	South	YSR-3A-S	1-200 W	WB Soffit Mounted
S-2021	2021-11	51+94	South	YSR-3A-S	1-200 W	WB Soffit Mounted
S-2022	2022-1	52+20	North	YSR-3A-S	1-200 W	WB Soffit Mounted
S-2022	2022-2	52+32	North	YSR-3A-S	1-200 W	WB Soffit Mounted
S-2022	2022-3	52+45	North	YSR-3A-S	1-200 W	WB Soffit Mounted
S-2022	2022-4	52+60	North	YSR-3A-S	1-200 W	WB Soffit Mounted
S-2022	2022-5	52+75	North	YSR-3A-S	1-200 W	WB Soffit Mounted
S-2022	2022-6	52+90	North	YSR-3A-S	1-200 W	WB Soffit Mounted
S-2022	2022-7	52+95	South	YSR-3A-S	1-200 W	WB Soffit Mounted
S-2022	2022-8	53+18	South	YSR-3A-S	1-200 W	WB Soffit Mounted
S-2022	2022-9	53+36	South	YSR-3A-S	1-200 W	WB Soffit Mounted
S-2022	2022-10	53+48	South	YSR-3A-S	1-200 W	WB Soffit Mounted

NOTES:

1. References:
   - For roadway lighting circuit numbers, see single line diagrams sheet E-44.
   - For roadway level plans, see sheets E-90 to E-93.
2. State-furnished pole mounted lighting fixtures 12 meters and higher are provided with a lowering device.
3. State-furnished marker light type YAM is a low voltage lighting assembly. Wattages indicated are for 12 LED strips. Each LED strip is rated at 13.4 watts for a fixture total of 160.8 watts.
4. 8 For 480 V soffit light wiring diagram, refer to sheet E-57.
5. 8 For 480 V roadway lighting wiring diagram, refer to sheets E-94 and E-95.

SHEET NOTES:

(1) Lighting fixtures are located at westbound structure. See sheets E-73 to E-75. For uniformity, the fixtures shall be identical to the fixtures on the viaduct to the West of Bent 48.

(2) The Roadway Lighting Pole assembly is State-furnished.

8 **REVISED PER ADDENDUM No. 8 DATED NOVEMBER 12, 2009**

DETAILS
YBI TRANSITION STRUCTURES ROADWAY EASTBOUND (LIGHT POLE AND FIXTURE SCHEDULES)

NO SCALE

E-110

THIS PLAN ACCURATE FOR ELECTRICAL WORK ONLY.

STATE OF CALIFORNIA - DEPARTMENT OF TRANSPORTATION
Caltrans

CONSULTANT FUNCTIONAL SUPERVISOR: BEHZAD GOLEMOHAMMADI

CALCULATED-DESIGNED BY: FK
CHECKED BY: AB
REVISED BY
DATE REVISED

LAST REVISION 00-00-00
DATE PLOTTED => 09-NOV-2009
TIME PLOTTED => 13:04

DIST.	COUNTY	ROUTE	KILOMETER POST TOTAL PROJECT	SHEET NO.	TOTAL SHEETS
04	SF	80	12.7/13.2	550	806

REGISTERED ENGINEER - CIVIL

6-23-08
PLANS APPROVAL DATE

REGISTERED PROFESSIONAL ENGINEER A.L. ELY No. 18880 Exp. 6-30-11 CIVIL STATE OF CALIFORNIA

The State of California or its officers or agents shall not be responsible for the accuracy or completeness of electronic copies of this plan sheet.

T.Y. LIN / MOFFATT & NICHOL
TWO HARRISON STREET
SAN FRANCISCO, CA 94105

Caltrans Metric

5 REVISED PER ADDENDUM No. 5 DATED JULY 30, 2009

8 REVISED PER ADDENDUM No. 8 DATED NOVEMBER 12, 2009

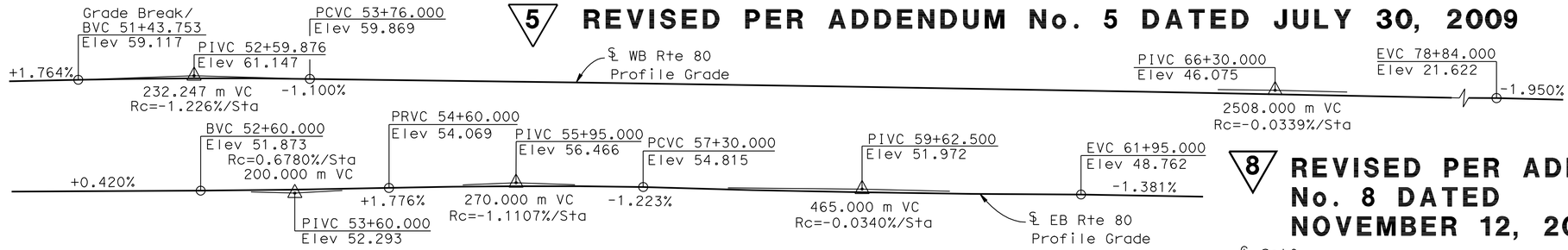

PROFILE GRADE
NO SCALE

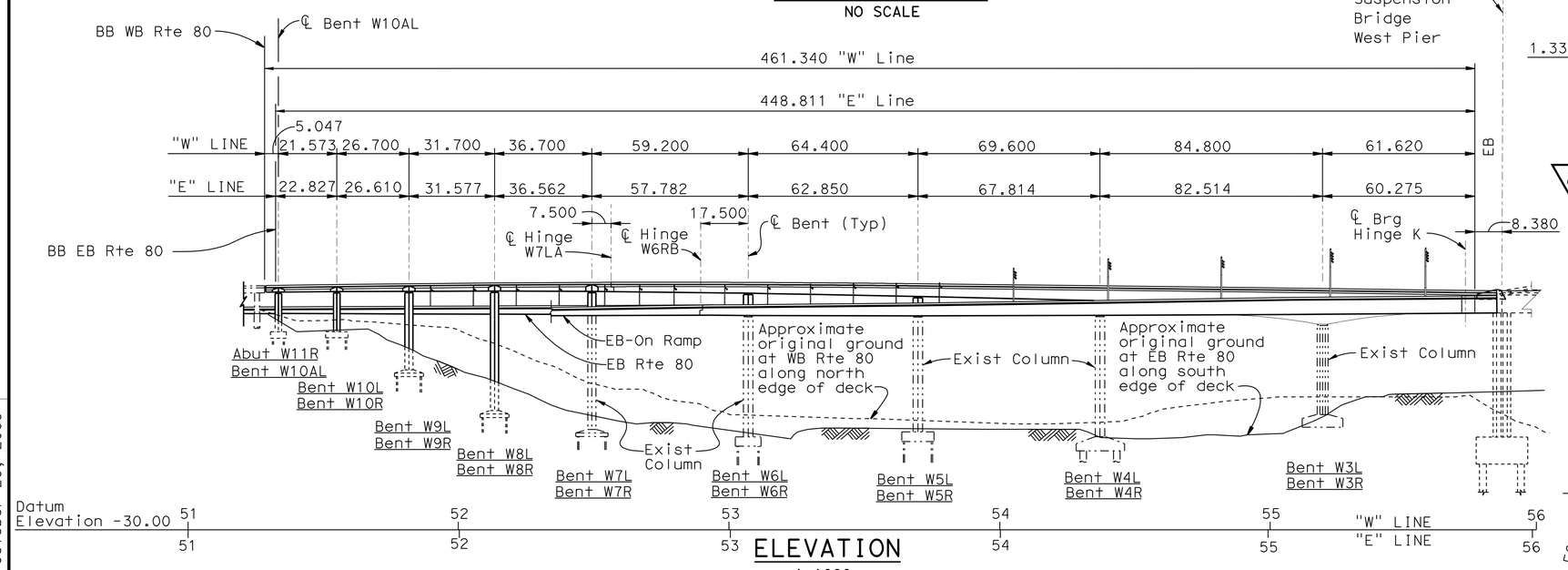

ELEVATION
1:1000

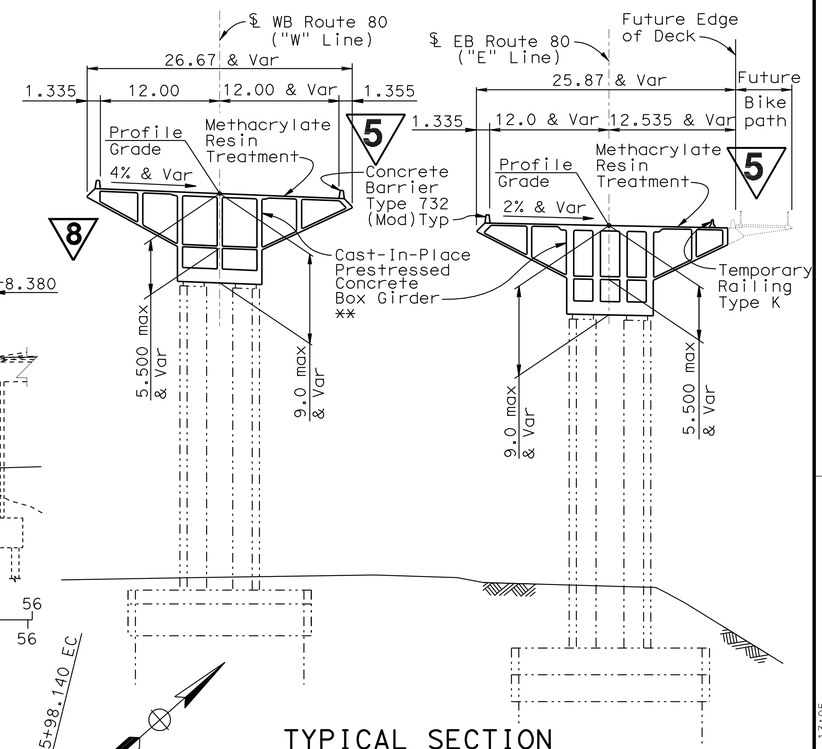

TYPICAL SECTION
(Bent W3L & W3R Shown)
1:300

** Note WB Superstructure is a Cast-in-Place conventionally reinforced concrete box girder from Bent W10AL to Hinge W7LA

Notes:
For approximate bridge quantities see "General Notes" sheet.
For pile data table see "Pile Details" sheet.

-·-·-·- Indicates existing structures.

Standard Plan Sheet No.
Detail No.

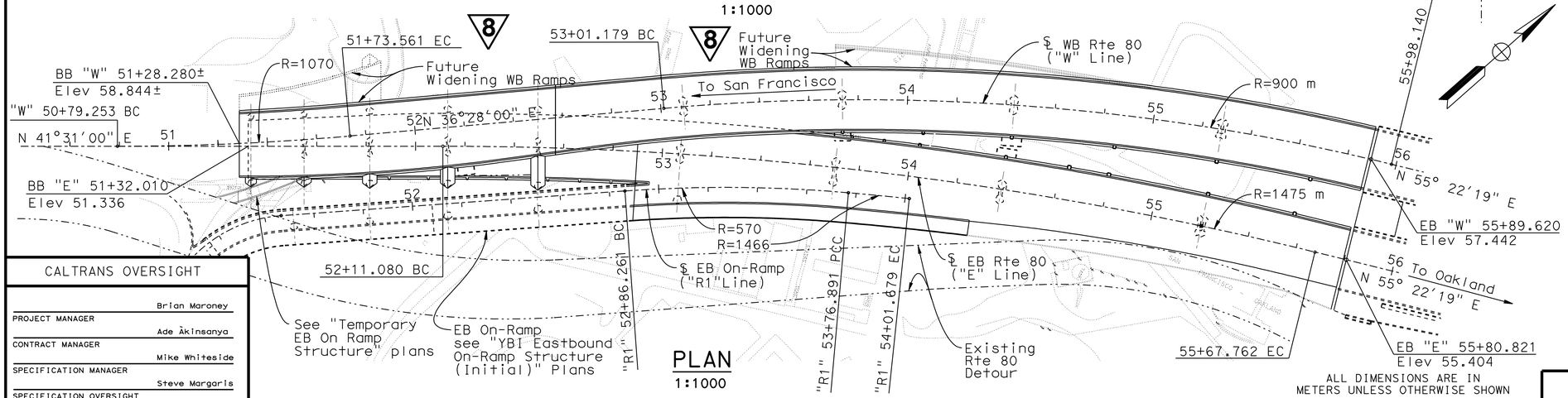

PLAN
1:1000

ALL DIMENSIONS ARE IN METERS UNLESS OTHERWISE SHOWN

CALTRANS OVERSIGHT	
PROJECT MANAGER	Brian Maroney
CONTRACT MANAGER	Ade Akinsanya
SPECIFICATION MANAGER	Mike Whiteside
SPECIFICATION OVERSIGHT	Steve Margaris
DESIGN OVERSIGHT	JOHN MOOK, BERNARD CHAN, JUAN F. CARPIO
SIGN OFF DATE	

Rev. Date: 5-18-98

	BY	CHECKED	LOAD FACTOR DESIGN	LIVE LOADING: HS20-44 AND ALTERNATIVE AND PERMIT DESIGN LOAD		
DESIGN	Desai	Jain				
DETAILS	van Ryn/Zucchi/Mai	Jain	LAYOUT	Desai	Alcaraz	
QUANTITIES	Liao	E. Nichol	SPECIFICATIONS	J.Ely	PLANS AND SPECS COMPARED Jain	

ORIGINAL SCALE IN MILLIMETERS FOR REDUCED PLANS 0 10 20 30 40 50 60 70 80 90 100

PREPARED FOR THE STATE OF CALIFORNIA DEPARTMENT OF TRANSPORTATION

Jal Birdy
PROJECT ENGINEER

CU 04251
EA 0120S1

BRIDGE NO. 34-0006 L/R
KILOMETER POST 12.8

DISREGARD PRINTS BEARING EARLIER REVISION DATES

REVISION DATES (PRELIMINARY STAGE ONLY): 9/13/07 1/31/08 3/31/08 4/3/09 6/30/09 10/28/09 7/3/06 10/4/06 1/24/07 6/25/07

SHEET 1 OF 209

SAN FRANCISCO OAKLAND BAY BRIDGE EAST SPAN SEISMIC SAFETY PROJECT

YBI TRANSITION STRUCTURES

GENERAL PLAN

FILE => 04-0120s1-34-006r1-a-gp.add

October 28, 2009

USERNAME => trmikes1 DATE PLOTTED => 09-NOV-2009 TIME PLOTTED => 13:05

INDEX TO BRIDGE PLANS

SHEET NO.	TITLE
1	GENERAL PLAN
2	INDEX TO BRIDGE PLANS
3	GENERAL NOTES
4	WESTBOUND STRUCTURE PLAN NO.1
5	WESTBOUND STRUCTURE PLAN NO.2
6	EASTBOUND STRUCTURE PLAN NO.1
7	EASTBOUND STRUCTURE PLAN NO.2
8	WESTBOUND DECK CONTOURS PLAN NO.1
9	WESTBOUND DECK CONTOURS PLAN NO.2
10	EASTBOUND DECK CONTOURS PLAN NO.1
11	EASTBOUND DECK CONTOURS PLAN NO.2
12	FOUNDATION PLAN NO.1
13	FOUNDATION PLAN NO.2
14	PILE DETAILS
15	ABUTMENT W11R DETAILS NO.1
16	ABUTMENT W11R DETAILS NO.2
17	ABUTMENT W11R DETAILS NO.3
18	BENT ELEVATIONS W10AL TO W9
19	BENT ELEVATIONS W8 TO W7
20	BENT ELEVATIONS W6 TO W5
21	BENT ELEVATIONS W4 TO W3
22	BENT W10AL DETAILS NO.1
23	BENT W10AL DETAILS NO.2
24	BENT W10AL DETAILS NO.3
25	BENT W10AL DETAILS NO.4
25A	BENT W10AL DETAILS NO.5
26	BENT W10L DETAILS NO.1
27	BENT W10L DETAILS NO.2
28	BENT W10L DETAILS NO.3
29	BENT W9L DETAILS NO.1
30	BENT W9L DETAILS NO.2
31	BENT W9L DETAILS NO.3
32	BENT W9L DETAILS NO.4
32A	BENT W9L DETAILS NO.5
33	BENT W8L DETAILS NO.1
34	BENT W8L DETAILS NO.2
35	BENT W8L DETAILS NO.3
36	BENT W8L DETAILS NO.4
37	BENT W7L DETAILS NO.1
38	BENT W7L DETAILS NO.2
39	BENT W7L DETAILS NO.3
40	PRESTRESS DETAILS - BENTS W10AL TO W9L
41	PRESTRESS DETAILS - BENTS W8L & W7L
42	BENT W6L DETAILS NO.1
42A	BENT W6L DETAILS NO.2
43	BENT W5L DETAILS NO.1
44	BENT W5L DETAILS NO.2
44A	BENT W5L DETAILS NO.3
45	BENT W4L DETAILS NO.1
45A	BENT W4L DETAILS NO.2
45B	BENT W4L DETAILS NO.3
46	BENT W3L DETAILS NO.1
47	BENT W3L DETAILS NO.2
48	BENT W10R DETAILS NO.1
49	BENT W10R DETAILS NO.2
50	BENT W10R DETAILS NO.3
51	BENT W9R DETAILS NO.1
52	BENT W9R DETAILS NO.2
53	BENT W8R DETAILS NO.1
54	BENT W8R DETAILS NO.2
55	BENT W7R DETAILS NO.1
56	BENT W7R DETAILS NO.2
57	BENT W6R DETAILS NO.1
58	BENT W6R DETAILS NO.2
59	BENT W6R DETAILS NO.3
60	BENT W5R DETAILS NO.1
61	BENT W5R DETAILS NO.2
62	BENT W4R DETAILS
63	BENT W3R DETAILS
64	COLUMN ISOLATION SLEEVE DETAILS
65	WESTBOUND TYPICAL SECTION NO.1
66	WESTBOUND TYPICAL SECTION NO.2
67	WESTBOUND TYPICAL SECTION NO.3
68	WESTBOUND TYPICAL SECTION NO.4
69	WESTBOUND TYPICAL SECTION NO.5
70	WESTBOUND TYPICAL SECTION NO.6
71	WESTBOUND TYPICAL SECTION NO.7
72	WESTBOUND TYPICAL SECTION NO.8
72A	WESTBOUND TYPICAL SECTION NO.9
73	EASTBOUND TYPICAL SECTION NO.1
74	EASTBOUND TYPICAL SECTION NO.2
75	EASTBOUND TYPICAL SECTION NO.3
76	EASTBOUND TYPICAL SECTION NO.4
77	EASTBOUND TYPICAL SECTION NO.5
78	EASTBOUND TYPICAL SECTION NO.6
79	EASTBOUND TYPICAL SECTION NO.7
80	ON-RAMP SPINE EXTENSION DETAILS NO.1
81	ON-RAMP SPINE EXTENSION DETAILS NO.2
82	WESTBOUND GIRDER LAYOUT GEOMETRICS
83	WESTBOUND GIRDER LAYOUT NO.1
84	WESTBOUND GIRDER LAYOUT NO.2
85	WESTBOUND GIRDER LAYOUT NO.3
86	WESTBOUND GIRDER LAYOUT NO.4
87	WESTBOUND GIRDER LAYOUT NO.5
88	EASTBOUND GIRDER LAYOUT GEOMETRICS
89	EASTBOUND GIRDER LAYOUT NO.1
90	EASTBOUND GIRDER LAYOUT NO.2
91	EASTBOUND GIRDER LAYOUT NO.3
92	EASTBOUND GIRDER LAYOUT NO.4
93	EASTBOUND GIRDER LAYOUT NO.5
94	EASTBOUND GIRDER LAYOUT NO.6
95	GIRDER PRESTRESS DETAILS
96	GIRDER DIAPHRAGM DETAILS NO.1
97	GIRDER DIAPHRAGM DETAILS NO.2
97A	GIRDER DIAPHRAGM DETAILS NO.3
98	MISC SUPERSTRUCTURE DETAILS NO.1
99	MISC SUPERSTRUCTURE DETAILS NO.2
100	WESTBOUND GIRDER TOP REINFORCEMENT NO.1
101	WESTBOUND GIRDER TOP REINFORCEMENT NO.2
102	WESTBOUND GIRDER TOP REINFORCEMENT NO.3
103	WESTBOUND GIRDER TOP REINFORCEMENT NO.4
104	WESTBOUND GIRDER TOP REINFORCEMENT NO.5
105	WESTBOUND GIRDER BOTTOM REINFORCEMENT NO.1
106	WESTBOUND GIRDER BOTTOM REINFORCEMENT NO.2
107	WESTBOUND GIRDER BOTTOM REINFORCEMENT NO.3
108	EASTBOUND GIRDER TOP REINFORCEMENT NO.1
109	EASTBOUND GIRDER TOP REINFORCEMENT NO.2
110	EASTBOUND GIRDER BOTTOM REINFORCEMENT NO.1
111	HINGE W7LA DETAILS NO.1
112	HINGE W7LA DETAILS NO.2
113	HINGE W7LA DETAILS NO.3
114	HINGE W6RB DETAILS NO.1
115	HINGE W6RB DETAILS NO.2
116	HINGE W6RB DETAILS NO.3
117	HINGE W6RB DETAILS NO.4
118	HINGE K CLOSURE DETAILS NO.1
119	HINGE K CLOSURE DETAILS NO.2
120	HINGE K CLOSURE DETAILS NO.3
121	HINGE K CLOSURE DETAILS NO.4
122	HINGE K CLOSURE DETAILS NO.5
123	HINGE K CLOSURE DETAILS NO.6
124	HINGE K CLOSURE DETAILS NO.7
125	HINGE K CLOSURE DETAILS NO.8
126	HINGE K CLOSURE DETAILS NO.9
127	HINGE K CLOSURE DETAILS NO.10
128	HINGE K CLOSURE DETAILS NO.11
129	HINGE K CLOSURE DETAILS NO.12
130	HINGE K CLOSURE DETAILS NO.13
131	HINGE K CLOSURE DETAILS NO.14
132	HINGE K CLOSURE DETAILS NO.15
133	CABLE RESTRAINER UNIT - TYPE 2
134	CABLE RESTRAINER UNIT - TYPE 2 DETAILS
135	SPHERICAL BEARING DETAILS
136	DECK JOINT DETAILS
137	SEISMIC JOINT
138	SEISMIC JOINT
139	SEISMIC JOINT
140	SEISMIC JOINT
141	SEISMIC JOINT
142	SEISMIC JOINT
143	SEISMIC JOINT
144	SEISMIC JOINT
145	SEISMIC JOINT
146	SEISMIC JOINT
147	SEISMIC JOINT
148	SEISMIC JOINT
149	SEISMIC JOINT
150	SEISMIC JOINT
151	SEISMIC JOINT
152	SEISMIC JOINT
153	SEISMIC JOINT
154	SEISMIC JOINT
155	SEISMIC JOINT
156	SEISMIC JOINT
157	BIKE PATH DETAILS NO.1
158	BIKE PATH DETAILS NO.2
159	FUTURE BIKE PATH DETAILS NO.1
160	FUTURE BIKE PATH DETAILS NO.2
161	FUTURE BIKE PATH DETAILS NO.3
162	BIKE PATH RAILING DETAILS NO.1
163	BIKE PATH RAILING DETAILS NO.2
164	BIKE PATH RAILING DETAILS NO.3
165	BIKE PATH RAILING DETAILS NO.4
166	CONCRETE BARRIER TYPE 732 (MOD)
167	STRUCTURE APPROACH TYPE EQ (3) - MOD
168	STRUCTURE APPROACH DRAINAGE DETAILS
169-189C	LOG OF TEST BORINGS (NO.1 TO NO.~~21~~ 24) 2
190-209	AS-BUILT LOG OF TEST BORINGS (NO.1 TO NO.20)

Caltrans Metric

DIST.	COUNTY	ROUTE	KILOMETER POST TOTAL PROJECT	SHEET NO.	TOTAL SHEETS
04	SF	80	12.7/13.2	551	806

REGISTERED ENGINEER - CIVIL

6-23-08
PLANS APPROVAL DATE

REGISTERED PROFESSIONAL ENGINEER A.L. ELY No. 18880 Exp. 6-30-09 CIVIL STATE OF CALIFORNIA

The State of California or its officers or agents shall not be responsible for the accuracy or completeness of electronic copies of this plan sheet.

T.Y. LIN / MOFFATT & NICHOL
TWO HARRISON STREET
SAN FRANCISCO, CA 94105

8

APPLICABLE STANDARD PLANS (DATED JULY 2004)

A10A	ACRONYMS AND ABBREVIATIONS (A-L)
A10B	ACRONYMS AND ABBREVIATIONS (M-Z)
A10C	SYMBOLS (1 OF 2)
A10D	SYMBOLS (2 OF 2)
A62B	LIMITS OF PAYMENT FOR EXCAVATION AND BACKFILL - BRIDGE SURCHARGE AND WALL
A62C	LIMITS OF PAYMENT FOR EXCAVATION AND BACKFILL - BRIDGE
B0-1	BRIDGE DETAILS
B0-3	BRIDGE DETAILS
B0-5	BRIDGE DETAILS
B0-13	BRIDGE DETAILS
B3-1	RETAINING WALL TYPE 1 H=1200 THROUGH 9100
B3-8	RETAINING WALL DETAILS NO.1
B7-1	BOX GIRDER DETAILS
B7-5	DECK DRAINS
B7-6	DECK DRAINS TYPES D-1 AND D-2
B7-10	UTILITY OPENING BOX GIRDER
B7-11	UTILITY DETAILS
B8-5	CAST-IN-PLACE PRESTRESSED GIRDER DETAILS
B14-3	COMMUNICATION AND SPRINKLER CONTROL CONDUITS (CONDUIT LESS THAN SIZE 103)
B14-4	WATER SUPPLY LINE (BRIDGE) (PIPE SIZES LESS THAN NPS 4)
B14-5	WATER SUPPLY LINE (DETAILS) (PIPE SIZES LESS THAN NPS 4)

2 **REVISED PER ADDENDUM No. 2 DATED JANUARY 22, 2009**

8 **REVISED PER ADDENDUM No. 8 DATED NOVEMBER 12, 2009**

DESIGN OVERSIGHT
JOHN MOOK, BERNARD CHAN, JUAN F. CARPIO
SIGN OFF DATE

	BY	CHECKED
DESIGN	Desai	Jain
DETAILS	van Ryn/Zucchi/Mai	Jain
QUANTITIES	Liao	E. Nichol

PREPARED FOR THE STATE OF CALIFORNIA DEPARTMENT OF TRANSPORTATION

Jal Birdy
PROJECT ENGINEER

BRIDGE NO. 34-0006 L/R
KILOMETER POST 12.8

SAN FRANCISCO OAKLAND BAY BRIDGE
EAST SPAN SEISMIC SAFETY PROJECT

YBI TRANSITION STRUCTURES

INDEX TO BRIDGE PLANS

Rev. Date: 5-18-98

ORIGINAL SCALE IN MILLIMETERS FOR REDUCED PLANS 0 10 20 30 40 50 60 70 80 90 100

CU 04251
EA 0120S1

DISREGARD PRINTS BEARING EARLIER REVISION DATES

REVISION DATES (PRELIMINARY STAGE ONLY) 9/13/07 01/24/08 3/28/08 5/28/08 4/29/09 8/19/09 1/24/06 10/27/06 1/24/07 6/25/07

SHEET 2 OF 209

FILE => 04-0120s1-34-006r1-a-itp.add

USERNAME => trmikesl DATE PLOTTED => 09-NOV-2009 TIME PLOTTED => 13:05

DIST.	COUNTY	ROUTE	KILOMETER POST TOTAL PROJECT	SHEET NO.	TOTAL SHEETS
04	SF	80	12.7/13.2	552	806

REGISTERED ENGINEER - CIVIL

6-23-08

PLANS APPROVAL DATE

REGISTERED PROFESSIONAL ENGINEER A.L. ELY No. 18880 Exp. 6-30-09 CIVIL STATE OF CALIFORNIA

The State of California or its officers or agents shall not be responsible for the accuracy or completeness of electronic copies of this plan sheet.

T.Y. LIN / MOFFATT & NICHOL
TWO HARRISON STREET
SAN FRANCISCO, CA 94105

QUANTITIES

PREPARE CONCRETE BRIDGE DECK SURFACE	1022 ~~765~~	m^2	2
BRIDGE REMOVAL (PORTION), LOCATION A	LUMP SUM		
STRUCTURE EXCAVATION (BRIDGE)	9 105	m^3	
STRUCTURE EXCAVATION (TYPE H)	228	m^3	
STRUCTURE EXCAVATION (RETAINING WALL)	443	m^3	
STRUCTURE BACKFILL (BRIDGE)	2 800	m^3	
STRUCTURE BACKFILL (BRIDGE)(CEMENT MODIFIED)	3 770	m^3	
STRUCTURE BACKFILL (RETAINING WALL)	428	m^3	
FURNISH STEEL PILING (HP 360 X 132)	7 544	m	
DRIVE STEEL PILE (HP 360 X 132)	615	EA	
FURNISH STEEL PILING (W 360 X 196)	1 558	m	
DRIVE STEEL PILE (W 360 X 196)	96	EA	
PRESTRESSING CAST-IN-PLACE CONCRETE (LONGITUDINAL)	LUMP SUM		
PRESTRESSING CAST-IN-PLACE CONCRETE (TRANSVERSE)	LUMP SUM		
STRUCTURAL CONCRETE, BRIDGE FOOTING	2 460	m^3	
STRUCTURAL CONCRETE, BRIDGE	32 390 ~~32 200~~	m^3	8
STRUCTURAL CONCRETE, RETAINING WALL	45	m^3	
STRUCTURAL CONCRETE, APPROACH SLAB, (TYPE EQ (3) MOD)	27	m^3	
MINOR CONCRETE (CONCRETE BALLAST)	36	m^3	
FURNISH PRECAST CONCRETE SLAB(BIKEPATH)	34	EA	2
ERECT PRECAST CONCRETE SLAB(BIKEPATH)	34	EA	
FURNISH POLYESTER CONCRETE OVERLAY (50MM)	38	m^3	
PLACE POLYESTER CONCRETE OVERLAY (50MM)	765	m^2	
PTFE SPHERICAL BEARING	10	EA	
INSTALL HINGE K BEARING ASSEMBLY	4	EA	
SEISMIC JOINT (BENT W10AL)	LUMP SUM		
SEISMIC JOINT (HINGE W7LA)	LUMP SUM		
SEISMIC JOINT (HINGE KW)	LUMP SUM		
SEISMIC JOINT (ABUT W11R)	LUMP SUM		
SEISMIC JOINT (HINGE W6RB)	LUMP SUM		
SEISMIC JOINT (HINGE KE)	LUMP SUM		
BAR REINFORCING STEEL (BRIDGE)	6 230 00 ~~6 110 000~~	kg	8
BAR REINFORCING STEEL (RETAINING WALL)	8 212	kg	
HEADED BAR REINFORCEMENT	224	EA	
CLEAN AND PAINT STRUCTURAL STEEL (MISCELLANEOUS FACILITIES)	LUMP SUM		
COLUMN ISOLATION SLEEVE	18 786	kg	
MISCELLANEOUS METAL (RESTRAINER - CABLE TYPE)	1 647	kg	
MISCELLANEOUS METAL (BRIDGE)	8 600	kg	
BRIDGE DECK DRAINAGE SYSTEM	20 070	kg	
BIKEPATH RAILING	275	m	
REMOVABLE CONCRETE COUNTERWEIGHT(BIKEPATH)	LUMP SUM		
CONCRETE BARRIER (TYPE 732 MODIFIED)	1 545	m	

FURNISH POLYESTER CONCRETE OVERLAY (19MM) 5 m^3
PLACE POLYESTER CONCRETE OVERLAY (19MM) 257 m^2

8 REVISED PER ADDENDUM No. 8 DATED NOVEMBER 12, 2009

2 REVISED PER ADDENDUM No. 2 DATED JANUARY 22, 2009

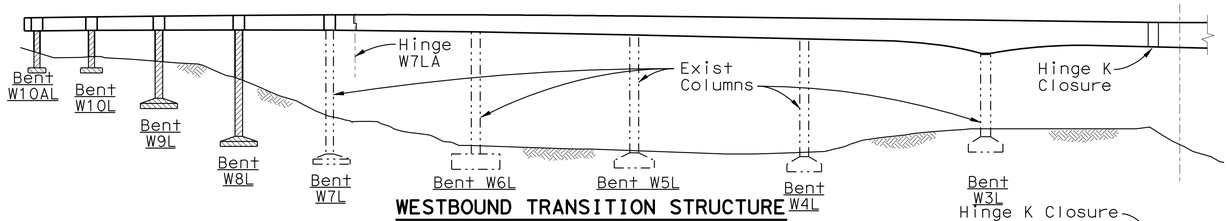

WESTBOUND TRANSITION STRUCTURE

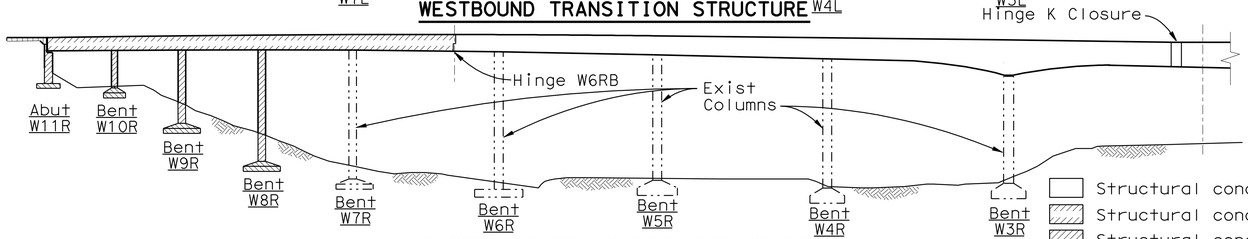

EASTBOUND TRANSITION STRUCTURE

NOTE:
Piles not shown for clarity.

CONCRETE STRENGTH & TYPE LIMITS

- Structural concrete, bridge (46 MPa at 28 days)
- Structural concrete, bridge (41 MPa at 28 days)
- Structural concrete, bridge (25 MPa at 28 days)
- Structural concrete, bridge footing (25 MPa at 28 days)
- Structural concrete, approach slab (25 MPa at 28 days)

GENERAL NOTES

Load Factor Design

Design: Caltrans Design Specifications-April 2000 (LFD)
(1996 AASHTO with interims and revisions by Caltrans)
Dead Load: Includes 1675 N/m2 for future wearing surface on roadbed
Live Load: HS20-44 and alternative and permit design load
Bike Path Live Load: 4000 N/m2
Future Mass Transit Loading:

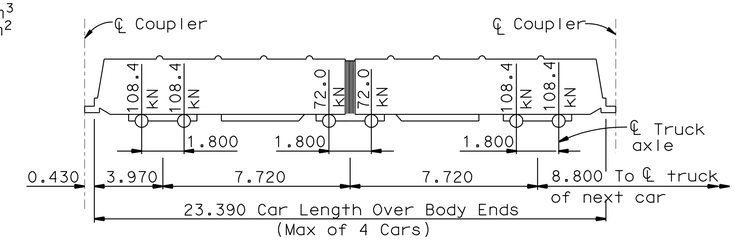

Seismic Loading: Refer to project specific seismic design criteria for San Francisco Oakland Bay Bridge East Span Seismic Safety Project Dated 01-08-00 See "Site Specific Response Spectra"

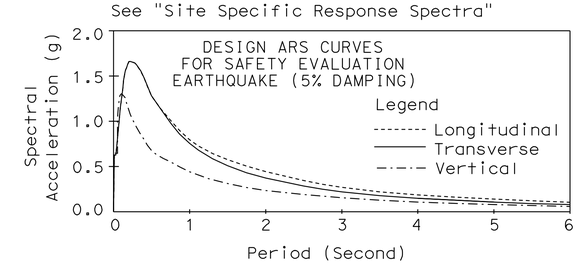

SITE SPECIFIC RESPONSE SPECTRA

Reinforced Concrete: Fy = 420 MPa
F'c = 25 MPa
N = 8

Transverse Deck Slabs
(Working Stress Design)
Fs = 140 MPa
Fc = 8 MPa
N = 10

Prestressed Concrete: See "Prestressing Notes" on "Girder Layout" & "Prestress Details - Bents W8L & W7L" sheets

ALL DIMENSIONS ARE IN METERS UNLESS OTHERWISE SHOWN

DESIGN OVERSIGHT
JOHN MOOK, BERNARD CHAN, JUAN F. CARPIO
SIGN OFF DATE

	BY	CHECKED
DESIGN	Desai	Jain
DETAILS	van Ryn/Zucchi/Mai	Jain
QUANTITIES	Liao	E. Nichol

PREPARED FOR THE STATE OF CALIFORNIA DEPARTMENT OF TRANSPORTATION

Jal Birdy
PROJECT ENGINEER

BRIDGE NO. 34-0006 L/R
KILOMETER POST 12.8

SAN FRANCISCO OAKLAND BAY BRIDGE
EAST SPAN SEISMIC SAFETY PROJECT

YBI TRANSITION STRUCTURES

GENERAL NOTES

Rev. Date: 5-18-98

ORIGINAL SCALE IN MILLIMETERS FOR REDUCED PLANS 0 10 20 30 40 50 60 70 80 90 100

CU 04251
EA 0120S1

DISREGARD PRINTS BEARING EARLIER REVISION DATES

REVISION DATES (PRELIMINARY STAGE ONLY) 9/13/07 01/31/08 3/13/08 3/26/02 5/30/02 2/14/03 3/3/06 10/27/06 1/24/07 6/25/07

SHEET 3 OF 209

FILE => 04-0120s1-34-006rl-b-gnote.add

USERNAME => trmikesl DATE PLOTTED => 09-NOV-2009 TIME PLOTTED => 13:05

DIST.	COUNTY	ROUTE	KILOMETER POST TOTAL PROJECT	SHEET NO.	TOTAL SHEETS
04	SF	80	12.7/13.2	553	806

Caltrans Metric

REGISTERED ENGINEER - CIVIL

6-23-08
PLANS APPROVAL DATE

REGISTERED PROFESSIONAL ENGINEER A.L. ELY No. 18880 Exp. 6-30-09 CIVIL STATE OF CALIFORNIA

The State of California or its officers or agents shall not be responsible for the accuracy or completeness of electronic copies of this plan sheet.

T.Y. LIN / MOFFATT & NICHOL
TWO HARRISON STREET
SAN FRANCISCO, CA 94105

2

8 REVISED PER ADDENDUM No. 8 DATED NOVEMBER 12, 2009

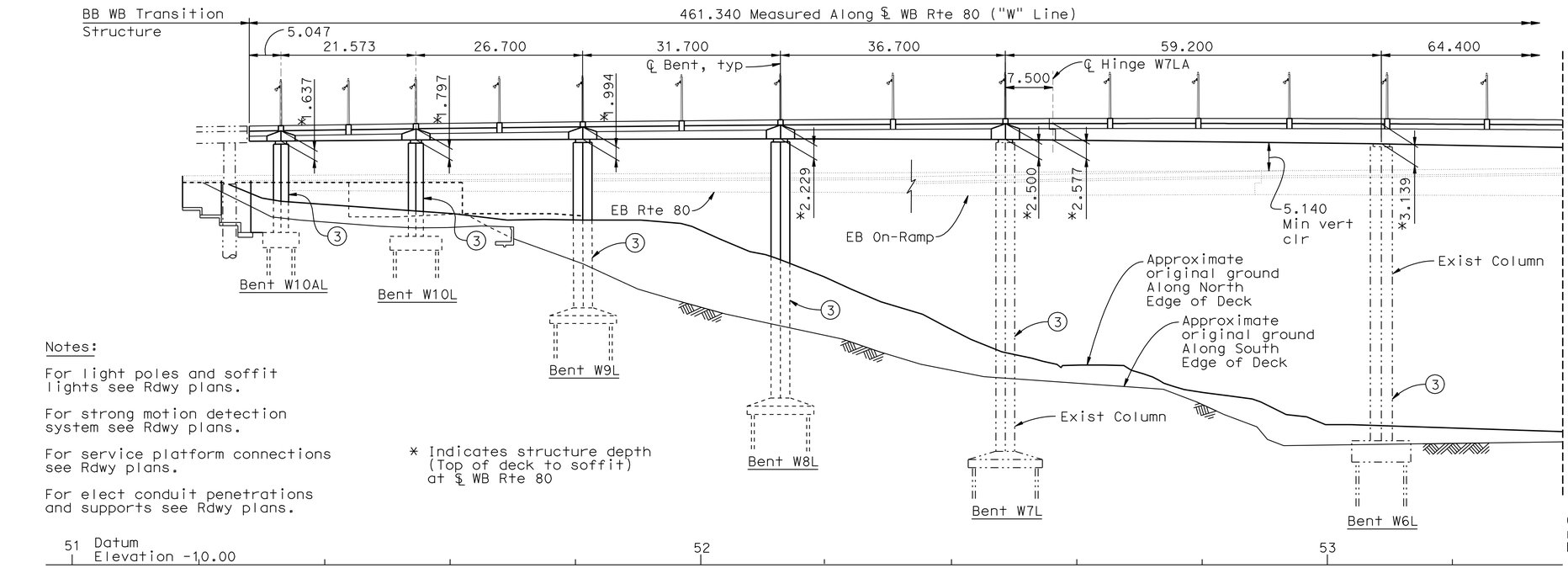

Notes:

For light poles and soffit lights see Rdwy plans.

For strong motion detection system see Rdwy plans.

For service platform connections see Rdwy plans.

For elect conduit penetrations and supports see Rdwy plans.

* Indicates structure depth (Top of deck to soffit) at ℄ WB Rte 80

PARTIAL ELEVATION
1:400

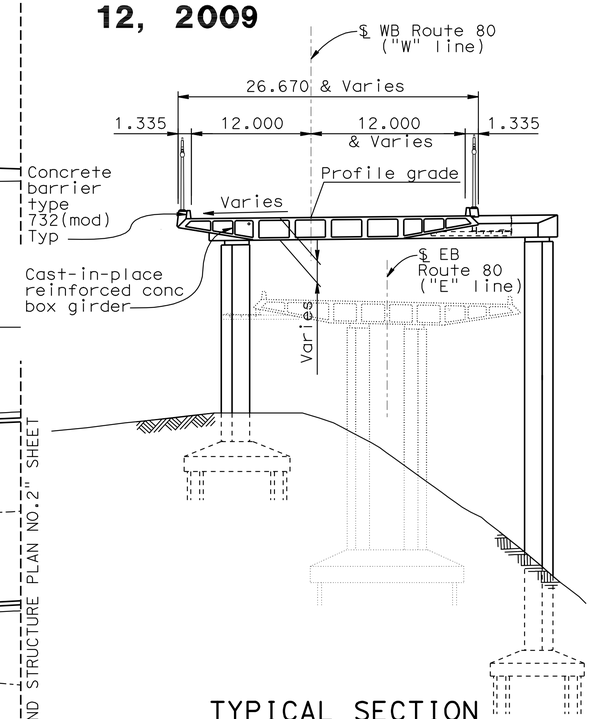

TYPICAL SECTION
(Bent W8L shown)
1:300

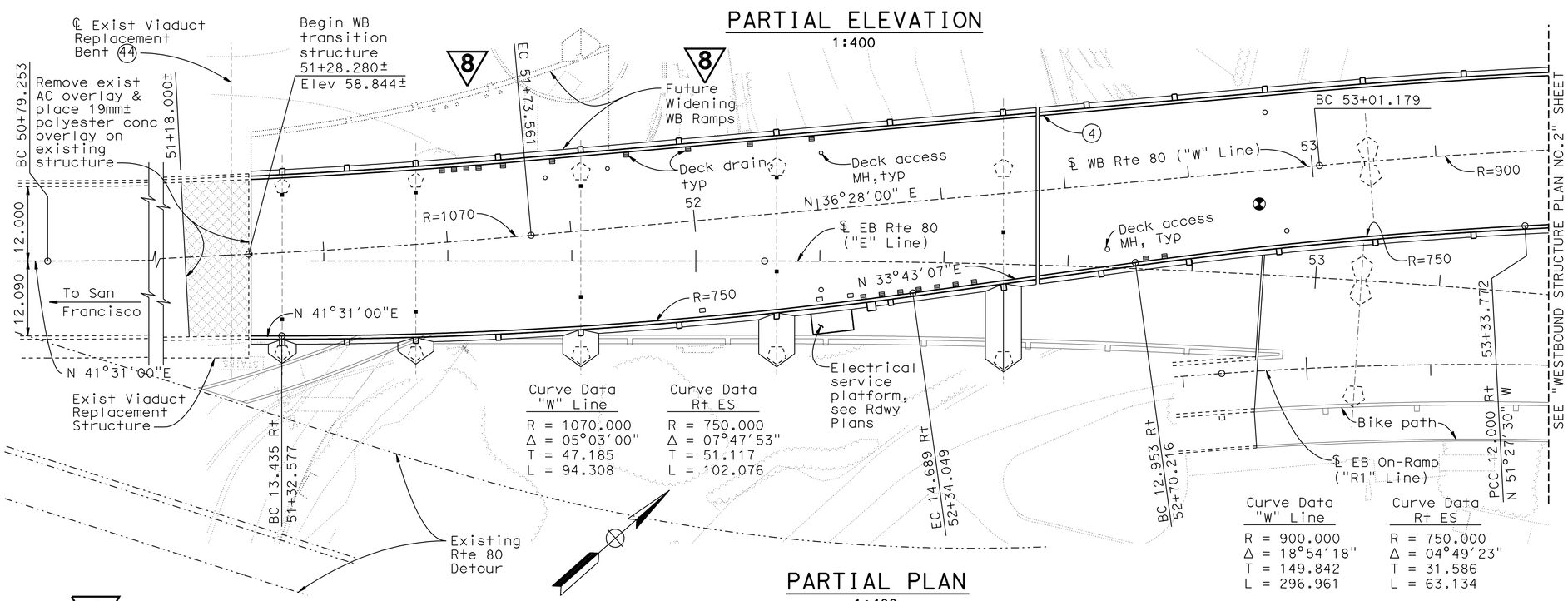

Curve Data "W" Line
R = 1070.000
Δ = 05°03'00"
T = 47.185
L = 94.308

Curve Data Rt ES
R = 750.000
Δ = 07°47'53"
T = 51.117
L = 102.076

Curve Data "W" Line
R = 900.000
Δ = 18°54'18"
T = 149.842
L = 296.961

Curve Data Rt ES
R = 750.000
Δ = 04°49'23"
T = 31.586
L = 63.134

PARTIAL PLAN
1:400

NOTES:

1. Paint "YBI WB TRANSITION STRUCTURE"
2. Paint "Bridge number 34-0006 L"
3. Paint bent number (NS & FS)
4. Paint hinge number

⊗ Indicates point of minimum vertical clearance

2 REVISED PER ADDENDUM No. 2 DATED JANUARY 22, 2009

ALL DIMENSIONS ARE IN METERS UNLESS OTHERWISE SHOWN

DESIGN OVERSIGHT
JOHN MOOK, BERNARD CHAN, JUAN F. CARPIO
SIGN OFF DATE

Rev. Date: 5-18-98

	BY	CHECKED
DESIGN	Desai	Jain
DETAILS	van Ryn/Zucchi/Mai	Jain
QUANTITIES	Liao	E. Nichol

PREPARED FOR THE STATE OF CALIFORNIA DEPARTMENT OF TRANSPORTATION

Jal Birdy
PROJECT ENGINEER

BRIDGE NO. 34-0006 L/R
KILOMETER POST 12.8

SAN FRANCISCO OAKLAND BAY BRIDGE
EAST SPAN SEISMIC SAFETY PROJECT

YBI TRANSITION STRUCTURES

WESTBOUND STRUCTURE PLAN NO.1

ORIGINAL SCALE IN MILLIMETERS FOR REDUCED PLANS 0 10 20 30 40 50 60 70 80 90 100

CU 04251
EA 0120S1

DISREGARD PRINTS BEARING EARLIER REVISION DATES

REVISION DATES (PRELIMINARY STAGE ONLY) 9/13/07 01/31/08 3/3/08 9/18/08 5/30/02 2/14/03 7/3/06 10/2/06 1/24/07 6/25/07

SHEET 4 OF 209

FILE => 04-0120s1-34-006r1-c-sp01.add

USERNAME => trmikes1 DATE PLOTTED => 09-NOV-2009 TIME PLOTTED => 13:06

DIST.	COUNTY	ROUTE	KILOMETER POST TOTAL PROJECT	SHEET NO.	TOTAL SHEETS
04	SF	80	12.7/13.2	554	806

REGISTERED ENGINEER - CIVIL

6-23-08
PLANS APPROVAL DATE

REGISTERED PROFESSIONAL ENGINEER A.L. ELY No. 18880 Exp. 6-30-09 CIVIL STATE OF CALIFORNIA

The State of California or its officers or agents shall not be responsible for the accuracy or completeness of electronic copies of this plan sheet.

T.Y. LIN / MOFFATT & NICHOL
TWO HARRISON STREET
SAN FRANCISCO, CA 94105

Caltrans Metric

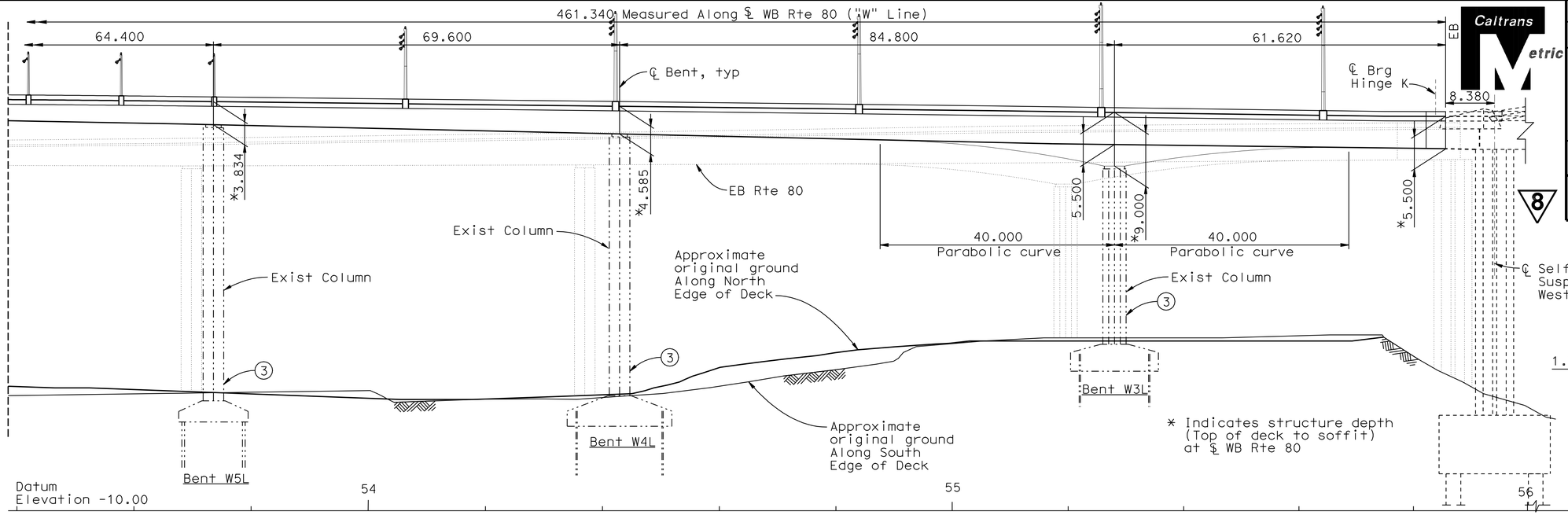

PARTIAL ELEVATION
1:400

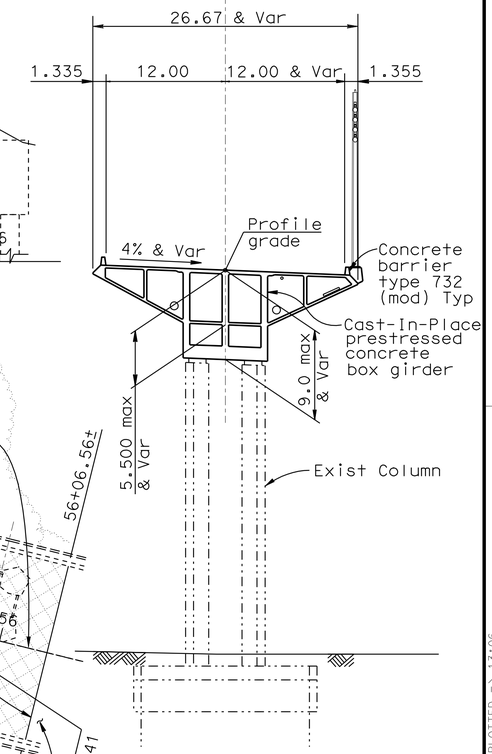

TYPICAL SECTION
(Bent W3L shown)
1:300

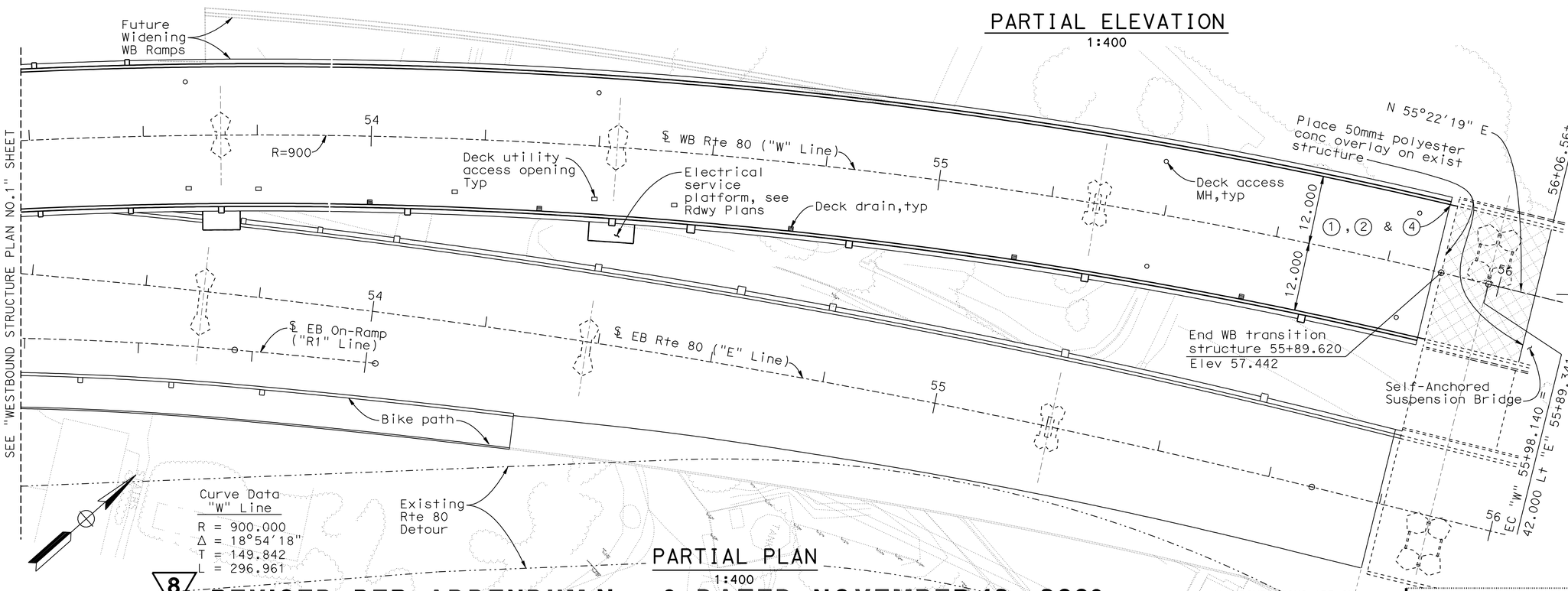

PARTIAL PLAN
1:400

NOTE:
For additional notes see "Westbound Structure Plan No.1" sheet.

8 **REVISED PER ADDENDUM No. 8 DATED NOVEMBER 12, 2009**

ALL DIMENSIONS ARE IN METERS UNLESS OTHERWISE SHOWN

DESIGN OVERSIGHT
JOHN MOOK, BERNARD CHAN, JUAN F. CARPIO
SIGN OFF DATE

	BY	CHECKED
DESIGN	Desai	Jain
DETAILS	van Ryn/Zucchi/Mai	Jain
QUANTITIES	Liao	E. Nichol

PREPARED FOR THE STATE OF CALIFORNIA DEPARTMENT OF TRANSPORTATION

Jal Birdy
PROJECT ENGINEER

BRIDGE NO. 34-0006 L/R
KILOMETER POST 12.8

SAN FRANCISCO OAKLAND BAY BRIDGE
EAST SPAN SEISMIC SAFETY PROJECT

YBI TRANSITION STRUCTURES
WESTBOUND STRUCTURE PLAN NO.2

Rev. Date: 5-18-98

ORIGINAL SCALE IN MILLIMETERS FOR REDUCED PLANS 0 10 20 30 40 50 60 70 80 90 100

CU 04251
EA 0120S1

DISREGARD PRINTS BEARING EARLIER REVISION DATES

REVISION DATES (PRELIMINARY STAGE ONLY) 9/13/07 01/31/08 3/3/08 3/28/08 8/31/09 2/14/03 7/3/06 10/4/06 1/24/07 6/28/07

SHEET 5 OF 209

FILE => 04-0120s1-34-006rl-c-sp02.dwg

USERNAME => trmikes1 DATE PLOTTED => 09-NOV-2009 TIME PLOTTED => 13:06

DIST.	COUNTY	ROUTE	KILOMETER POST TOTAL PROJECT	SHEET NO.	TOTAL SHEETS
04	SF	80	12.7/13.2	567	806

REGISTERED ENGINEER - CIVIL

6-23-08

PLANS APPROVAL DATE

REGISTERED PROFESSIONAL ENGINEER A.L. ELY No. 18880 Exp. 6-30-09 CIVIL STATE OF CALIFORNIA

The State of California or its officers or agents shall not be responsible for the accuracy or completeness of electronic copies of this plan sheet.

T.Y. LIN / MOFFATT & NICHOL
TWO HARRISON STREET
SAN FRANCISCO, CA 94105

Caltrans Metric

8

** Dimension shown is measured along ℄ bent

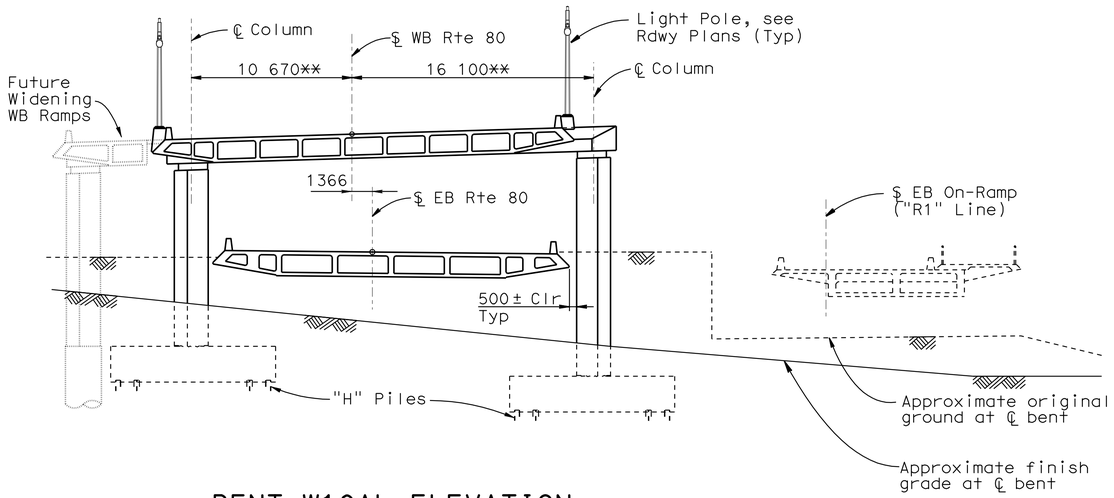

BENT W10AL ELEVATION

1:200

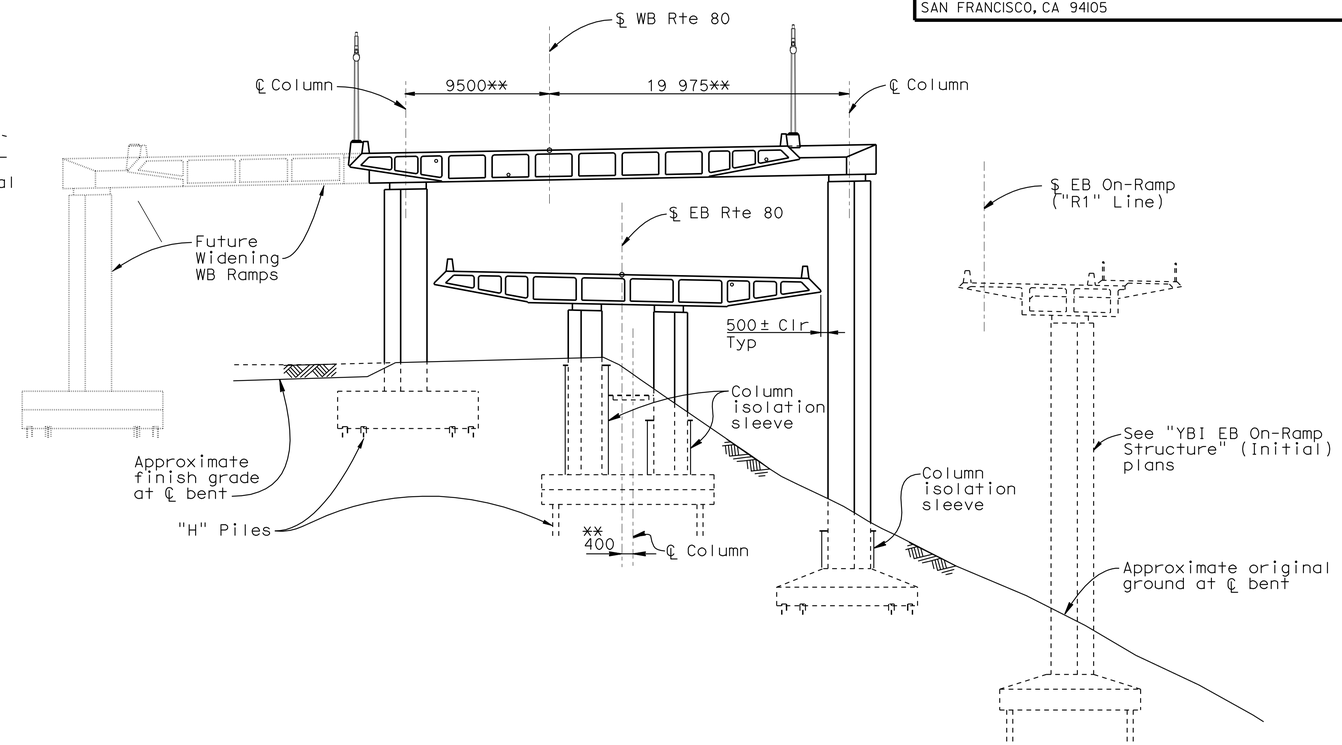

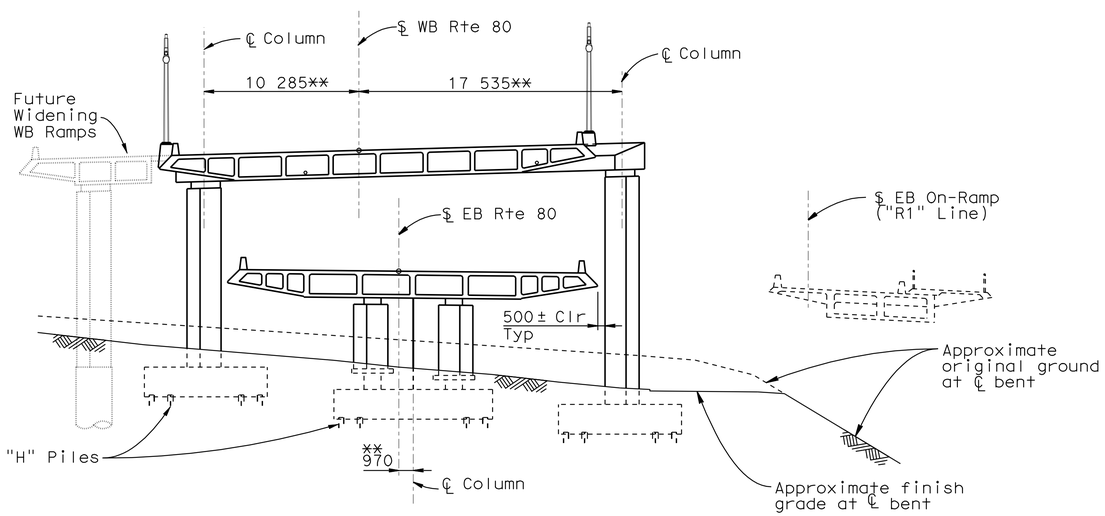

BENT W10 ELEVATION

1:200

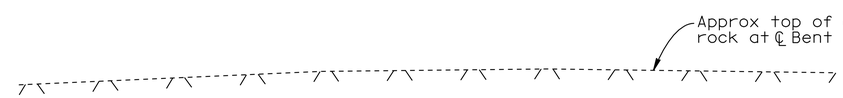

BENT W9 ELEVATION

1:200

8 **REVISED PER ADDENDUM No. 8 DATED NOVEMBER 12, 2009**

ALL DIMENSIONS ARE IN MILLIMETERS UNLESS OTHERWISE SHOWN

DESIGN OVERSIGHT
JOHN MOOK, BERNARD CHAN, JUAN F. CARPIO

SIGN OFF DATE

	BY	CHECKED
DESIGN	Desai	Jain
DETAILS	van Ryn/Zucchi/Mai	Jain
QUANTITIES	Liao	E. Nichol

PREPARED FOR THE STATE OF CALIFORNIA DEPARTMENT OF TRANSPORTATION

Jal Birdy
PROJECT ENGINEER

BRIDGE NO. 34-0006 L/R
KILOMETER POST 12.8

SAN FRANCISCO OAKLAND BAY BRIDGE
EAST SPAN SEISMIC SAFETY PROJECT

YBI TRANSITION STRUCTURES

BENT ELEVATIONS W10AL TO W9

Rev. Date: 5-18-98

ORIGINAL SCALE IN MILLIMETERS FOR REDUCED PLANS 0 10 20 30 40 50 60 70 80 90 100

CU 04251
EA 0120S1

DISREGARD PRINTS BEARING EARLIER REVISION DATES

REVISION DATES (PRELIMINARY STAGE ONLY): 9/13/01 01/31/08 3/13/08 3/26/02 5/30/02 2/14/03 3/3/06 10/4/06 1/24/07 6/28/07

SHEET 18 OF 209

FILE => 04-0120s1-34-006r1-h-bde†01.add

USERNAME => trmikesl DATE PLOTTED => 09-NOV-2009 TIME PLOTTED => 13:06

8 REVISED PER ADDENDUM No. 8 DATED NOVEMBER 12, 2009

** Dimension shown is measured along ℄ bent

DIST.	COUNTY	ROUTE	KILOMETER POST TOTAL PROJECT	SHEET NO.	TOTAL SHEETS
04	SF	80	12.7/13.2	569	806

REGISTERED ENGINEER - CIVIL
6-23-08
PLANS APPROVAL DATE

REGISTERED PROFESSIONAL ENGINEER A.L. ELY No. 18880 Exp. 6-30-09 CIVIL STATE OF CALIFORNIA

The State of California or its officers or agents shall not be responsible for the accuracy or completeness of electronic copies of this plan sheet.

T.Y. LIN / MOFFATT & NICHOL
TWO HARRISON STREET
SAN FRANCISCO, CA 94105

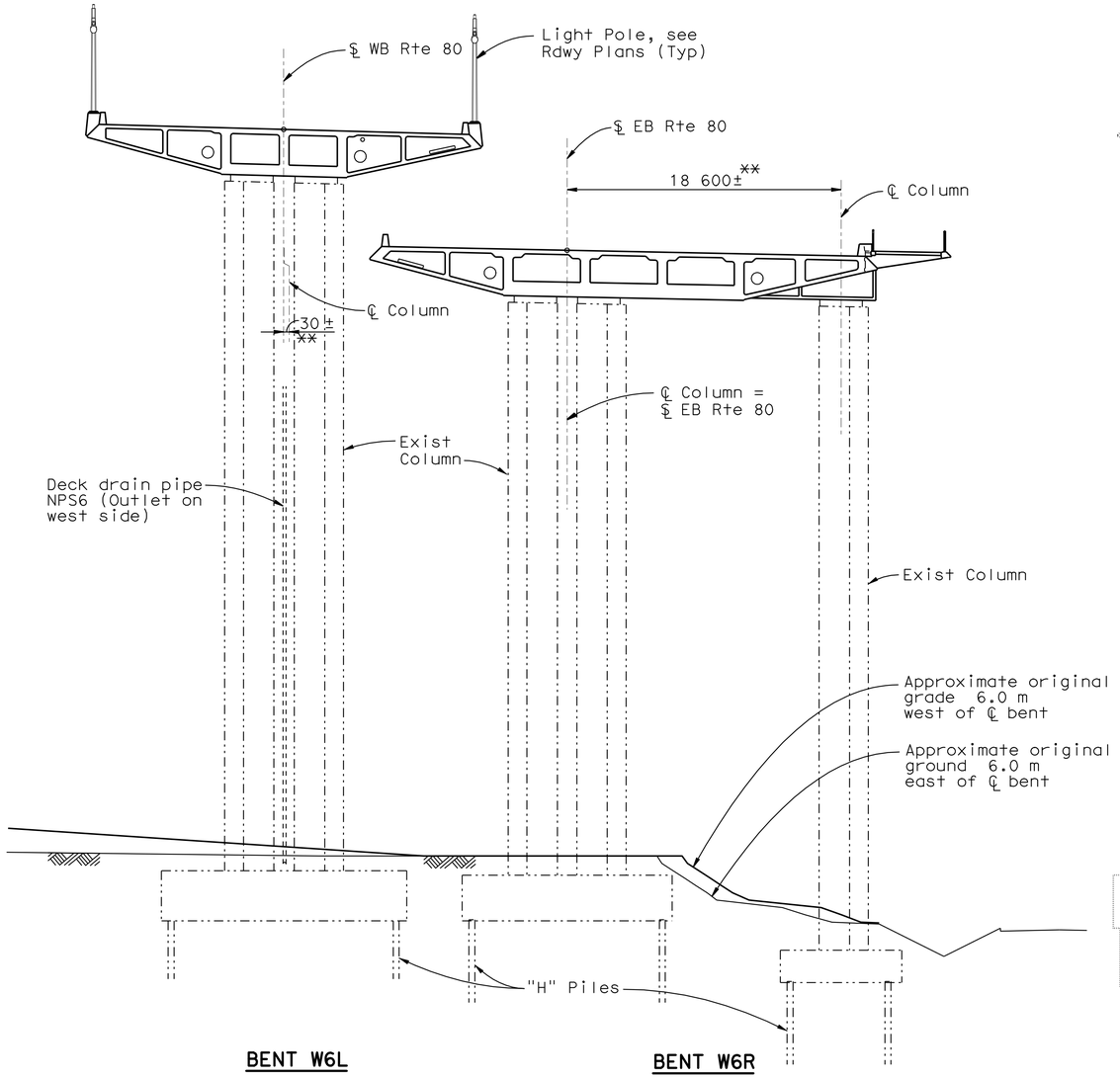

BENT W6 ELEVATION
1:200

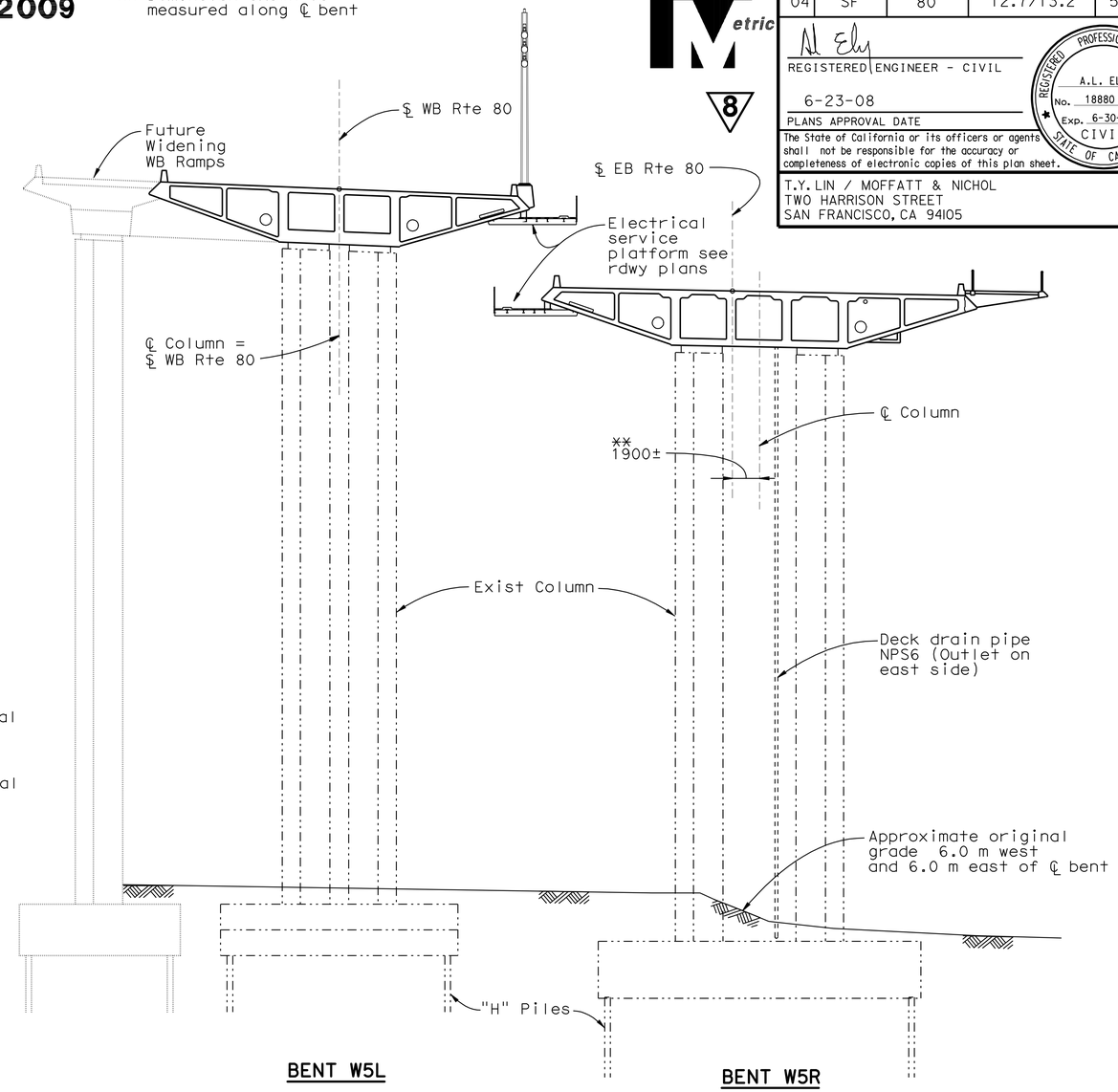

BENT W5 ELEVATION
1:200

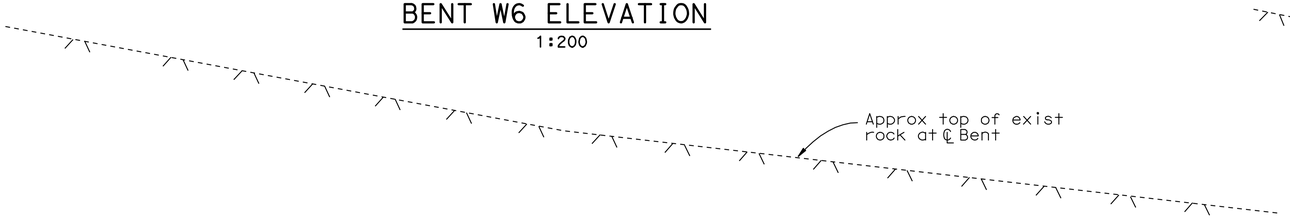

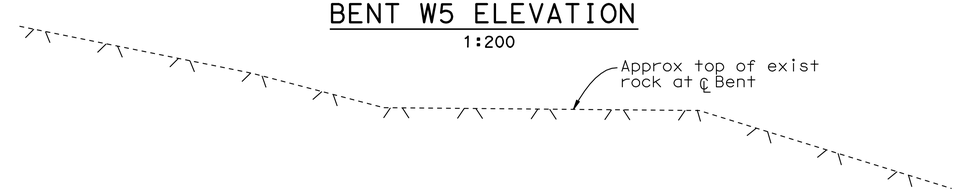

ALL DIMENSIONS ARE IN MILLIMETERS UNLESS OTHERWISE SHOWN

DESIGN OVERSIGHT
JOHN MOOK, BERNARD CHAN, JUAN F. CARPIO
SIGN OFF DATE

DESIGN	BY Desai	CHECKED Jain	
DETAILS	BY van Ryn/Zucchi/Mai	CHECKED Jain	
QUANTITIES	BY Liao	CHECKED E. Nichol	

PREPARED FOR THE STATE OF CALIFORNIA DEPARTMENT OF TRANSPORTATION

Jal Birdy
PROJECT ENGINEER

BRIDGE NO. 34-0006 L/R
KILOMETER POST 12.8

SAN FRANCISCO OAKLAND BAY BRIDGE
EAST SPAN SEISMIC SAFETY PROJECT

YBI TRANSITION STRUCTURES

BENT ELEVATIONS W6 TO W5

Rev. Date: 5-18-98

ORIGINAL SCALE IN MILLIMETERS FOR REDUCED PLANS 0 10 20 30 40 50 60 70 80 90 100

CU 04251
EA 0120S1

DISREGARD PRINTS BEARING EARLIER REVISION DATES

REVISION DATES (PRELIMINARY STAGE ONLY) 9/13/01 01/31/08 3/31/08 8/31/09 5/30/02 2/14/03 1/3/06 10/27/06 1/24/07 6/25/07

SHEET 20 OF 209

FILE => 04-0120s1-34-006r1-h-bdet03.add

USERNAME => trmikest DATE PLOTTED => 09-NOV-2009 TIME PLOTTED => 13:07

DIST.	COUNTY	ROUTE	KILOMETER POST TOTAL PROJECT	SHEET NO.	TOTAL SHEETS
04	SF	80	12.7/13.2	570	806

Caltrans Metric

REGISTERED ENGINEER - CIVIL

6-23-08
PLANS APPROVAL DATE

REGISTERED PROFESSIONAL ENGINEER A.L. ELY No. 18880 Exp. 6-30-09 CIVIL STATE OF CALIFORNIA

The State of California or its officers or agents shall not be responsible for the accuracy or completeness of electronic copies of this plan sheet.

T.Y. LIN / MOFFATT & NICHOL
TWO HARRISON STREET
SAN FRANCISCO, CA 94105

8

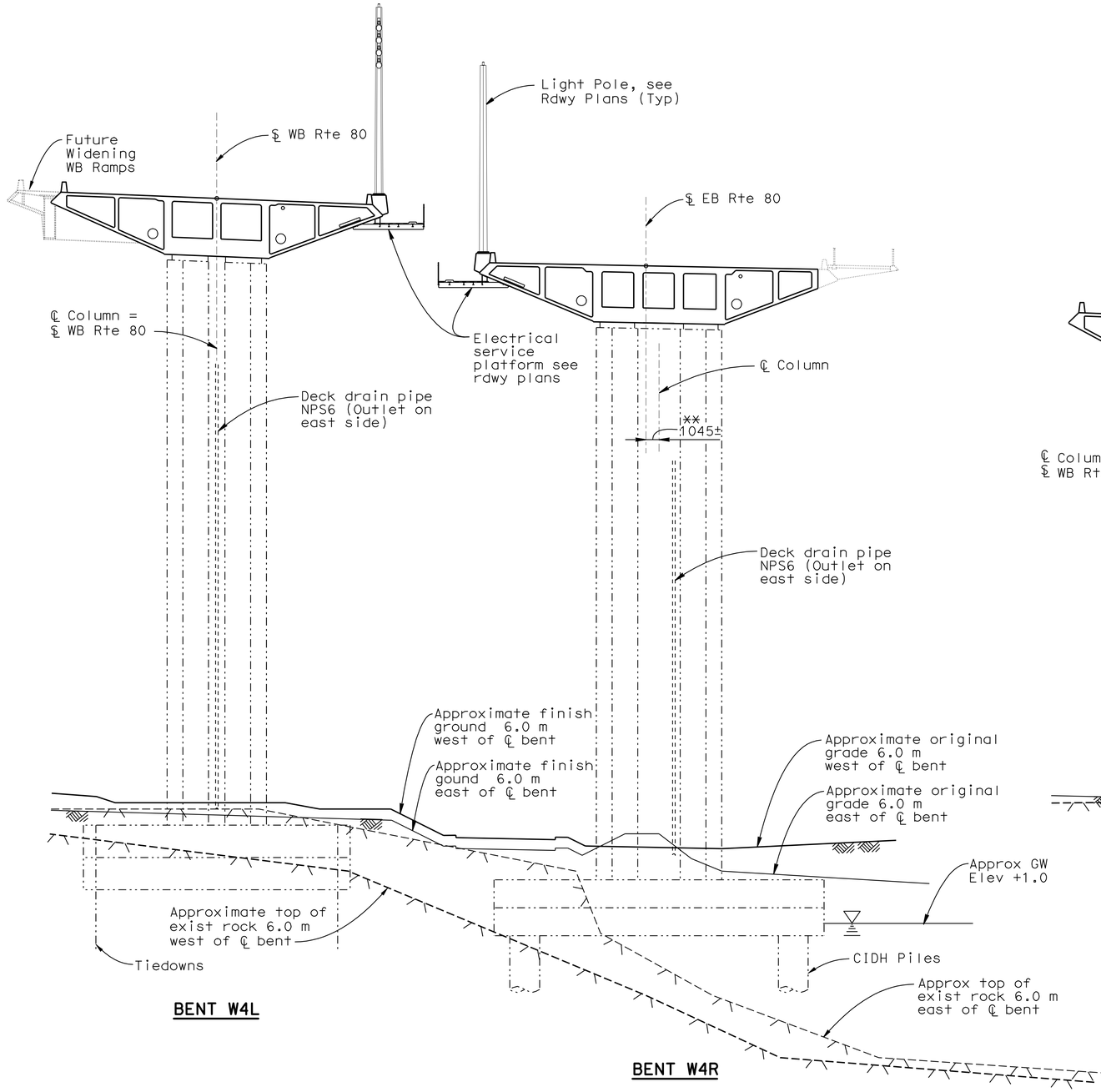

BENT W4 ELEVATION
1:200

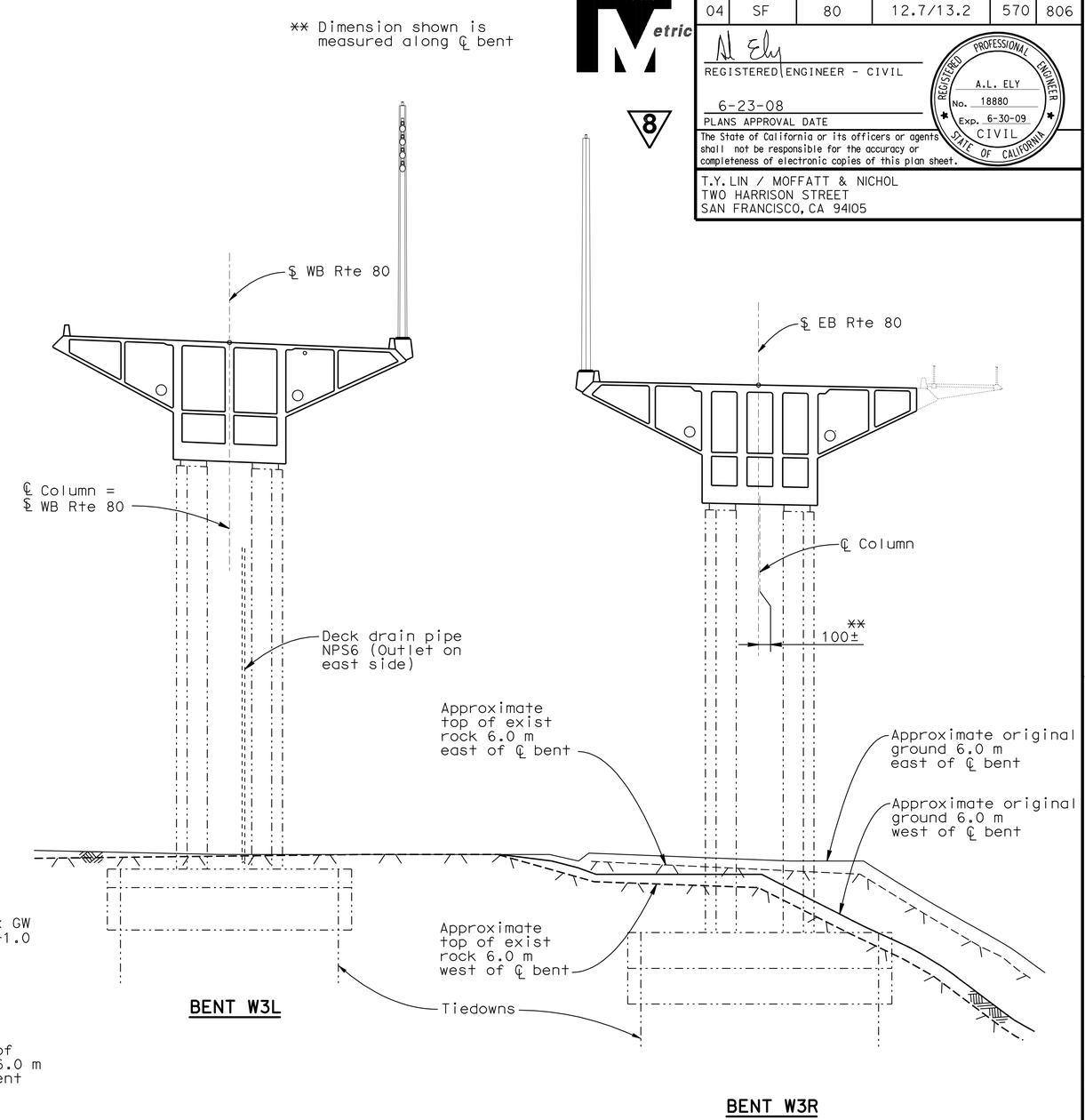

BENT W3 ELEVATION
1:200

8 **REVISED PER ADDENDUM No. 8 DATED NOVEMBER 12, 2009**

ALL DIMENSIONS ARE IN MILLIMETERS UNLESS OTHERWISE SHOWN

DESIGN OVERSIGHT
JOHN MOOK, BERNARD CHAN, JUAN F. CARPIO

SIGN OFF DATE

Rev. Date: 5-18-98

	BY	CHECKED
DESIGN	Desai	Jain
DETAILS	van Ryn/Zucchi/Mai	Jain
QUANTITIES	Liao	E. Nichol

PREPARED FOR THE STATE OF CALIFORNIA DEPARTMENT OF TRANSPORTATION

Jal Birdy
PROJECT ENGINEER

BRIDGE NO. 34-0006 L/R
KILOMETER POST 12.8

SAN FRANCISCO OAKLAND BAY BRIDGE
EAST SPAN SEISMIC SAFETY PROJECT

YBI TRANSITION STRUCTURES

BENT ELEVATIONS W4 TO W3

ORIGINAL SCALE IN MILLIMETERS FOR REDUCED PLANS 0 10 20 30 40 50 60 70 80 90 100

CU 04251
EA 0120S1

DISREGARD PRINTS BEARING EARLIER REVISION DATES

REVISION DATES (PRELIMINARY STAGE ONLY): 9/13/07 01/31/08 3/31/08 8/18/09 8/31/09 2/14/05 3/3/06 10/4/06 1/24/07 6/28/07

SHEET 21 OF 209

FILE => 04-0120s1-34-006ri-h-bdet04.dwg

USERNAME => trmikest DATE PLOTTED => 09-NOV-2009 TIME PLOTTED => 13:07

DIST.	COUNTY	ROUTE	KILOMETER POST TOTAL PROJECT	SHEET NO.	TOTAL SHEETS
04	SF	80	12.7/13.2	571	806

REGISTERED ENGINEER - CIVIL

6-23-08

PLANS APPROVAL DATE

REGISTERED PROFESSIONAL ENGINEER A.L. ELY No. 18880 Exp. 6-30-09 CIVIL STATE OF CALIFORNIA

The State of California or its officers or agents shall not be responsible for the accuracy or completeness of electronic copies of this plan sheet.

T.Y. LIN / MOFFATT & NICHOL
TWO HARRISON STREET
SAN FRANCISCO, CA 94105

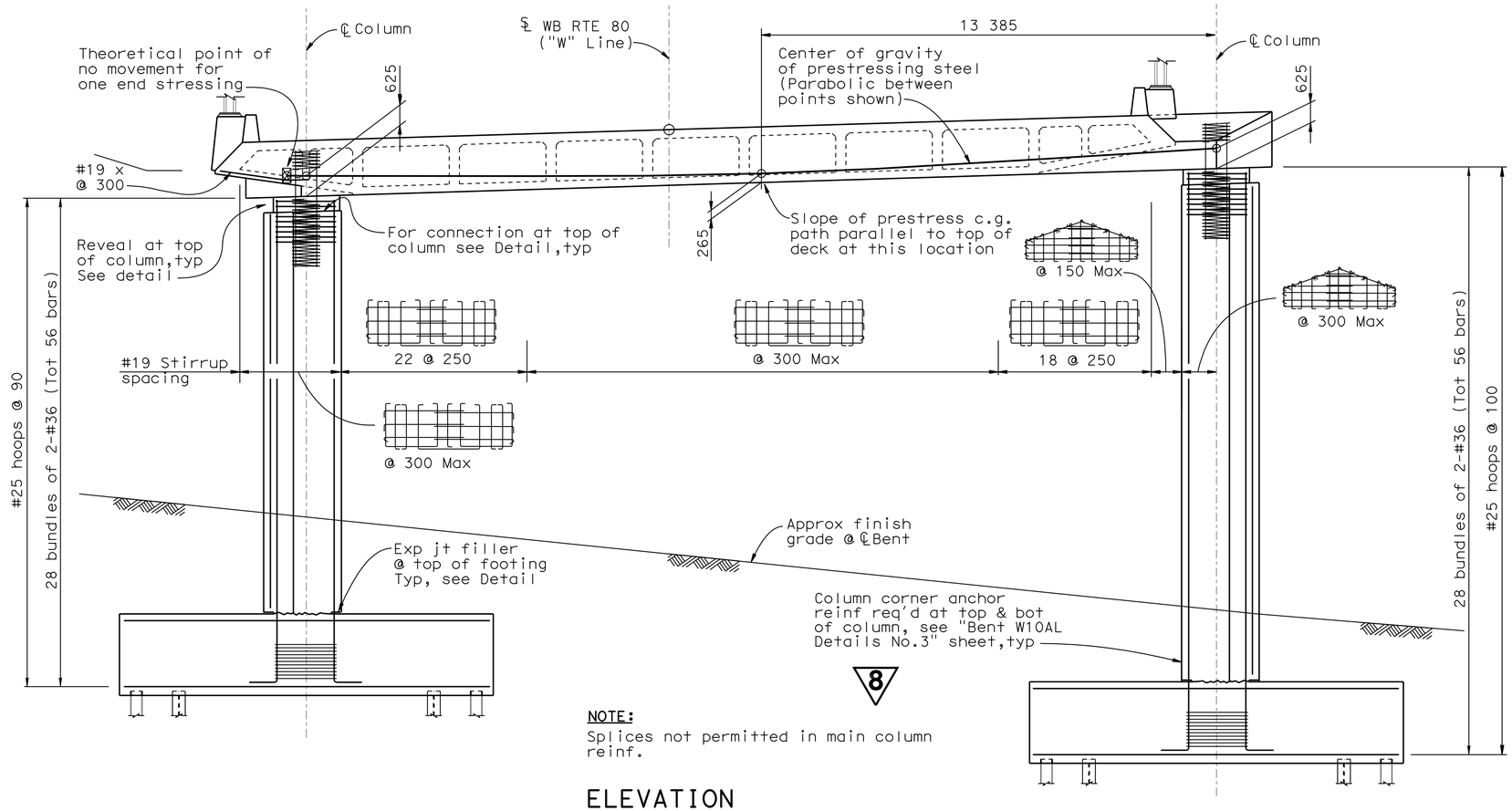

NOTE:
Splices not permitted in main column reinf.

ELEVATION
1:80

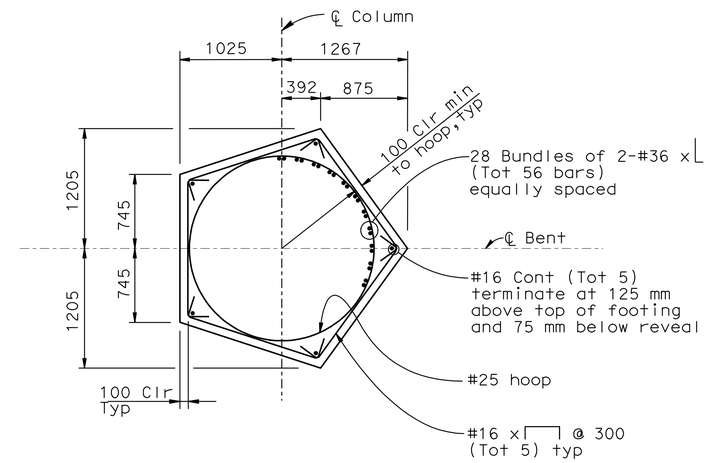

TYPICAL COLUMN SECTION
(South column shown, North column opposite hand)
1:30

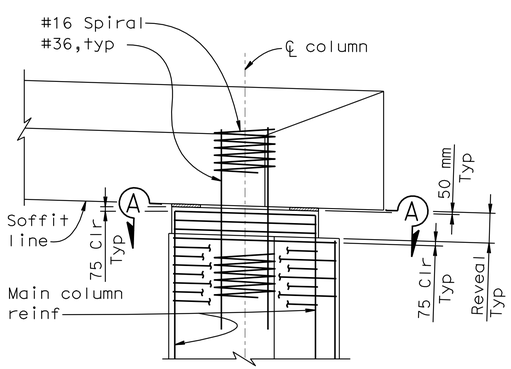

ELEVATION

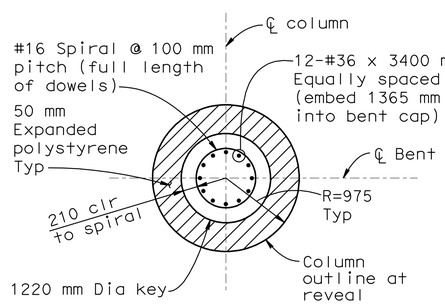

SECTION A-A

CONNECTION DETAIL AT TOP OF COLUMNS
(Typical Bents W10AL & W10L)
No Scale

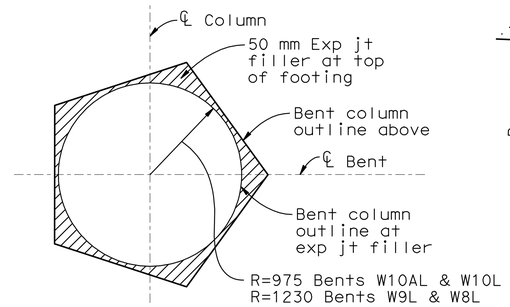

EXP JT FILLER AT TOP OF FOOTING
(Typical Bents W10AL to W8L)
No Scale

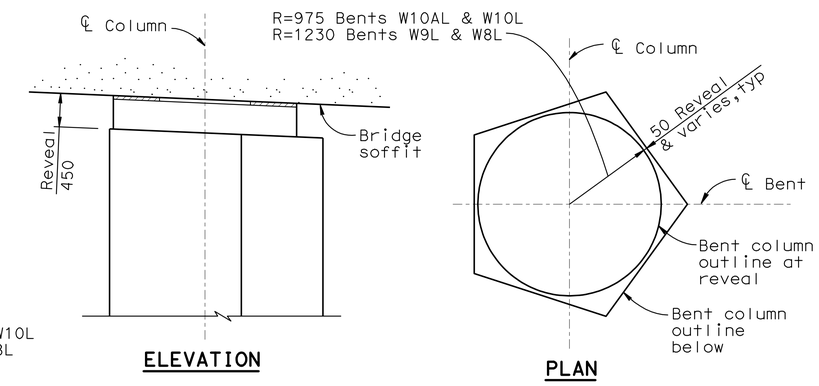

ELEVATION

PLAN

REVEAL DETAIL AT TOP OF COLUMN
(Typical Bents W10AL to W8L)
No Scale

8 REVISED PER ADDENDUM No. 8 DATED NOVEMBER 12, 2009

ALL DIMENSIONS ARE IN MILLIMETERS UNLESS OTHERWISE SHOWN

DESIGN OVERSIGHT
JOHN MOOK, BERNARD CHAN, JUAN F. CARPIO
March 3, 2008
SIGN OFF DATE

Rev. Date: 5-18-98

	BY	CHECKED
DESIGN	Xie/Shangkuan	Ahn
DETAILS	van Ryn/Zucchi/Mai	Jain
QUANTITIES	Liao	E. Nichol

ORIGINAL SCALE IN MILLIMETERS FOR REDUCED PLANS 0 10 20 30 40 50 60 70 80 90 100

PREPARED FOR THE STATE OF CALIFORNIA DEPARTMENT OF TRANSPORTATION

Jal Birdy
PROJECT ENGINEER

CU 04251
EA 0120S1

BRIDGE NO. 34-0006 L/R
KILOMETER POST 12.8

SAN FRANCISCO OAKLAND BAY BRIDGE
EAST SPAN SEISMIC SAFETY PROJECT

YBI TRANSITION STRUCTURES

BENT W10AL DETAILS NO.1

DISREGARD PRINTS BEARING EARLIER REVISION DATES

REVISION DATES (PRELIMINARY STAGE ONLY): 9/13/07 01/31/08 3/3/08 5/22/09 8/19/09 2/14/05 1/3/06 10/4/06 1/24/07 6/25/07

SHEET 22 OF 209

FILE => 04-0120s1-34-006r1-h-bdet05.add

USERNAME => trmikest DATE PLOTTED => 09-NOV-2009 TIME PLOTTED => 13:07

DIST.	COUNTY	ROUTE	KILOMETER POST TOTAL PROJECT	SHEET NO.	TOTAL SHEETS
04	SF	80	12.7/13.2	572	806

Caltrans Metric

8

2

REGISTERED ENGINEER - CIVIL

6-23-08

PLANS APPROVAL DATE

REGISTERED PROFESSIONAL ENGINEER A.L. ELY No. 18880 Exp. 6-30-09 CIVIL STATE OF CALIFORNIA

The State of California or its officers or agents shall not be responsible for the accuracy or completeness of electronic copies of this plan sheet.

T.Y. LIN / MOFFATT & NICHOL
TWO HARRISON STREET
SAN FRANCISCO, CA 94105

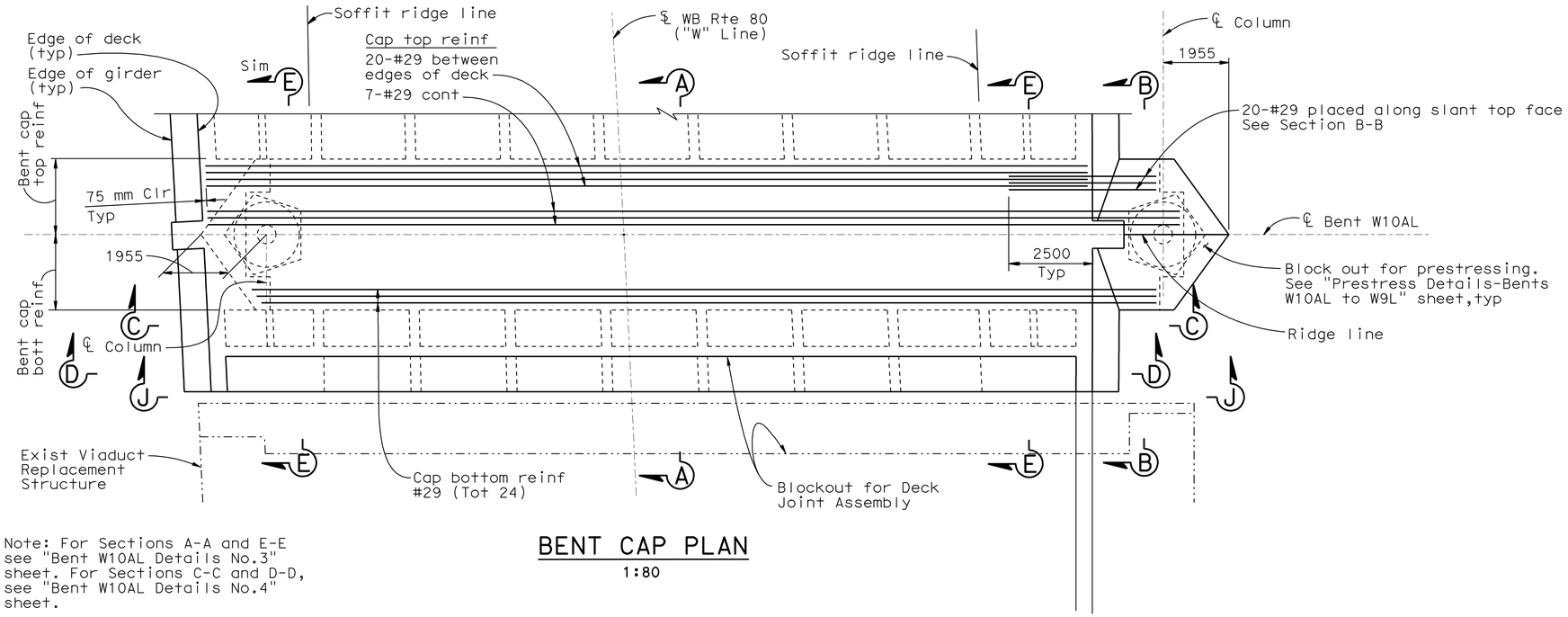

Note: For Sections A-A and E-E see "Bent W10AL Details No.3" sheet. For Sections C-C and D-D, see "Bent W10AL Details No.4" sheet.

BENT CAP PLAN
1:80

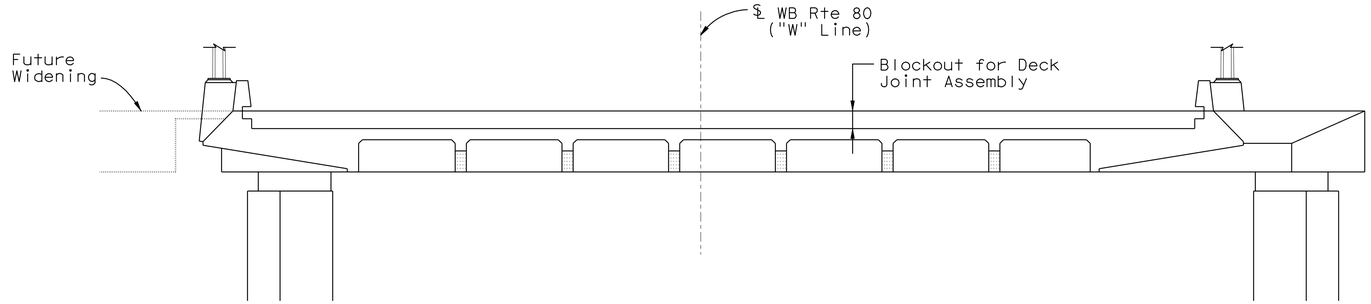

SECTION J-J
1:80

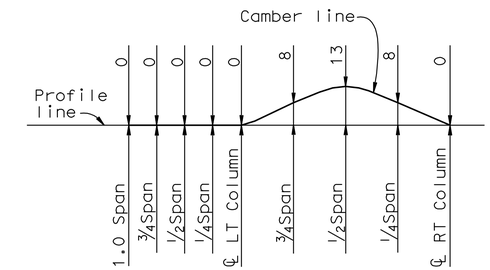

BENT CAP CAMBER DIAGRAM
No scale

Note:
Camber values shown do not include allowance for falsework settlement.

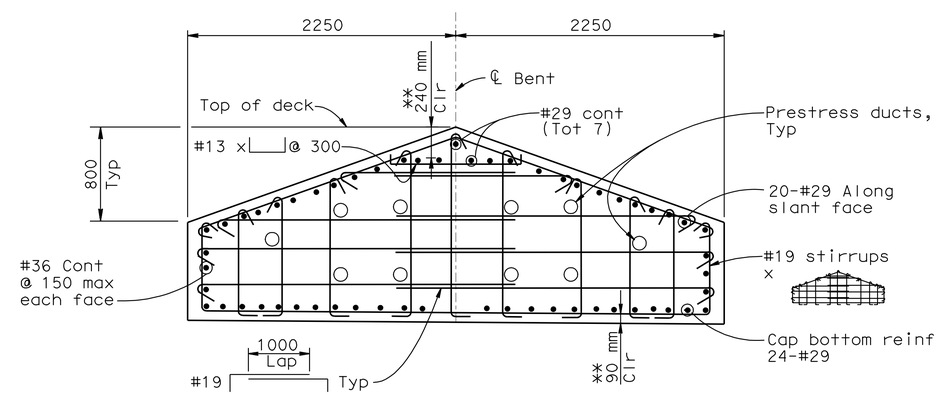

NOTE: Construction joint not permitted in this portion of bent cap.

SECTION B-B
1:25

** Indicates clearance to main cap reinf.

2 REVISED PER ADDENDUM No. 2 DATED JANUARY 22, 2009

8 REVISED PER ADDENDUM No. 8 DATED NOVEMBER 12, 2009

DESIGN OVERSIGHT
JOHN MOOK, BERNARD CHAN, JUAN F. CARPIO
March 3, 2008
SIGN OFF DATE

Rev. Date: 5-18-98

	BY	CHECKED
DESIGN	Xie	Ahn
DETAILS	van Ryn/Zucchi/Mai	Jain
QUANTITIES	Liao	E. Nichol

PREPARED FOR THE STATE OF CALIFORNIA DEPARTMENT OF TRANSPORTATION

Jal Birdy
PROJECT ENGINEER

BRIDGE NO. 34-0006 L/R
KILOMETER POST 12.8

SAN FRANCISCO OAKLAND BAY BRIDGE
EAST SPAN SEISMIC SAFETY PROJECT

YBI TRANSITION STRUCTURES

BENT W10AL DETAILS NO.2

ORIGINAL SCALE IN MILLIMETERS FOR REDUCED PLANS 0 10 20 30 40 50 60 70 80 90 100

CU 04251
EA 0120S1

DISREGARD PRINTS BEARING EARLIER REVISION DATES

REVISION DATES (PRELIMINARY STAGE ONLY) 9/13/07 01/31/08 3/14/08 9/18/08 12/12/08 5/22/09 8/19/09 10/12/06 1/24/07 6/25/07

SHEET 23 OF 209

FILE => 04-0120s1-34-006rl-h-bdet06.add

USERNAME => trmikes1 DATE PLOTTED => 09-NOV-2009 TIME PLOTTED => 13:07

DIST.	COUNTY	ROUTE	KILOMETER POST TOTAL PROJECT	SHEET NO.	TOTAL SHEETS
04	SF	80	12.7/13.2	573	806

Caltrans Metric

REGISTERED ENGINEER - CIVIL

6-23-08

PLANS APPROVAL DATE

REGISTERED PROFESSIONAL ENGINEER A.L. ELY No. 18880 Exp. 6-30-09 CIVIL STATE OF CALIFORNIA

The State of California or its officers or agents shall not be responsible for the accuracy or completeness of electronic copies of this plan sheet.

T.Y. LIN / MOFFATT & NICHOL
TWO HARRISON STREET
SAN FRANCISCO, CA 94105

8

Note: For location of Sections C-C and E-E, see "Bent W10AL Details No.2" sheet.

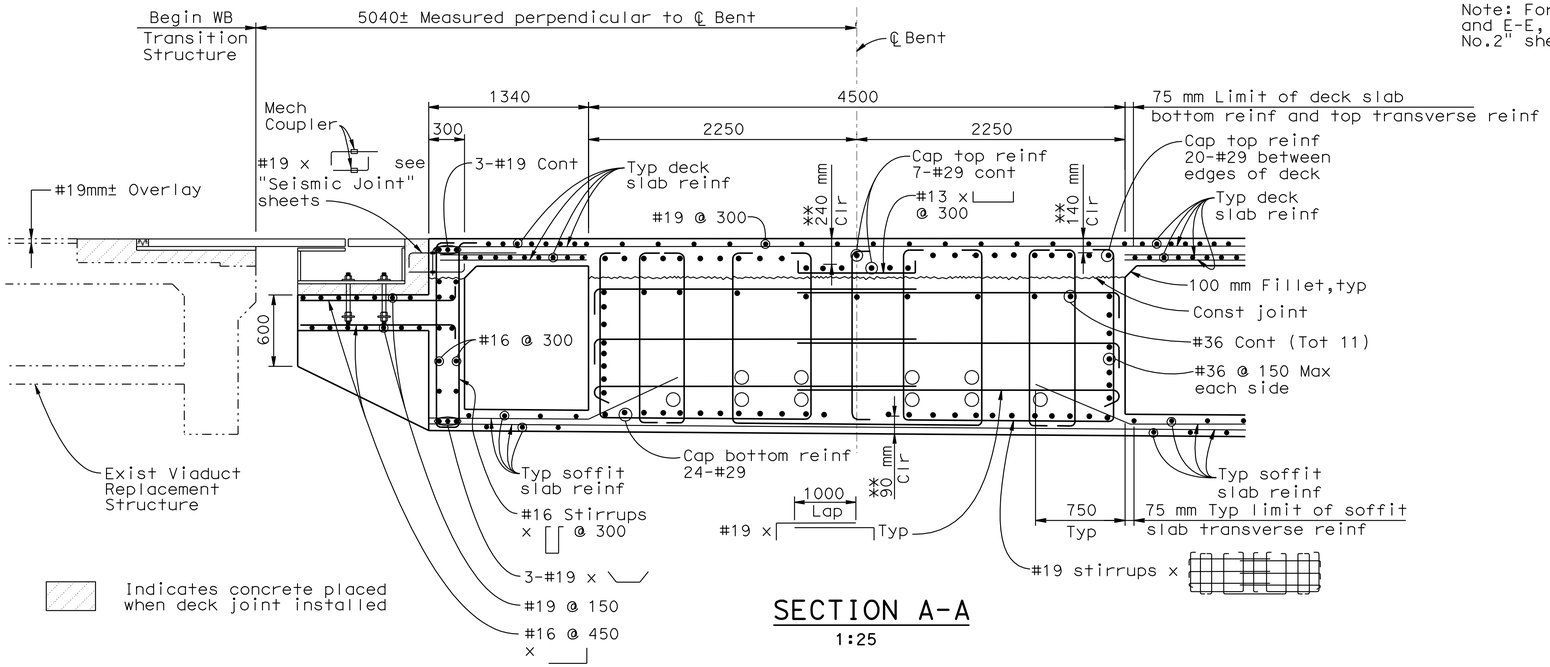

SECTION A-A

1:25

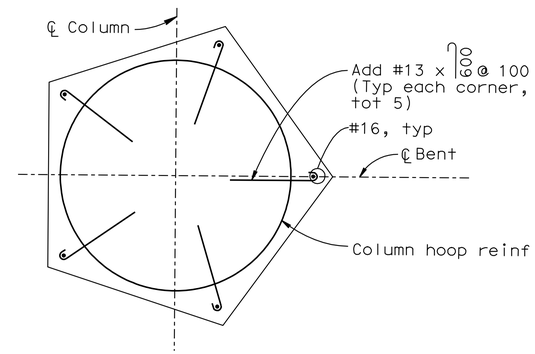

DETAIL D - COLUMN CORNER ANCHOR REINFORCEMENT

(Column corner anchor reinf to be provided in regions within 3000 mm of bridge soffit or top of footing)

No Scale

Note: For details not shown, see Section A-A.

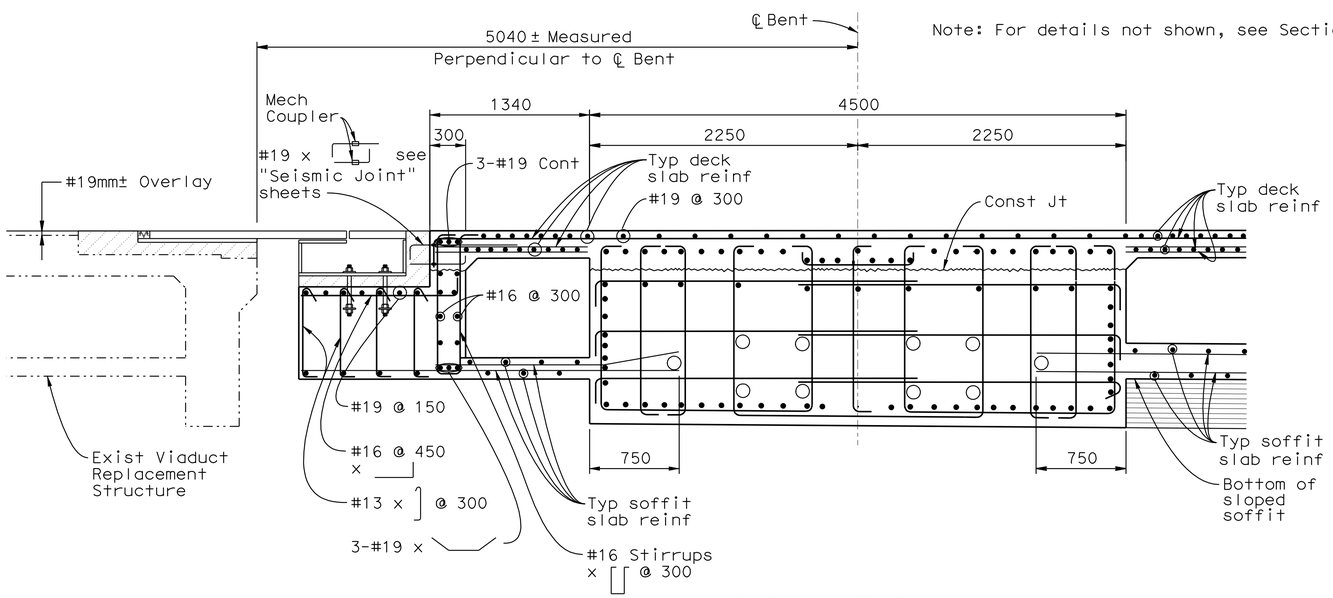

SECTION E-E

1:25

8 **REVISED PER ADDENDUM No. 8 DATED NOVEMBER 12, 2009**

ALL DIMENSIONS ARE IN MILLIMETERS UNLESS OTHERWISE SHOWN

SAN FRANCISCO OAKLAND BAY BRIDGE
EAST SPAN SEISMIC SAFETY PROJECT

YBI TRANSITION STRUCTURES

BENT W10AL DETAILS NO.3

DESIGN OVERSIGHT
JOHN MOOK, BERNARD CHAN, JUAN F. CARPIO

SIGN OFF DATE

	BY	CHECKED
DESIGN	Dodd	Desai
DETAILS	van Ryn/Zucchi/Mai	Jain
QUANTITIES	Liao	E. Nichol

PREPARED FOR THE STATE OF CALIFORNIA DEPARTMENT OF TRANSPORTATION

Jal Birdy
PROJECT ENGINEER

BRIDGE NO. 34-0006 L/R
KILOMETER POST 12.8

Rev. Date: 5-18-98

ORIGINAL SCALE IN MILLIMETERS FOR REDUCED PLANS 0 10 20 30 40 50 60 70 80 90 100

CU 04251
EA 0120S1

DISREGARD PRINTS BEARING EARLIER REVISION DATES

REVISION DATES (PRELIMINARY STAGE ONLY) 9/13/07 01/24/08 3/24/08 4/3/09 5/22/09 8/13/09 8/31/09 10/4/06 1/24/07 6/26/07

SHEET 24 OF 209

FILE => 04-0120s1-34-006rl-h-bde†07.add

USERNAME => trmikest DATE PLOTTED => 09-NOV-2009 TIME PLOTTED => 13:07

DIST.	COUNTY	ROUTE	KILOMETER POST TOTAL PROJECT	SHEET NO.	TOTAL SHEETS
04	SF	80	12.7/13.2	574	806

REGISTERED ENGINEER - CIVIL

6-23-08
PLANS APPROVAL DATE

REGISTERED PROFESSIONAL ENGINEER A.L. ELY No. 18880 Exp. 6-30-09 CIVIL STATE OF CALIFORNIA

The State of California or its officers or agents shall not be responsible for the accuracy or completeness of electronic copies of this plan sheet.

T.Y. LIN / MOFFATT & NICHOL
TWO HARRISON STREET
SAN FRANCISCO, CA 94105

Caltrans Metric

8 2

Note: For details not shown, see "WB Typical Section No.1" sheet.

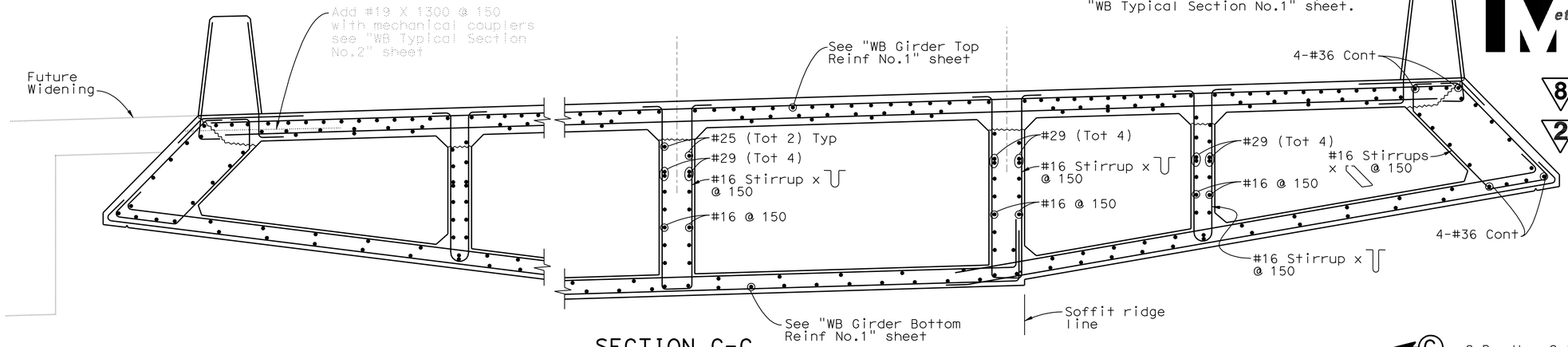

SECTION C-C
1:20

Note: For location of Sections C-C and D-D, see "Bent W10AL Details No.2" sheet.

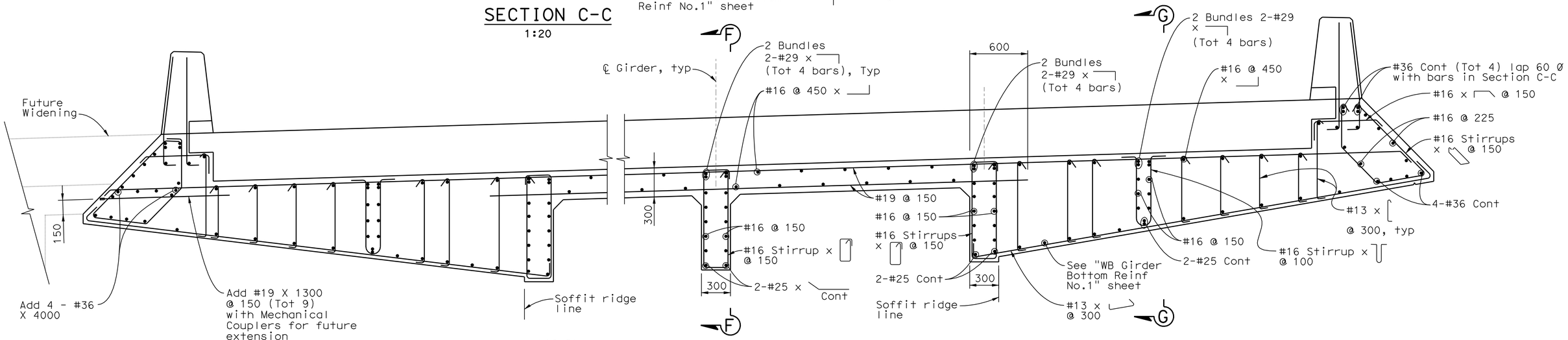

SECTION D-D
1:20

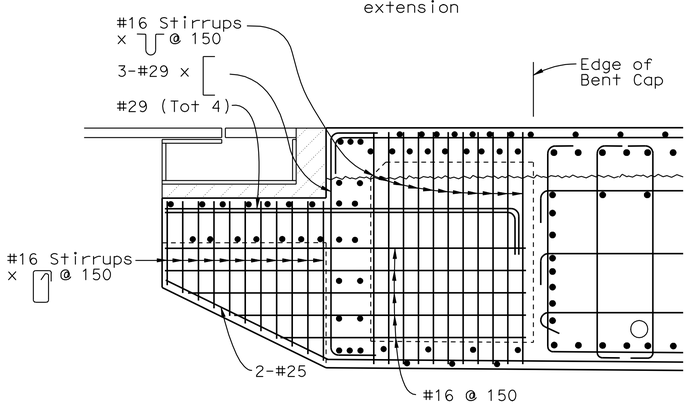

SECTION F-F
1:20

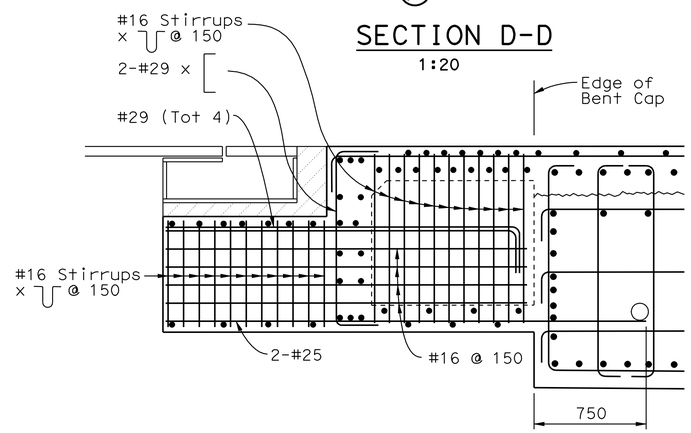

SECTION G-G
1:20

8 REVISED PER ADDENDUM No. 8 DATED NOVEMBER 12, 2009

2 REVISED PER ADDENDUM No. 2 DATED JANUARY 22, 2009

ALL DIMENSIONS ARE IN MILLIMETERS UNLESS OTHERWISE SHOWN

SAN FRANCISCO OAKLAND BAY BRIDGE
EAST SPAN SEISMIC SAFETY PROJECT

YBI TRANSITION STRUCTURES

BENT W10AL DETAILS NO.4

DESIGN OVERSIGHT
JOHN MOOK, BERNARD CHAN, JUAN F. CARPIO
March 3, 2008
SIGN OFF DATE

	BY	CHECKED
DESIGN	Dodd	Desai
DETAILS	van Ryn/Zucchi/Mai	Jain
QUANTITIES	Liao	E. Nichol

PREPARED FOR THE STATE OF CALIFORNIA DEPARTMENT OF TRANSPORTATION

Jal Birdy
PROJECT ENGINEER

BRIDGE NO. 34-0006 L/R
KILOMETER POST 12.8

Rev. Date: 5-18-98

ORIGINAL SCALE IN MILLIMETERS FOR REDUCED PLANS 0 10 20 30 40 50 60 70 80 90 100

CU 04251
EA 0120S1

DISREGARD PRINTS BEARING EARLIER REVISION DATES

REVISION DATES (PRELIMINARY STAGE ONLY) 9/13/07 01/24/08 3/13/08 9/18/08 8/28/09 8/31/09 7/3/06 10/4/06 1/24/07 6/25/07

SHEET 25 OF 209

FILE => 04-0120s1-34-006rl-h-bde108.add

USERNAME => trmikes1 DATE PLOTTED => 09-NOV-2009 TIME PLOTTED => 13:08

DIST.	COUNTY	ROUTE	KILOMETER POST TOTAL PROJECT	SHEET NO.	TOTAL SHEETS
04	SF	80	12.7/13.2	574A	806

REGISTERED ENGINEER - CIVIL

6-23-08
PLANS APPROVAL DATE

REGISTERED PROFESSIONAL ENGINEER A.L. ELY No. 18880 Exp. 6-30-09 CIVIL STATE OF CALIFORNIA

The State of California or its officers or agents shall not be responsible for the accuracy or completeness of electronic copies of this plan sheet.

T.Y. LIN / MOFFATT & NICHOL
TWO HARRISON STREET
SAN FRANCISCO, CA 94105

Caltrans Metric

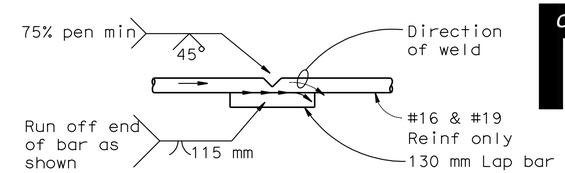

1. Butt weld to be made first
2. Butt weld to be made in flat or horizontal position
3. Lap bar to be centered on splice
4. Flare weld to be made in direction shown
5. Lap bar equal size to spiral bar

VEE GROOVE WELDED SPLICE

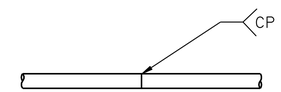

Individual hoops, made continuous with 100% penetration welds, may be substituted for spirals, Hoops shall be same size,spacing,and material as spiral

BUTT WELDED CONTINUOUS HOOP OR SPIRAL

Note: All column spiral and hoop splices shall be ultimate butt splices.

COLUMN SPIRAL AND HOOP SPLICE DETAILS

No Scale

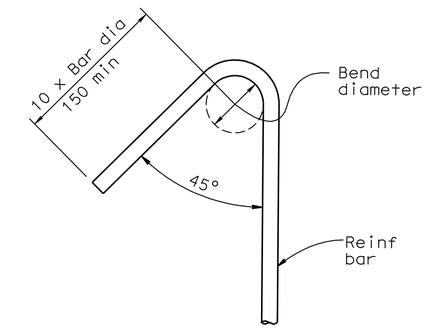

SEISMIC HOOK

No Scale

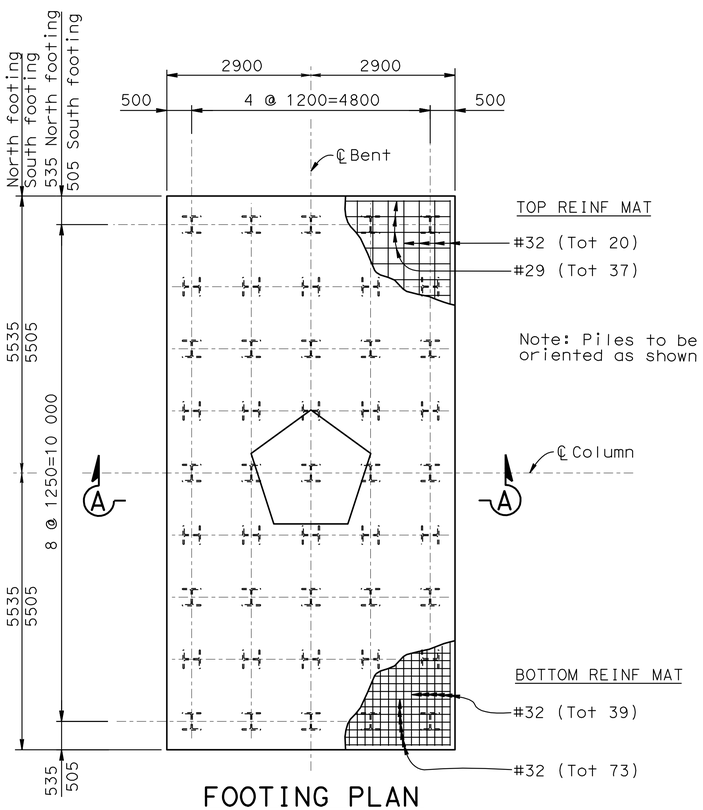

FOOTING PLAN
BENT W10AL NORTH & SOUTH COLUMNS

(North footing shown, south footing similar)
(Tot 45 piles ea footing)
1:60

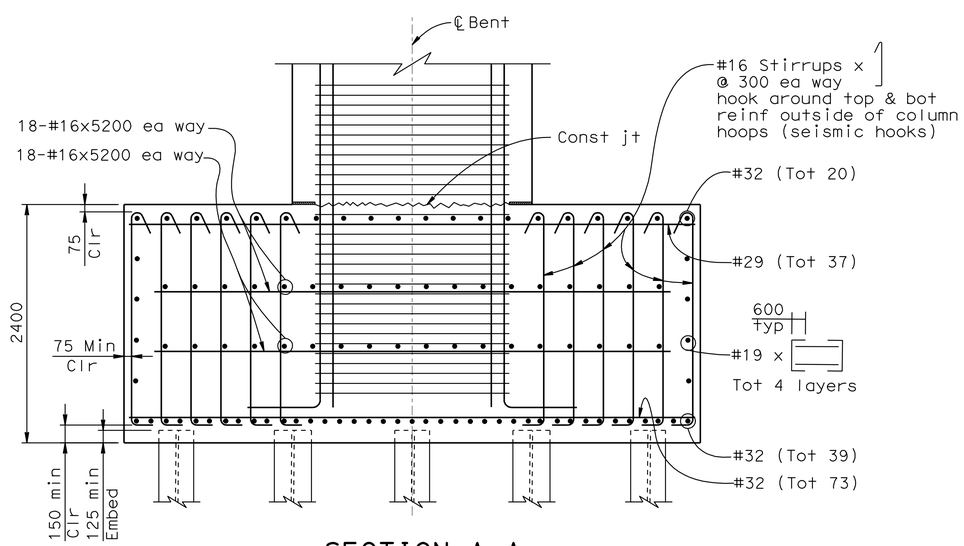

SECTION A-A

1:30

8 **ADDED PER ADDENDUM No. 8 DATED NOVEMBER 12, 2009**

ALL DIMENSIONS ARE IN MILLIMETERS UNLESS OTHERWISE SHOWN

DESIGN OVERSIGHT
JOHN MOOK, BERNARD CHAN, JUAN F. CARPIO
SIGN OFF DATE

	BY	CHECKED
DESIGN	Dodd	Desai
DETAILS	van Ryn/Zucchi/Mai	Jain
QUANTITIES	Liao	E. Nichol

PREPARED FOR THE STATE OF CALIFORNIA DEPARTMENT OF TRANSPORTATION

Jal Birdy
PROJECT ENGINEER

BRIDGE NO. 34-0006 L/R
KILOMETER POST 12.8

SAN FRANCISCO OAKLAND BAY BRIDGE
EAST SPAN SEISMIC SAFETY PROJECT

YBI TRANSITION STRUCTURES

BENT W10AL DETAILS NO.5

Rev. Date: 5-18-98

ORIGINAL SCALE IN MILLIMETERS FOR REDUCED PLANS 0 10 20 30 40 50 60 70 80 90 100

CU 04251
EA 0120S1

DISREGARD PRINTS BEARING EARLIER REVISION DATES 8/19/09

REVISION DATES (PRELIMINARY STAGE ONLY)

SHEET 25A OF 209

FILE => 04-0120s1-34-006rl-h-bdet08a.add

USERNAME => trmikesl DATE PLOTTED => 09-NOV-2009 TIME PLOTTED => 13:08

DIST.	COUNTY	ROUTE	KILOMETER POST TOTAL PROJECT	SHEET NO.	TOTAL SHEETS
04	SF	80	12.7/13.2	575	806

REGISTERED ENGINEER - CIVIL
6-23-08
PLANS APPROVAL DATE

REGISTERED PROFESSIONAL ENGINEER A.L. ELY No. 18880 Exp. 6-30-09 CIVIL STATE OF CALIFORNIA

The State of California or its officers or agents shall not be responsible for the accuracy or completeness of electronic copies of this plan sheet.

T.Y. LIN / MOFFATT & NICHOL
TWO HARRISON STREET
SAN FRANCISCO, CA 94105

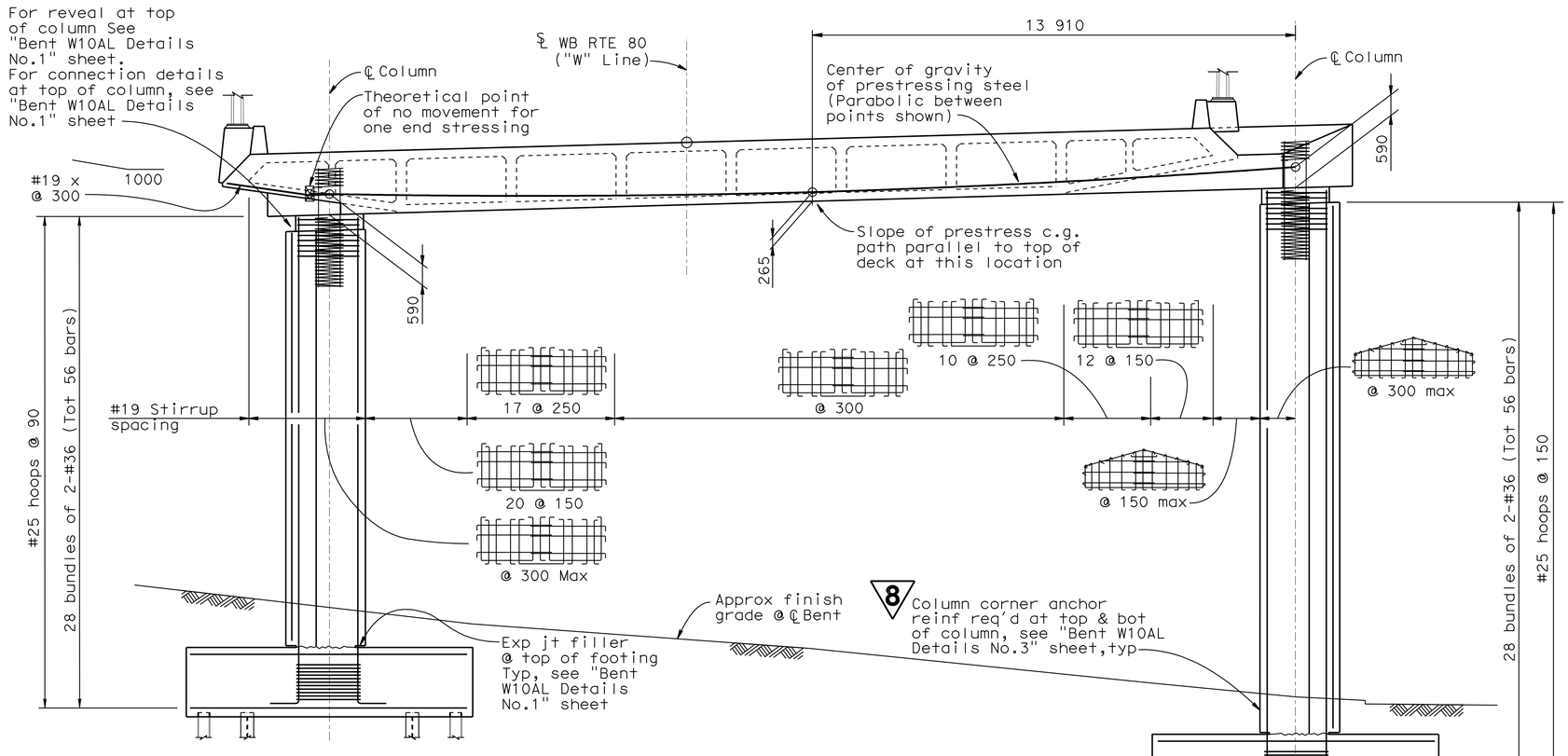

ELEVATION
1:80

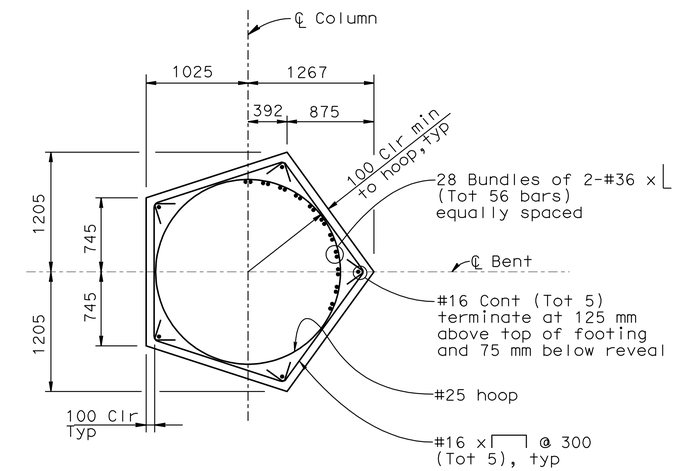

TYPICAL COLUMN SECTION
(South column shown, North column opposite hand)
1:80

NOTE:
Splices not permitted in main column reinf.

8 REVISED PER ADDENDUM No. 8 DATED NOVEMBER 12, 2009

ALL DIMENSIONS ARE IN MILLIMETERS UNLESS OTHERWISE SHOWN

DESIGN OVERSIGHT
JOHN MOOK, BERNARD CHAN, JUAN F. CARPIO
SIGN OFF DATE

Rev. Date: 5-18-98

	BY	CHECKED
DESIGN	Xie/Shangkuan	Ahn
DETAILS	van Ryn/Zucchi/Mai	Jain
QUANTITIES	Liao	E. Nichol

ORIGINAL SCALE IN MILLIMETERS FOR REDUCED PLANS 0 10 20 30 40 50 60 70 80 90 100

PREPARED FOR THE STATE OF CALIFORNIA DEPARTMENT OF TRANSPORTATION

Jal Birdy
PROJECT ENGINEER

BRIDGE NO. 34-0006 L/R
KILOMETER POST 12.8

CU 04251
EA 0120S1

SAN FRANCISCO OAKLAND BAY BRIDGE
EAST SPAN SEISMIC SAFETY PROJECT

YBI TRANSITION STRUCTURES
BENT W10L DETAILS NO.1

DISREGARD PRINTS BEARING EARLIER REVISION DATES
REVISION DATES (PRELIMINARY STAGE ONLY) 9/13/07 01/24/08 3/28/08 8/19/09 5/30/02 2/14/03 3/24/06 10/27/06 1/24/07 6/25/07
SHEET 26 OF 209

FILE => 04-0120s1-34-006rl-h-bdet09.dwg

USERNAME => trmikesl DATE PLOTTED => 09-NOV-2009 TIME PLOTTED => 13:08

DIST.	COUNTY	ROUTE	KILOMETER POST TOTAL PROJECT	SHEET NO.	TOTAL SHEETS
04	SF	80	12.7/13.2	578	806

REGISTERED ENGINEER - CIVIL

6-23-08
PLANS APPROVAL DATE

REGISTERED PROFESSIONAL ENGINEER A.L. ELY No. 18880 Exp. 6-30-09 CIVIL STATE OF CALIFORNIA

The State of California or its officers or agents shall not be responsible for the accuracy or completeness of electronic copies of this plan sheet.

T.Y. LIN / MOFFATT & NICHOL
TWO HARRISON STREET
SAN FRANCISCO, CA 94105

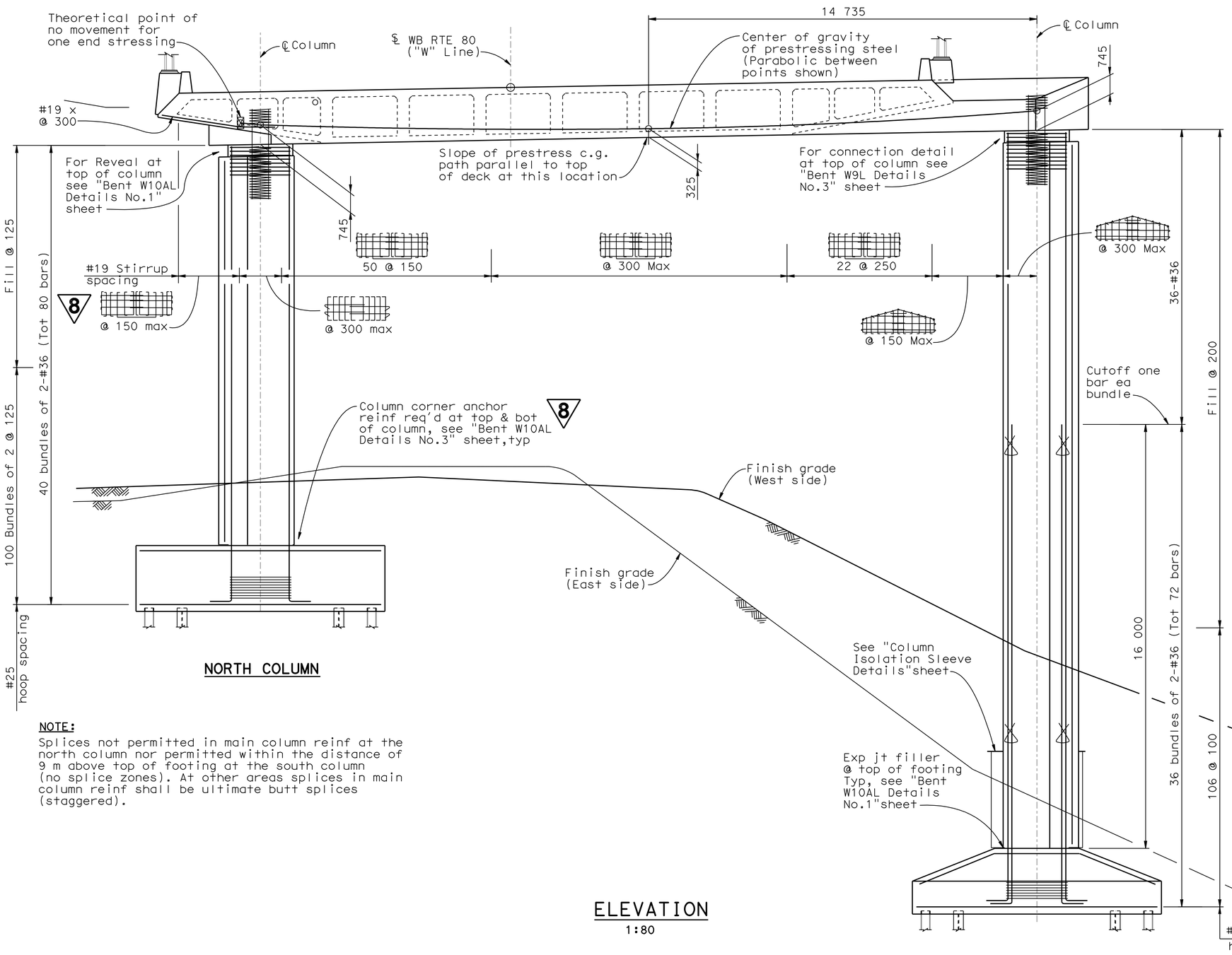

NORTH COLUMN

SOUTH COLUMN

ELEVATION
1:80

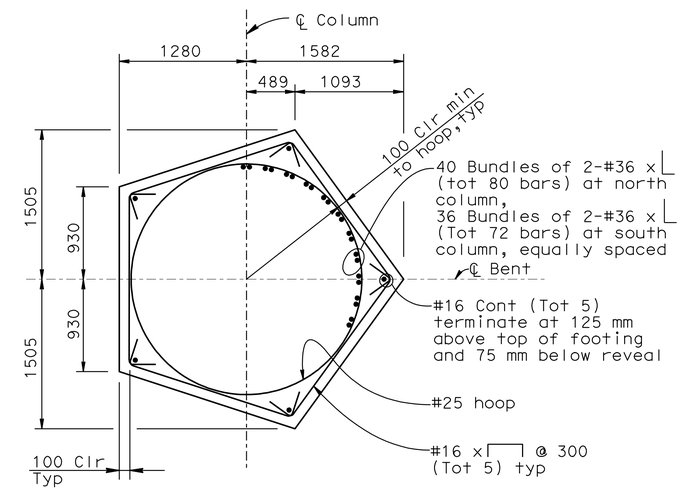

TYPICAL COLUMN SECTION
(South column shown, North column opposite hand)
1:30

NOTE:
Splices not permitted in main column reinf at the north column nor permitted within the distance of 9 m above top of footing at the south column (no splice zones). At other areas splices in main column reinf shall be ultimate butt splices (staggered).

8 **REVISED PER ADDENDUM No. 8 DATED NOVEMBER 12, 2009**

ALL DIMENSIONS ARE IN MILLIMETERS UNLESS OTHERWISE SHOWN

DESIGN OVERSIGHT
JOHN MOOK, BERNARD CHAN, JUAN F. CARPIO
SIGN OFF DATE

Rev. Date: 5-18-98

	BY	CHECKED
DESIGN	Xie/Shangkuan	Ahn
DETAILS	van Ryn/Zucchi/Mai	Jain
QUANTITIES	Liao	E. Nichol

PREPARED FOR THE STATE OF CALIFORNIA DEPARTMENT OF TRANSPORTATION

Jal Birdy
PROJECT ENGINEER

BRIDGE NO. 34-0006 L/R
KILOMETER POST 12.8

SAN FRANCISCO OAKLAND BAY BRIDGE
EAST SPAN SEISMIC SAFETY PROJECT

YBI TRANSITION STRUCTURES

BENT W9L DETAILS NO.1

ORIGINAL SCALE IN MILLIMETERS FOR REDUCED PLANS 0 10 20 30 40 50 60 70 80 90 100

CU 04251
EA 0120S1

DISREGARD PRINTS BEARING EARLIER REVISION DATES

REVISION DATES (PRELIMINARY STAGE ONLY): 9/13/01 01/31/08 3/31/08 5/9/09 8/19/09 2/14/03 7/3/06 10/27/06 1/24/07 6/25/07

SHEET 29 OF 209

FILE => 04-0120s1-34-006rl-h-bdet12.add

USERNAME => trmikest DATE PLOTTED => 09-NOV-2009 TIME PLOTTED => 13:08

DIST.	COUNTY	ROUTE	KILOMETER POST TOTAL PROJECT	SHEET NO.	TOTAL SHEETS
04	SF	80	12.7/13.2	579	806

Caltrans Metric

REGISTERED ENGINEER - CIVIL

6-23-08
PLANS APPROVAL DATE

REGISTERED PROFESSIONAL ENGINEER A.L. ELY No. 18880 Exp. 6-30-09 CIVIL STATE OF CALIFORNIA

The State of California or its officers or agents shall not be responsible for the accuracy or completeness of electronic copies of this plan sheet.

T.Y. LIN / MOFFATT & NICHOL
TWO HARRISON STREET
SAN FRANCISCO, CA 94105

8

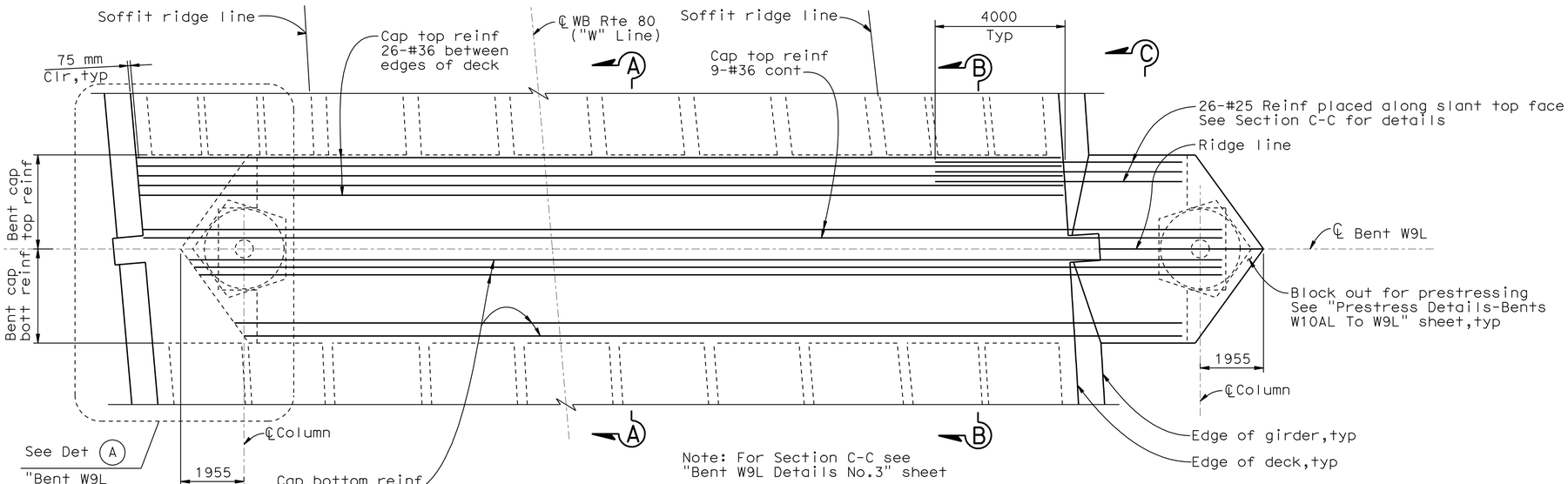

BENT CAP PLAN

1:80

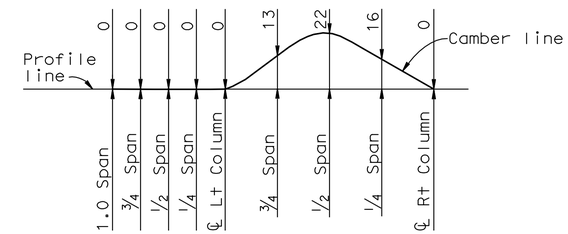

BENT CAP CAMBER DIAGRAM

No scale

Note:
Camber values shown do not include allowance for falsework settlement.

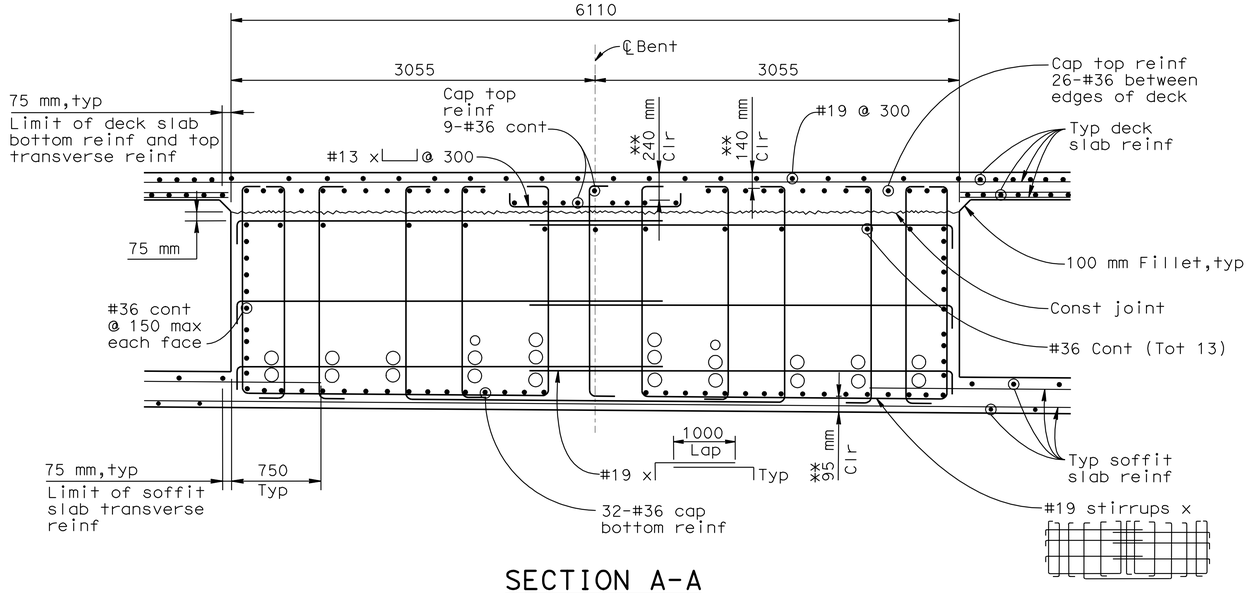

SECTION A-A

1:25

** Indicates clearance to main cap reinf

Note: For details not shown see Section A-A

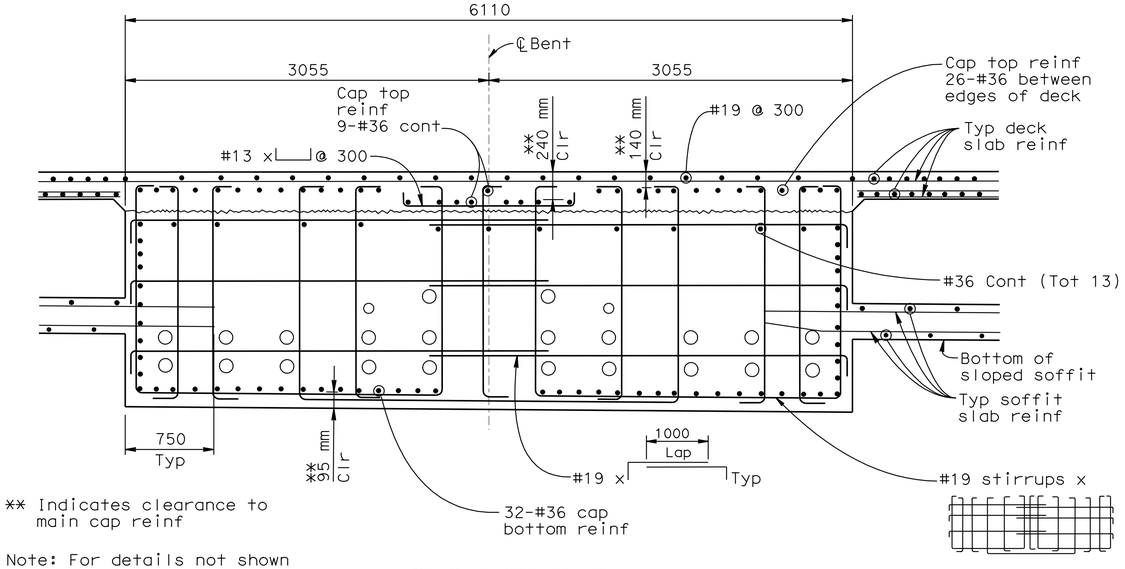

SECTION B-B

1:25

8 **REVISED PER ADDENDUM No. 8 DATED NOVEMBER 12, 2009**

ALL DIMENSIONS ARE IN MILLIMETERS UNLESS OTHERWISE SHOWN

DESIGN OVERSIGHT
JOHN MOOK, BERNARD CHAN, JUAN F. CARPIO
SIGN OFF DATE

	BY	CHECKED
DESIGN	Xie	Ahn
DETAILS	van Ryn/Zucchi/Mai	Jain
QUANTITIES	Liao	E. Nichol

PREPARED FOR THE STATE OF CALIFORNIA DEPARTMENT OF TRANSPORTATION

Jal Birdy
PROJECT ENGINEER

BRIDGE NO. 34-0006 L/R
KILOMETER POST 12.8

SAN FRANCISCO OAKLAND BAY BRIDGE
EAST SPAN SEISMIC SAFETY PROJECT

YBI TRANSITION STRUCTURES

BENT W9L DETAILS NO.2

Rev. Date: 5-18-98

ORIGINAL SCALE IN MILLIMETERS FOR REDUCED PLANS 0 10 20 30 40 50 60 70 80 90 100

CU 04251
EA 0120S1

DISREGARD PRINTS BEARING EARLIER REVISION DATES

REVISION DATES (PRELIMINARY STAGE ONLY) 9/13/01 01/31/08 3/3/08 3/26/02 5/30/02 2/14/05 7/3/06 10/4/06 1/24/07 6/25/07

SHEET 30 OF 209

FILE => 04-0120s1-34-006r1-h-bdet13.add

USERNAME => trmikes1 DATE PLOTTED => 09-NOV-2009 TIME PLOTTED => 13:09

DIST.	COUNTY	ROUTE	KILOMETER POST TOTAL PROJECT	SHEET NO.	TOTAL SHEETS
04	SF	80	12.7/13.2	580	806

Caltrans Metric

REGISTERED ENGINEER - CIVIL

6-23-08
PLANS APPROVAL DATE

REGISTERED PROFESSIONAL ENGINEER A.L. ELY No. 18880 Exp. 6-30-09 CIVIL STATE OF CALIFORNIA

The State of California or its officers or agents shall not be responsible for the accuracy or completeness of electronic copies of this plan sheet.

T.Y. LIN / MOFFATT & NICHOL
TWO HARRISON STREET
SAN FRANCISCO, CA 94105

8

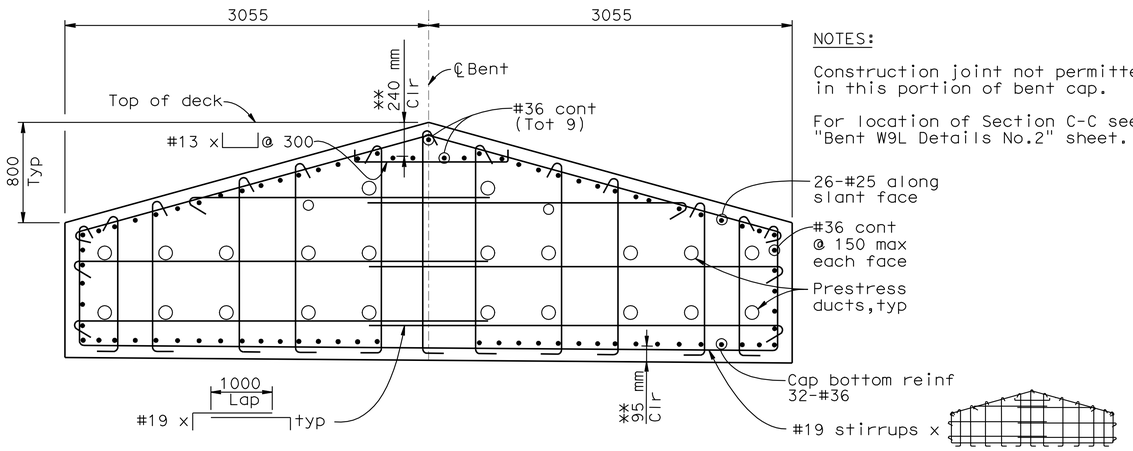

NOTES:

Construction joint not permitted in this portion of bent cap.

For location of Section C-C see "Bent W9L Details No.2" sheet.

SECTION C-C
1:25

** Indicates clearance to main cap reinf

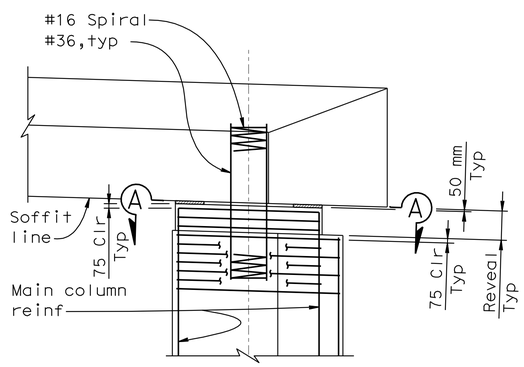

ELEVATION

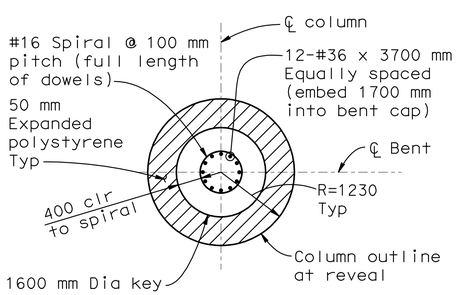

SECTION A-A
(North Column)

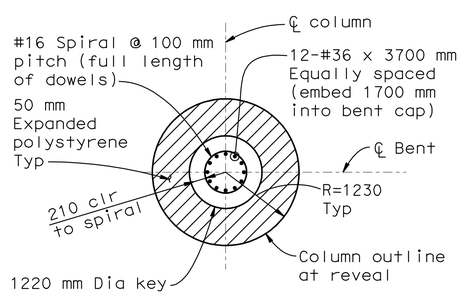

SECTION A-A
(South Column)

CONNECTION DETAIL AT TOP OF COLUMNS
1:50

8 **REVISED PER ADDENDUM No. 8 DATED NOVEMBER 12, 2009**

ALL DIMENSIONS ARE IN MILLIMETERS UNLESS OTHERWISE SHOWN

SAN FRANCISCO OAKLAND BAY BRIDGE
EAST SPAN SEISMIC SAFETY PROJECT

YBI TRANSITION STRUCTURES
BENT W9L DETAILS NO.3

DESIGN OVERSIGHT
JOHN MOOK, BERNARD CHAN, JUAN F. CARPIO

SIGN OFF DATE

	BY	CHECKED
DESIGN	Xie	Ahn
DETAILS	van Ryn/Zucchi/Mai	Jain
QUANTITIES	Liao	E. Nichol

PREPARED FOR THE STATE OF CALIFORNIA DEPARTMENT OF TRANSPORTATION

Jal Birdy
PROJECT ENGINEER

BRIDGE NO. 34-0006 L/R
KILOMETER POST 12.8

Rev. Date: 5-18-98

ORIGINAL SCALE IN MILLIMETERS FOR REDUCED PLANS 0 10 20 30 40 50 60 70 80 90 100

CU 04251
EA 0120S1

DISREGARD PRINTS BEARING EARLIER REVISION DATES

REVISION DATES (PRELIMINARY STAGE ONLY): 9/13/01 01/24/08 3/3/08 3/26/02 5/10/02 2/14/03 7/3/06 10/4/06 1/24/01 6/26/03

SHEET 31 OF 209

FILE => 04-0120s1-34-006rl-h-bdet14.add

USERNAME => trmikesl DATE PLOTTED => 09-NOV-2009 TIME PLOTTED => 13:09

DIST.	COUNTY	ROUTE	KILOMETER POST TOTAL PROJECT	SHEET NO.	TOTAL SHEETS
04	SF	80	12.7/13.2	581A	806

Caltrans Metric

REGISTERED ENGINEER - CIVIL

6-23-08
PLANS APPROVAL DATE

REGISTERED PROFESSIONAL ENGINEER A.L. ELY No. 18880 Exp. 6-30-09 CIVIL STATE OF CALIFORNIA

The State of California or its officers or agents shall not be responsible for the accuracy or completeness of electronic copies of this plan sheet.

T.Y. LIN / MOFFATT & NICHOL
TWO HARRISON STREET
SAN FRANCISCO, CA 94105

8

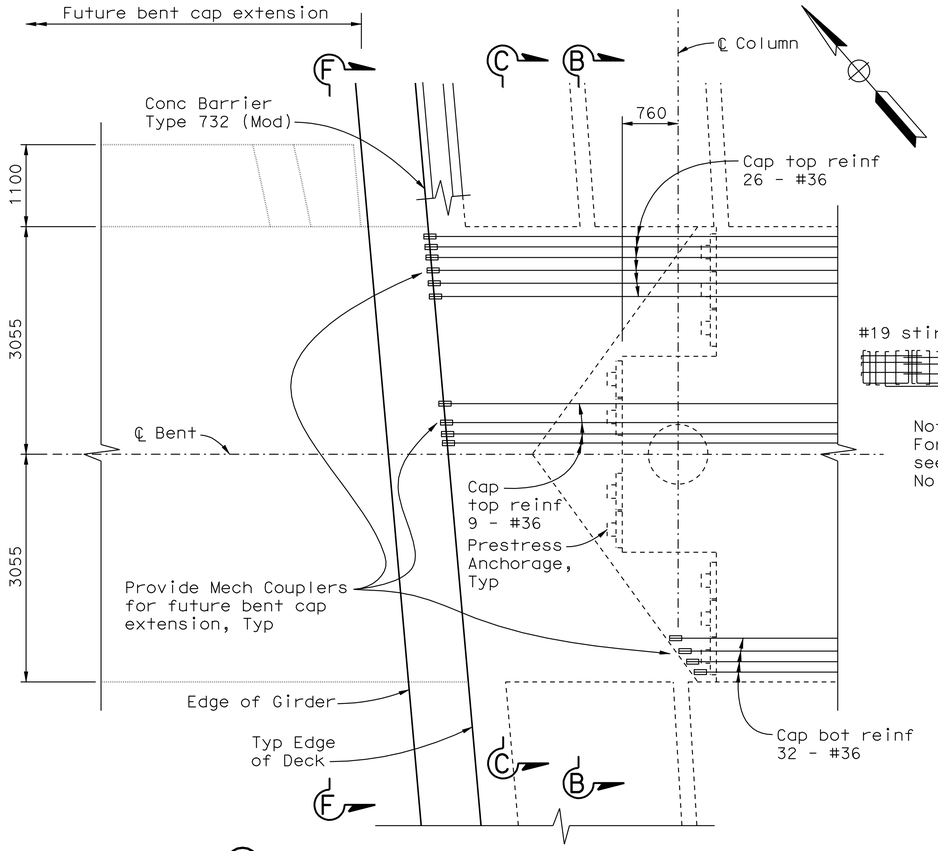

DETAIL Ⓐ - PLAN AT NORTH END OF BENT CAP

1:40

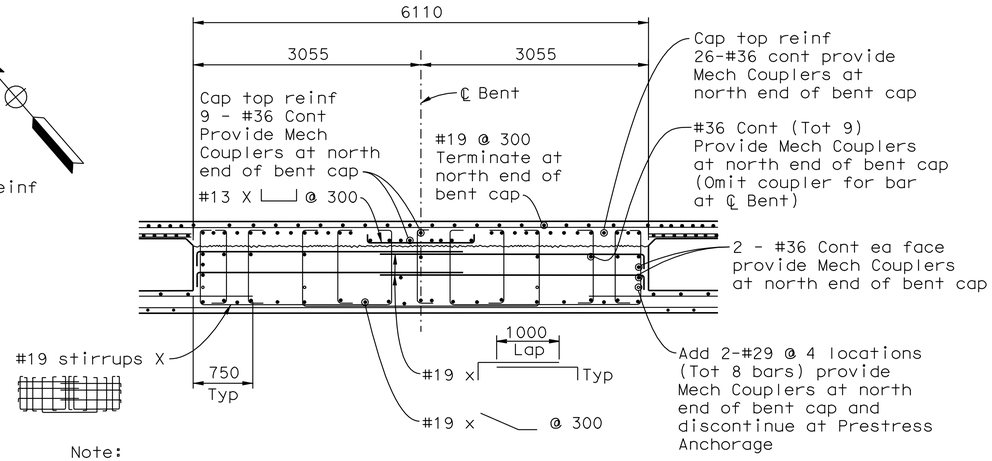

Note:
For details not shown, see "Bent W9L Details No. 2" sheet.

SECTION C-C

1:40

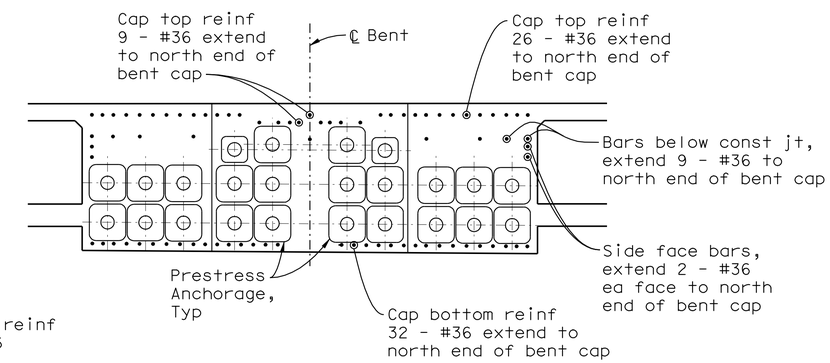

SECTION B-B

1:40

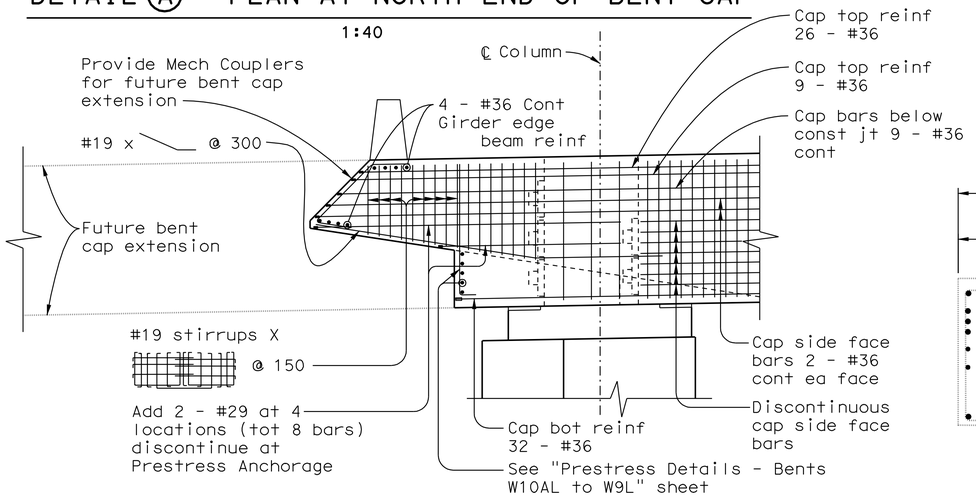

ELEVATION AT NORTH END OF BENT CAP

1:40

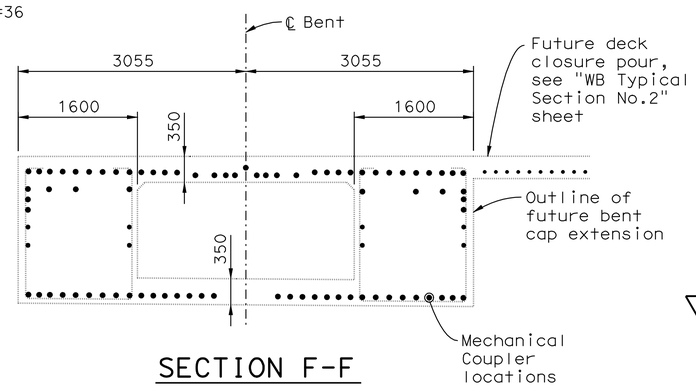

SECTION F-F

1:40

8 **ADDED PER ADDENDUM No. 8 DATED NOVEMBER 12, 2009**

ALL DIMENSIONS ARE IN MILLIMETERS UNLESS OTHERWISE SHOWN

DESIGN OVERSIGHT
JUAN F. CARPIO
SIGN OFF DATE

Rev. Date: 5-18-98

	BY	CHECKED
DESIGN	Xie	Lee
DETAILS	Samson	Jain
QUANTITIES	Jain	Birdy

PREPARED FOR THE STATE OF CALIFORNIA DEPARTMENT OF TRANSPORTATION

Jal Birdy
PROJECT ENGINEER

BRIDGE NO. 34-006 L/R
KILOMETER POST 12.8

SAN FRANCISCO OAKLAND BAY BRIDGE
EAST SPAN SEISMIC SAFETY PROJECT

YBI TRANSITION STRUCTURES

BENT W9L DETAILS NO.5

ORIGINAL SCALE IN MILLIMETERS FOR REDUCED PLANS 0 10 20 30 40 50 60 70 80 90 100

CU 04251
EA 0120S1

DISREGARD PRINTS BEARING EARLIER REVISION DATES 8/19/09

REVISION DATES (PRELIMINARY STAGE ONLY) 8/19/09

SHEET 32A OF 209

FILE => 04-0120s1-34-006rl-h-bdet15a.add

USERNAME => trmikest DATE PLOTTED => 09-NOV-2009 TIME PLOTTED => 13:09

DIST.	COUNTY	ROUTE	KILOMETER POST TOTAL PROJECT	SHEET NO.	TOTAL SHEETS
04	SF	80	12.7/13.2	582	806

REGISTERED ENGINEER - CIVIL

6-23-08
PLANS APPROVAL DATE

REGISTERED PROFESSIONAL ENGINEER A.L. ELY No. 18880 Exp. 6-30-09 CIVIL STATE OF CALIFORNIA

The State of California or its officers or agents shall not be responsible for the accuracy or completeness of electronic copies of this plan sheet.

T.Y. LIN / MOFFATT & NICHOL
TWO HARRISON STREET
SAN FRANCISCO, CA 94105

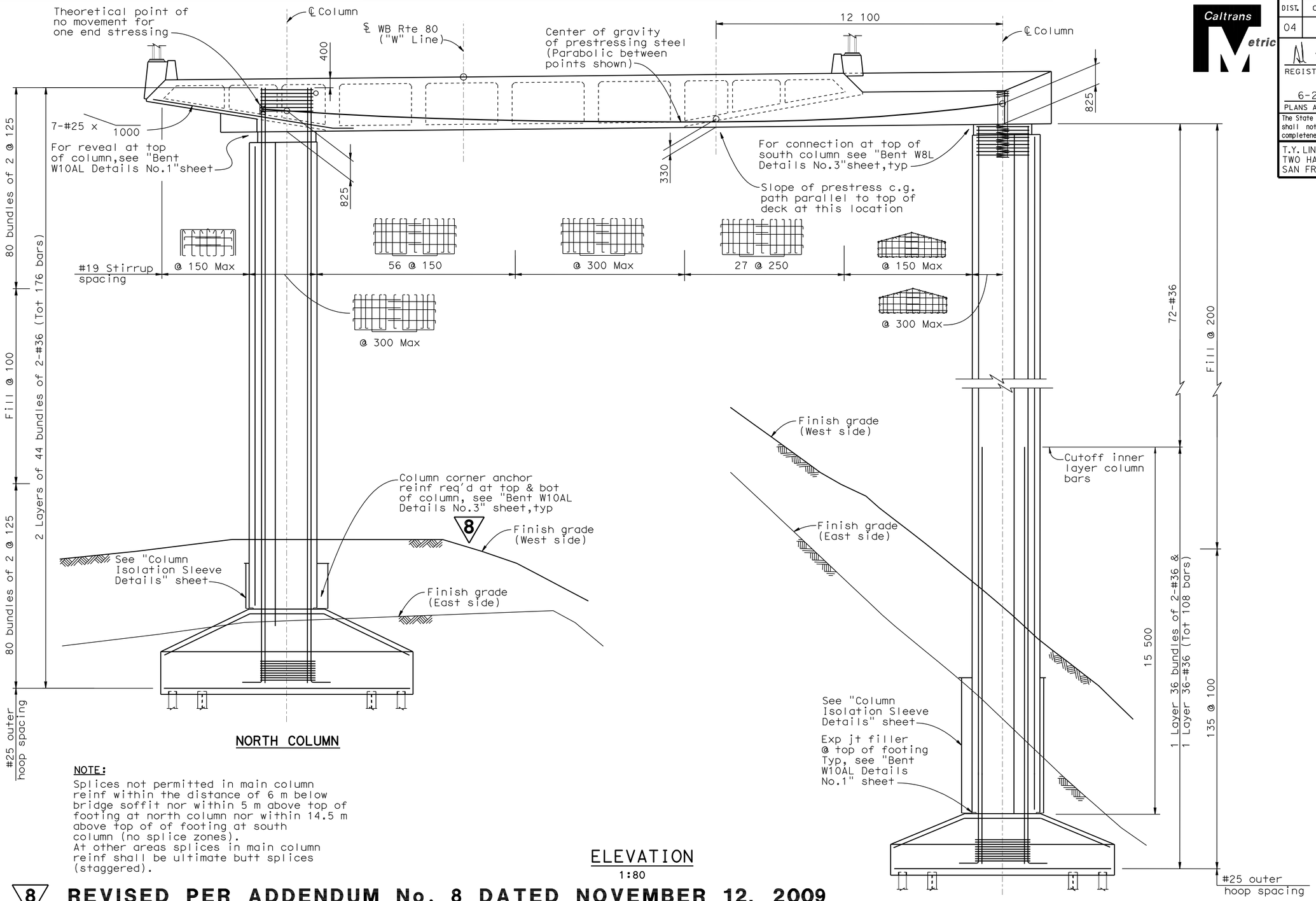

NORTH COLUMN

SOUTH COLUMN

NOTE:
Splices not permitted in main column reinf within the distance of 6 m below bridge soffit nor within 5 m above top of footing at north column nor within 14.5 m above top of of footing at south column (no splice zones).
At other areas splices in main column reinf shall be ultimate butt splices (staggered).

ELEVATION
1:80

8 **REVISED PER ADDENDUM No. 8 DATED NOVEMBER 12, 2009**

ALL DIMENSIONS ARE IN MILLIMETERS UNLESS OTHERWISE SHOWN

DESIGN OVERSIGHT
JOHN MOOK, BERNARD CHAN, JUAN F. CARPIO
March 3, 2008
SIGN OFF DATE

Rev. Date: 5-18-98

	BY	CHECKED
DESIGN	Xie/Shangkuan	Ahn
DETAILS	van Ryn/Zucchi/Mai	Jain
QUANTITIES	Liao	E. Nichol

PREPARED FOR THE STATE OF CALIFORNIA DEPARTMENT OF TRANSPORTATION

Jal Birdy
PROJECT ENGINEER

BRIDGE NO. 34-0006 L/R
KILOMETER POST 12.8

SAN FRANCISCO OAKLAND BAY BRIDGE
EAST SPAN SEISMIC SAFETY PROJECT

YBI TRANSITION STRUCTURES

BENT W8L DETAILS NO.1

ORIGINAL SCALE IN MILLIMETERS FOR REDUCED PLANS 0 10 20 30 40 50 60 70 80 90 100

CU 04251
EA 0120S1

DISREGARD PRINTS BEARING EARLIER REVISION DATES

REVISION DATES (PRELIMINARY STAGE ONLY) 9/13/01 01/31/08 3/31/08 8/19/09 5/30/02 2/24/03 3/31/06 10/27/06 1/24/07 6/25/07

SHEET 33 OF 209

FILE => 04-0120s1-34-006rl-h-bdet16.dgn

USERNAME => trmikesl DATE PLOTTED => 09-NOV-2009 TIME PLOTTED => 13:09

DIST.	COUNTY	ROUTE	KILOMETER POST TOTAL PROJECT	SHEET NO.	TOTAL SHEETS
04	SF	80	12.7/13.2	589	806

Caltrans Metric

REGISTERED ENGINEER - CIVIL

6-23-08
PLANS APPROVAL DATE

REGISTERED PROFESSIONAL ENGINEER A.L. ELY No. 18880 Exp. 6-30-09 CIVIL STATE OF CALIFORNIA

8

The State of California or its officers or agents shall not be responsible for the accuracy or completeness of electronic copies of this plan sheet.

T.Y. LIN / MOFFATT & NICHOL
TWO HARRISON STREET
SAN FRANCISCO, CA 94105

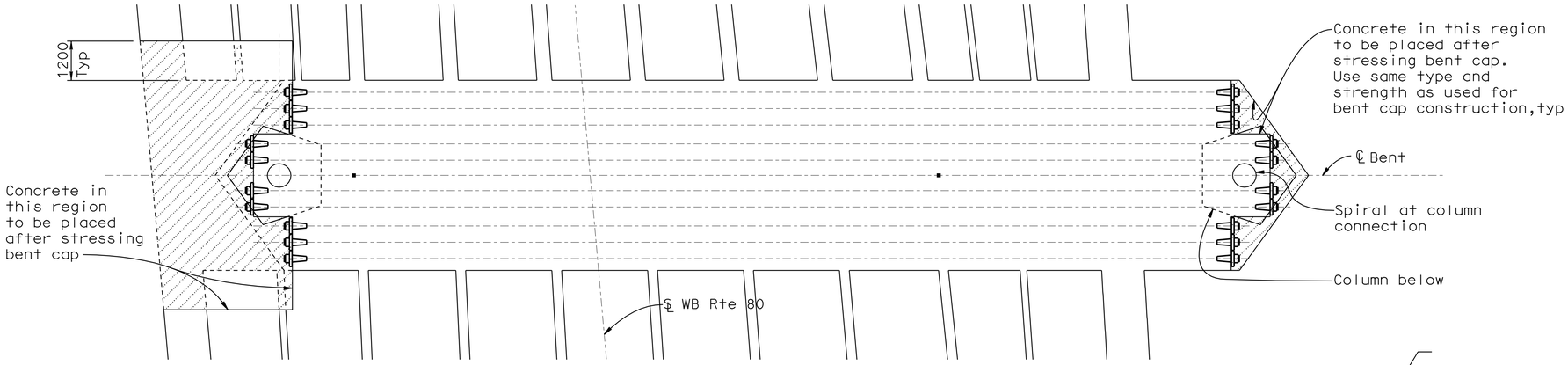

SECTIONAL PLAN BENT W9L

(Similar at Bents W10AL & W10L)

1:80

LEGEND

Concrete to be placed after stressing

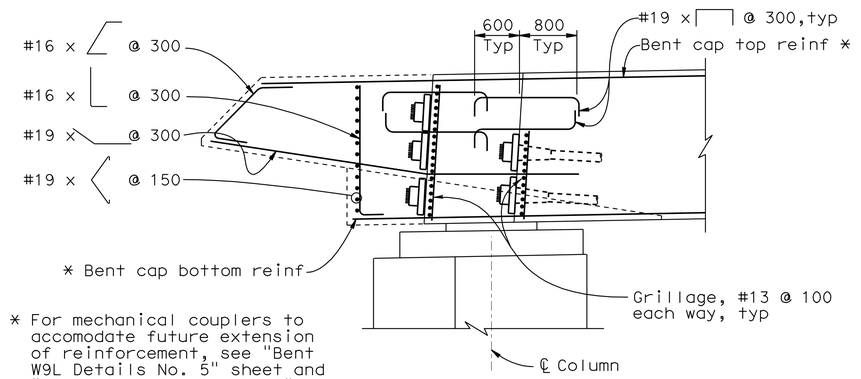

* For mechanical couplers to accomodate future extension of reinforcement, see "Bent W9L Details No. 5" sheet and "WB Typical Section No.2" sheet.

SECTION A-A

1:40

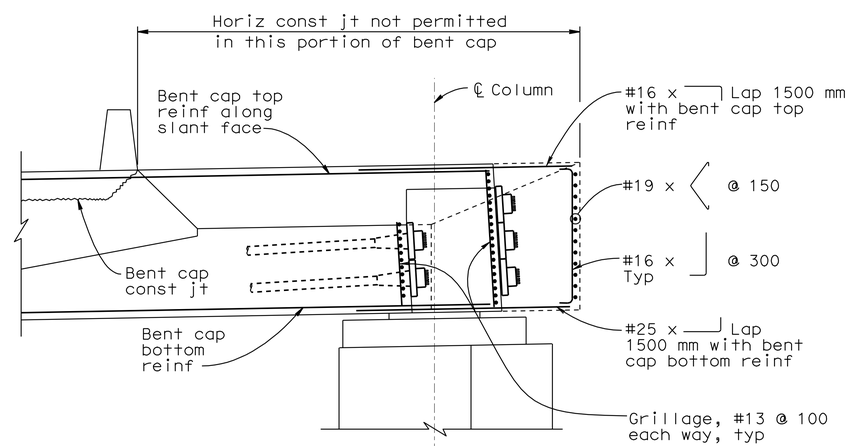

SECTION B-B

1:40

Note: For prestressing notes see "Prestress Details - Bents W8L & W7L" sheet.

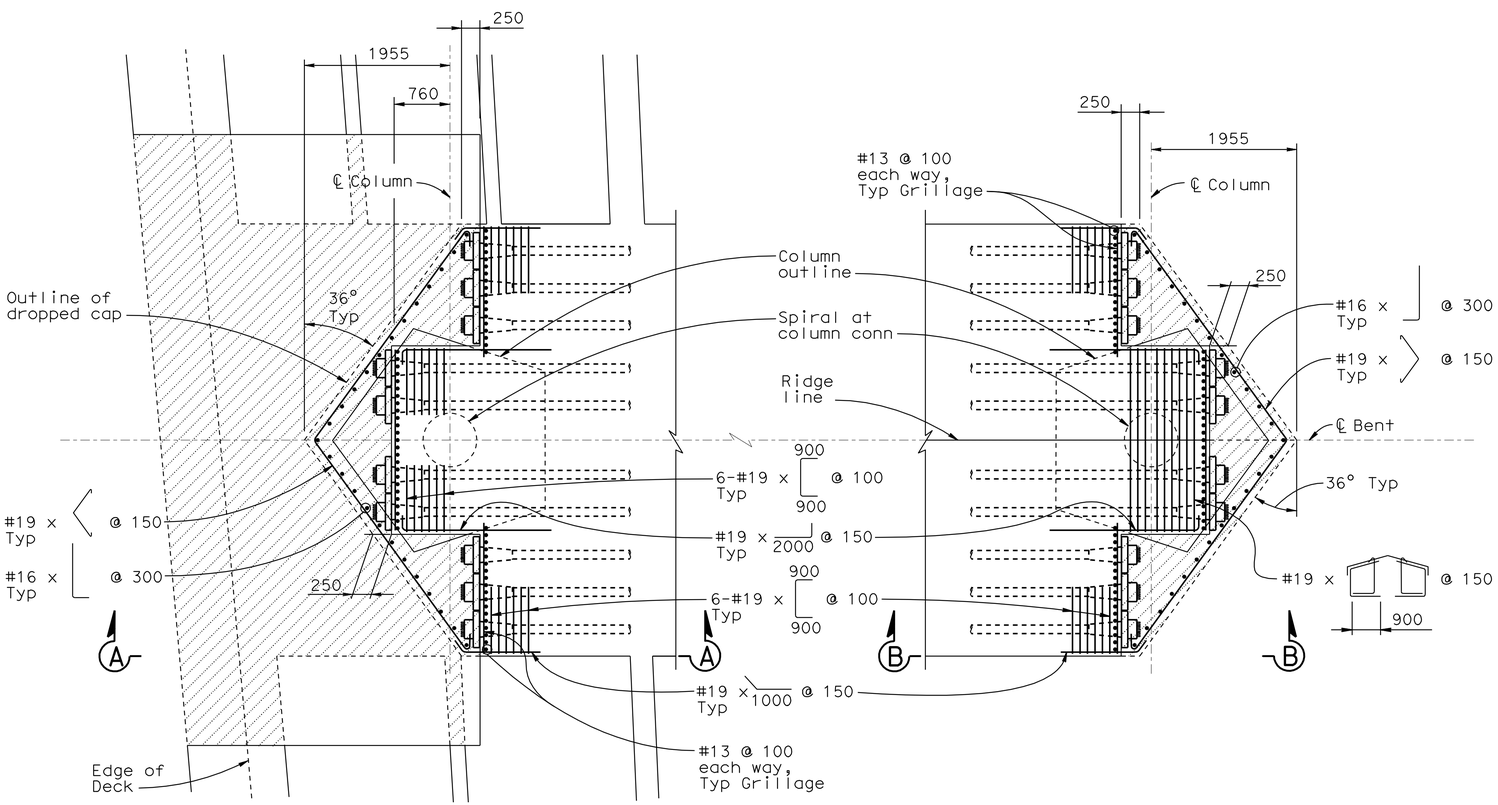

NORTH END OF CAP

SOUTH END OF CAP

PLAN AT BENT CAP PRESTRESS ANCHORAGES

(Bent W9L shown, Bents W10AL & W10L similar)

1:40

8 **REVISED PER ADDENDUM No. 8 DATED NOVEMBER 12, 2009**

ALL DIMENSIONS ARE IN MILLIMETERS UNLESS OTHERWISE SHOWN

DESIGN OVERSIGHT
JOHN MOOK, BERNARD CHAN, JUAN F. CARPIO
SIGN OFF DATE

Rev. Date: 5-18-98

	BY	CHECKED
DESIGN	Xie	Ahn
DETAILS	van Ryn/Zucchi/Mai	Jain
QUANTITIES	Liao	E. Nichol

PREPARED FOR THE STATE OF CALIFORNIA DEPARTMENT OF TRANSPORTATION

Jal Birdy
PROJECT ENGINEER

BRIDGE NO. 34-0006 L/R
KILOMETER POST 12.8

CU 04251
EA 0120S1

ORIGINAL SCALE IN MILLIMETERS FOR REDUCED PLANS 0 10 20 30 40 50 60 70 80 90 100

DISREGARD PRINTS BEARING EARLIER REVISION DATES

REVISION DATES (PRELIMINARY STAGE ONLY): 9/13/07 01/31/08 3/31/08 5/22/09 8/18/09 8/31/09 1/3/06 10/27/06 1/24/07 6/25/07

SHEET 40 OF 209

SAN FRANCISCO OAKLAND BAY BRIDGE
EAST SPAN SEISMIC SAFETY PROJECT

YBI TRANSITION STRUCTURES

PRESTRESS DETAILS - BENTS W10AL TO W9L

FILE => 04-0120s1-34-006r1-h-bdet23.add

USERNAME => trmikest DATE PLOTTED => 09-NOV-2009 TIME PLOTTED => 13:10

DIST.	COUNTY	ROUTE	KILOMETER POST TOTAL PROJECT	SHEET NO.	TOTAL SHEETS
04	SF	80	12.7/13.2	591	806

Caltrans Metric

REGISTERED ENGINEER - CIVIL

6-23-08
PLANS APPROVAL DATE

REGISTERED PROFESSIONAL ENGINEER A.L. ELY No. 18880 Exp. 6-30-09 CIVIL STATE OF CALIFORNIA

The State of California or its officers or agents shall not be responsible for the accuracy or completeness of electronic copies of this plan sheet.

T.Y. LIN / MOFFATT & NICHOL
TWO HARRISON STREET
SAN FRANCISCO, CA 94105

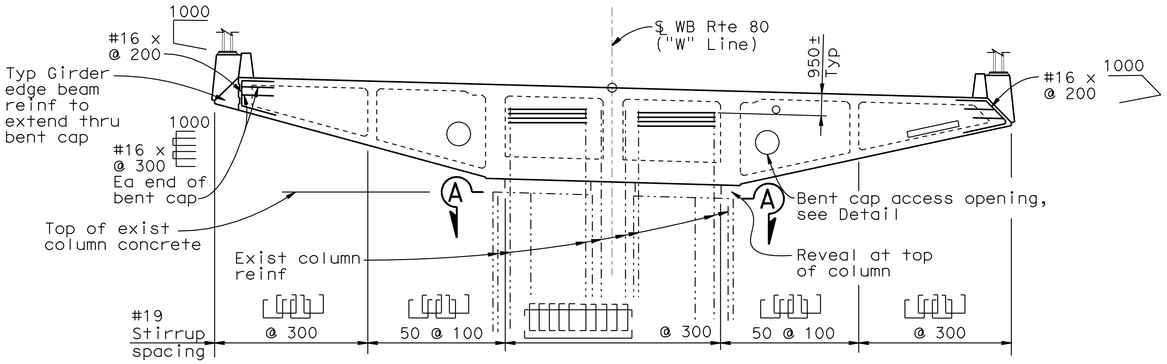

ELEVATION
1:100

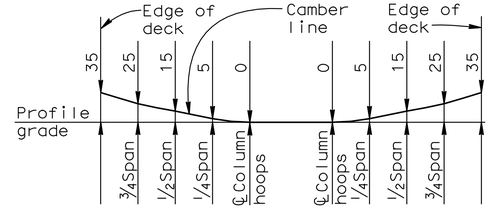

BENT CAP CAMBER DIAGRAM
NO SCALE

Note: Camber diagram does not include allowance for falsework settlement

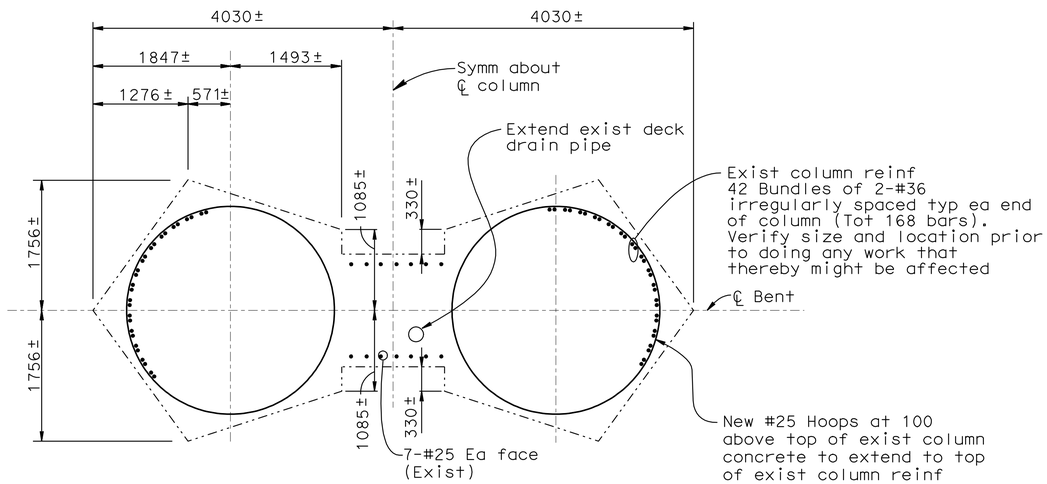

SECTION A-A
1:40

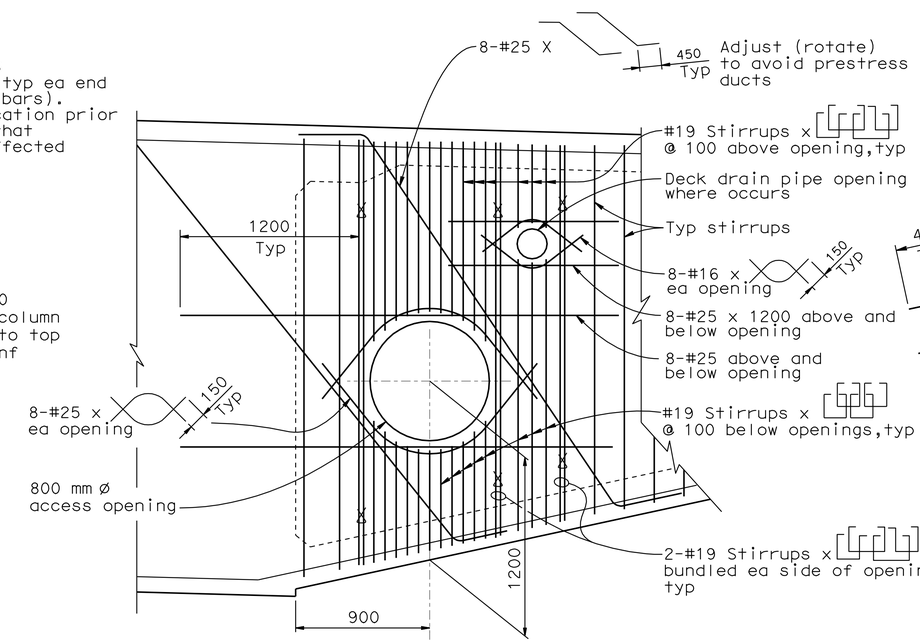

BENT CAP ACCESS OPENING
1:20

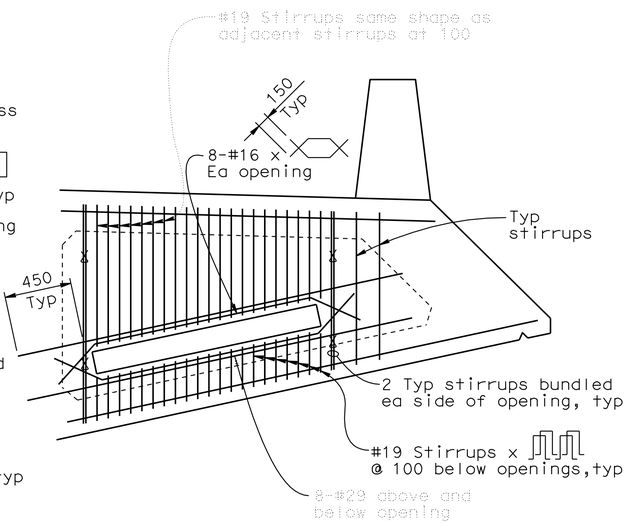

Note:
Where top layer of longit soffit reinf conflicts with opening, bend x to clear opening.

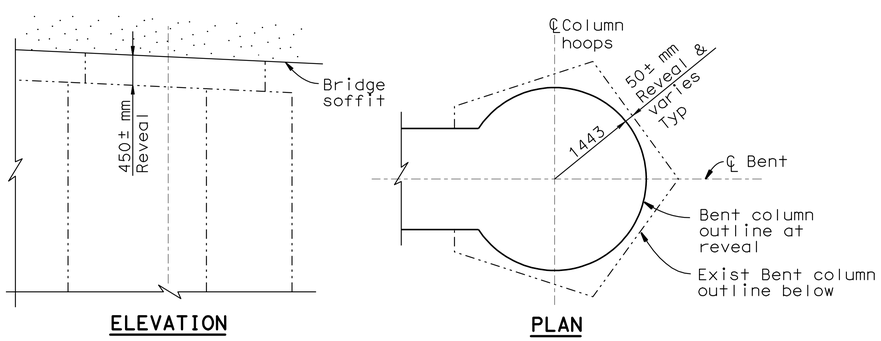

REVEAL DETAIL AT TOP OF COLUMN
(Typical Bents W6L & W5L)
NO SCALE

8 REVISED PER ADDENDUM No. 8 DATED NOVEMBER 12, 2009

ALL DIMENSIONS ARE IN MILLIMETERS UNLESS OTHERWISE SHOWN

DESIGN OVERSIGHT
JOHN MOOK, BERNARD CHAN, JUAN F. CARPIO
SIGN OFF DATE

	BY	CHECKED
DESIGN	Shangkuan	Ahn
DETAILS	van Ryn/Zucchi/Mai	Jain
QUANTITIES	Liao	E. Nichol

PREPARED FOR THE STATE OF CALIFORNIA DEPARTMENT OF TRANSPORTATION

Jal Birdy
PROJECT ENGINEER

BRIDGE NO. 34-0006 L/R
KILOMETER POST 12.8

SAN FRANCISCO OAKLAND BAY BRIDGE
EAST SPAN SEISMIC SAFETY PROJECT

YBI TRANSITION STRUCTURES

BENT W6L DETAILS NO.1

Rev. Date: 5-18-98

ORIGINAL SCALE IN MILLIMETERS FOR REDUCED PLANS 0 10 20 30 40 50 60 70 80 90 100

CU 04251
EA 0120S1

DISREGARD PRINTS BEARING EARLIER REVISION DATES

REVISION DATES (PRELIMINARY STAGE ONLY): 9/13/07 01/31/08 3/3/08 5/22/09 8/31/09 2/14/05 7/3/06 10/4/06 1/24/07 6/25/07

SHEET 42 OF 209

FILE => 04-0120s1-34-006rl-h-bdet25.add

USERNAME => trmikesl DATE PLOTTED => 09-NOV-2009 TIME PLOTTED => 13:10

DIST.	COUNTY	ROUTE	KILOMETER POST TOTAL PROJECT	SHEET NO.	TOTAL SHEETS
04	SF	80	12.7/13.2	591A	806

REGISTERED ENGINEER - CIVIL

6-23-08
PLANS APPROVAL DATE

REGISTERED PROFESSIONAL ENGINEER A.L. ELY No. 18880 Exp. 6-30-09 CIVIL STATE OF CALIFORNIA

The State of California or its officers or agents shall not be responsible for the accuracy or completeness of electronic copies of this plan sheet.

T.Y. LIN / MOFFATT & NICHOL
TWO HARRISON STREET
SAN FRANCISCO, CA 94105

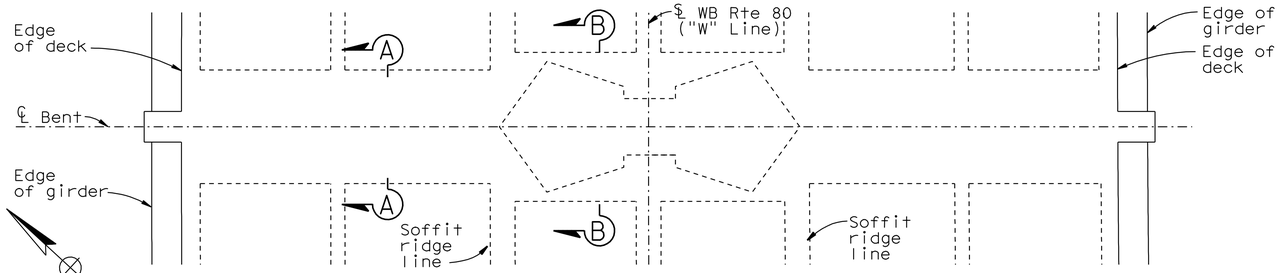

BENT CAP PLAN
1:80

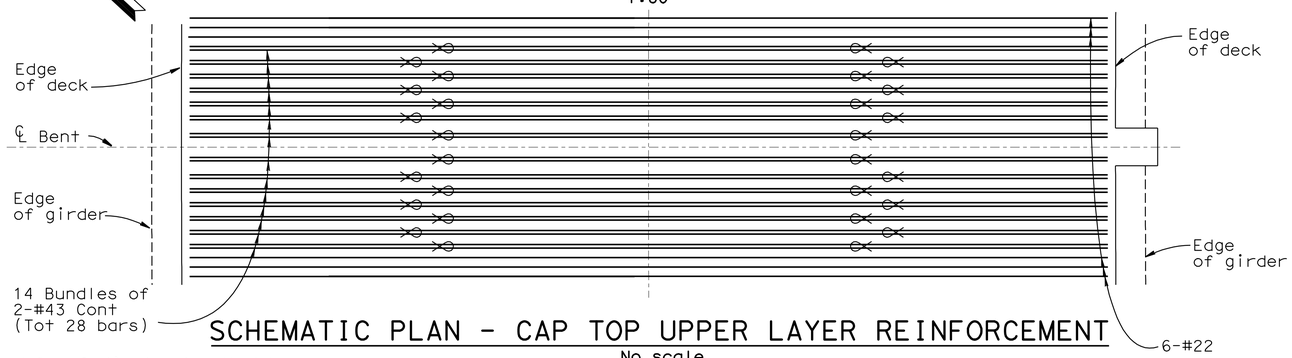

SCHEMATIC PLAN - CAP TOP UPPER LAYER REINFORCEMENT
No scale

Indicates bundled bars

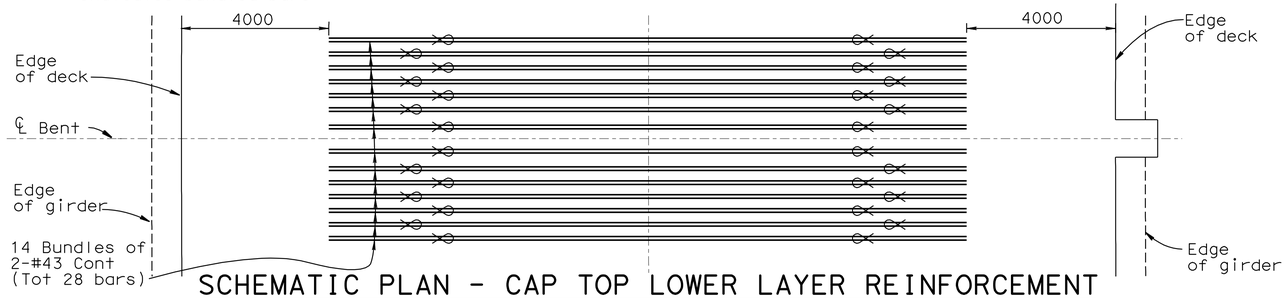

SCHEMATIC PLAN - CAP TOP LOWER LAYER REINFORCEMENT
No scale

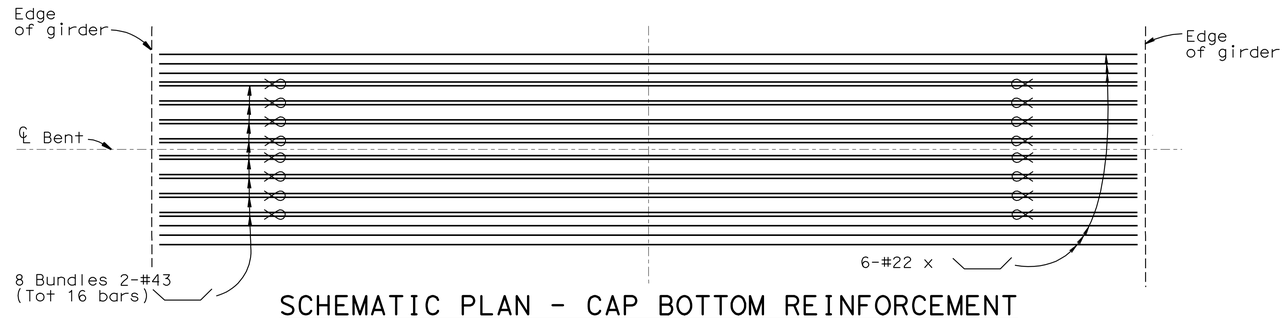

SCHEMATIC PLAN - CAP BOTTOM REINFORCEMENT
No scale

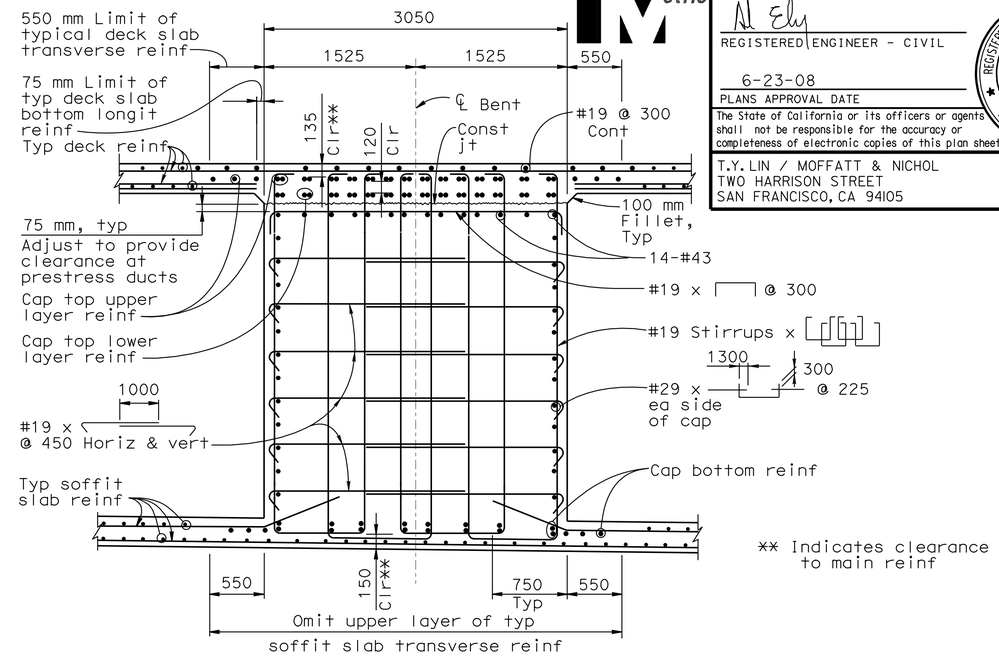

** Indicates clearance to main reinf

SECTION A-A
1:30

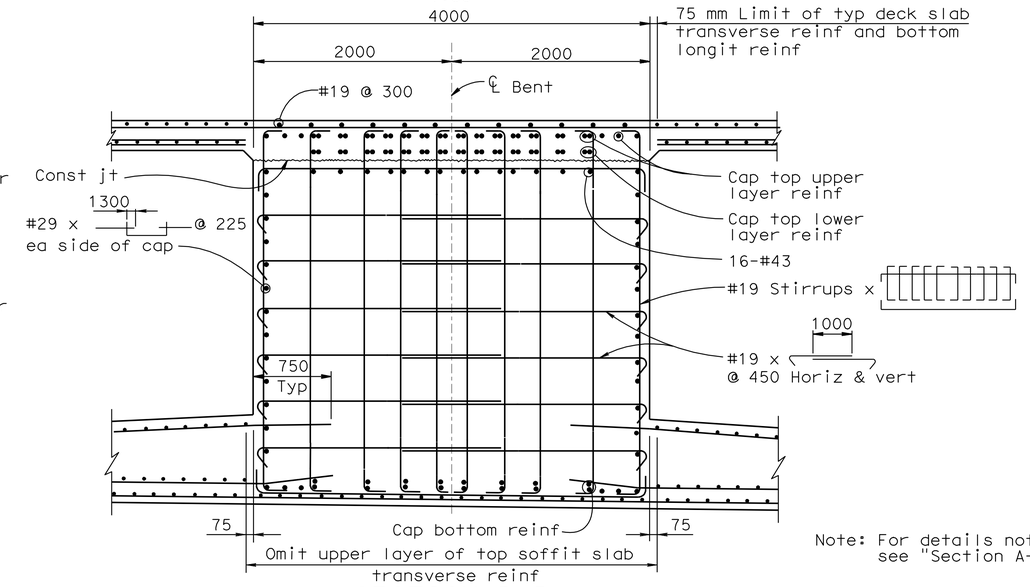

Note: For details not shown, see "Section A-A"

SECTION B-B
1:30

8 ADDED PER ADDENDUM No. 8 DATED NOVEMBER 12, 2009

ALL DIMENSIONS ARE IN MILLIMETERS UNLESS OTHERWISE SHOWN

DESIGN OVERSIGHT
JOHN MOOK, BERNARD CHAN, JUAN F. CARPIO
SIGN OFF DATE

	BY	CHECKED
DESIGN	Wang	Greer
DETAILS	van Ryn/Zucchi/Mai	Jain
QUANTITIES	Liao	E. Nichol

PREPARED FOR THE STATE OF CALIFORNIA DEPARTMENT OF TRANSPORTATION

Jal Birdy
PROJECT ENGINEER

BRIDGE NO. 34-0006 L/R
KILOMETER POST 12.8

SAN FRANCISCO OAKLAND BAY BRIDGE
EAST SPAN SEISMIC SAFETY PROJECT

YBI TRANSITION STRUCTURES
BENT W6L DETAILS NO.2

Rev. Date: 5-18-98

ORIGINAL SCALE IN MILLIMETERS FOR REDUCED PLANS 0 10 20 30 40 50 60 70 80 90 100

CU 04251
EA 0120S1

DISREGARD PRINTS BEARING EARLIER REVISION DATES

REVISION DATES (PRELIMINARY STAGE ONLY): 9/13/07 01/23/08 3/28/08 5/22/09 8/31/09 2/14/03 3/24/06 10/24/06 1/24/07 6/28/07

SHEET 42A OF 209

FILE => 04-0120s1-34-006rl-h-bdet25a.add

USERNAME => trmikesl DATE PLOTTED => 09-NOV-2009 TIME PLOTTED => 13:10

DIST.	COUNTY	ROUTE	KILOMETER POST TOTAL PROJECT	SHEET NO.	TOTAL SHEETS
04	SF	80	12.7/13.2	592	806

REGISTERED ENGINEER - CIVIL

6-23-08
PLANS APPROVAL DATE

REGISTERED PROFESSIONAL ENGINEER A.L. ELY No. 18880 Exp. 6-30-09 CIVIL STATE OF CALIFORNIA

The State of California or its officers or agents shall not be responsible for the accuracy or completeness of electronic copies of this plan sheet.

T.Y. LIN / MOFFATT & NICHOL
TWO HARRISON STREET
SAN FRANCISCO, CA 94105

Caltrans Metric

8

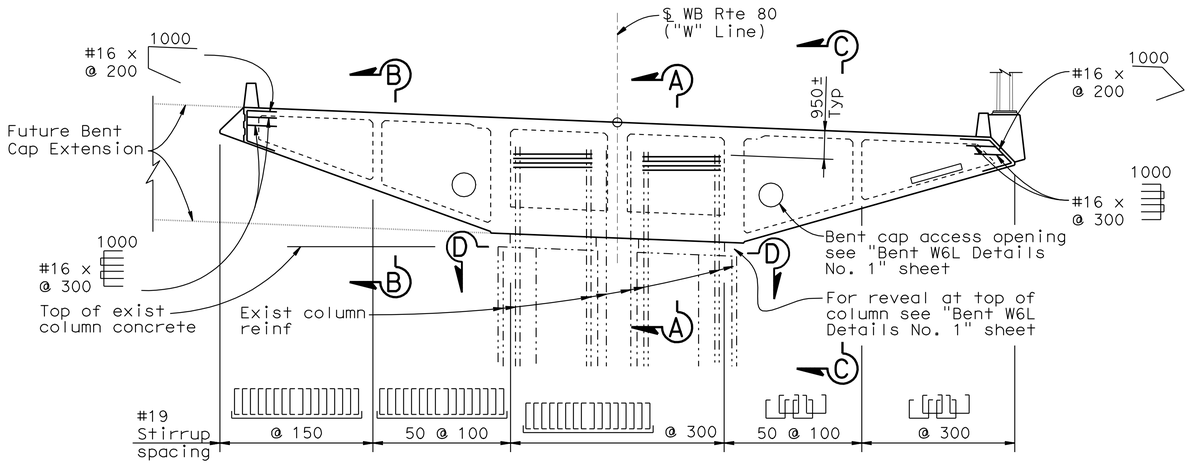

ELEVATION
1:100

Note: For Section B-B, see "Bent W5L Details No. 2" sheet.

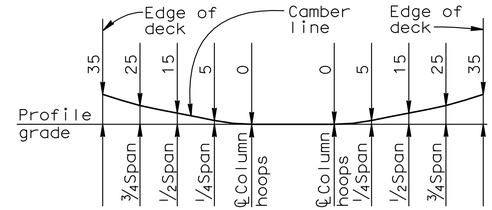

Note: Camber diagram does not include allowance for falsework settlement

BENT CAP CAMBER DIAGRAM
NO SCALE

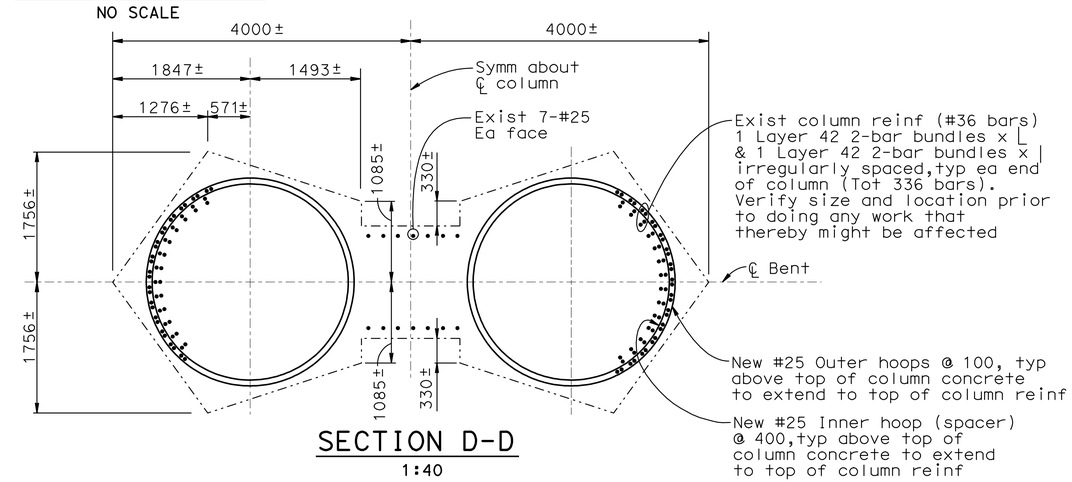

SECTION D-D
1:40

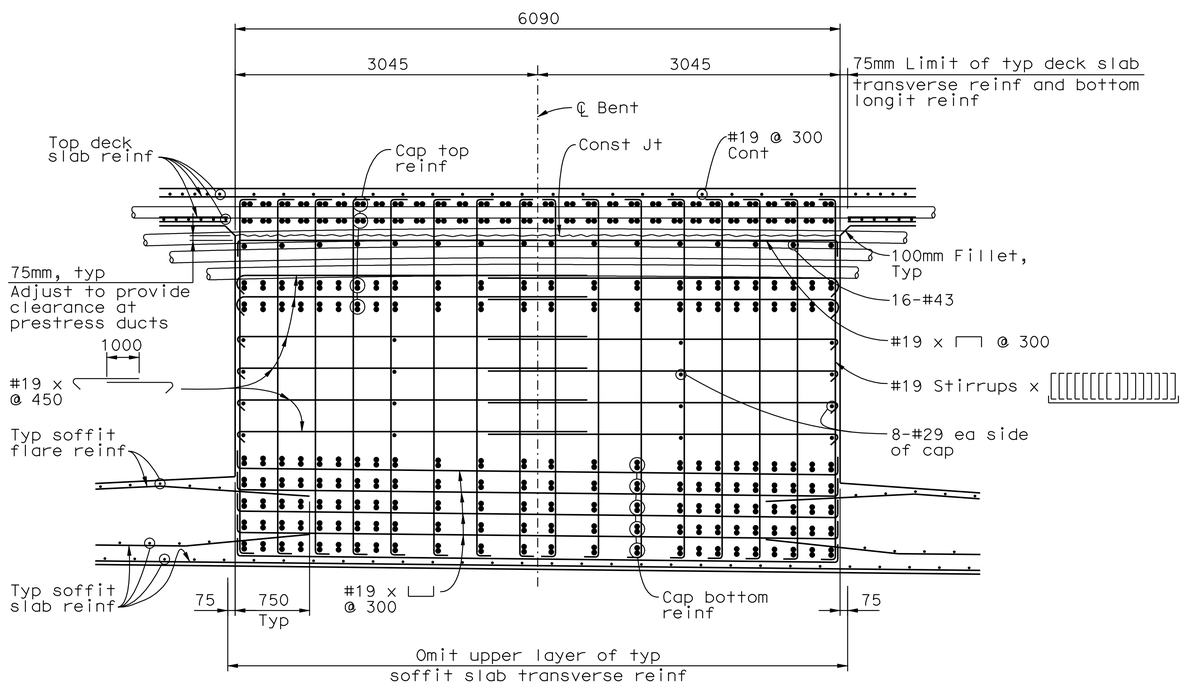

SECTION A-A
1:30

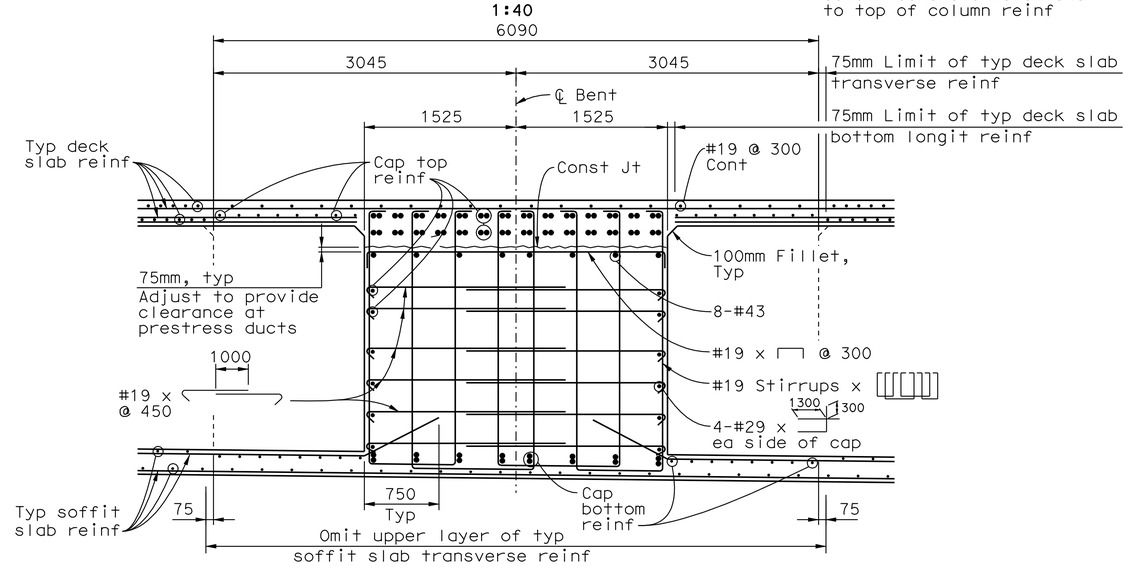

SECTION C-C
1:30

8 **REVISED PER ADDENDUM No. 8 DATED NOVEMBER 12, 2009**

ALL DIMENSIONS ARE IN MILLIMETERS UNLESS OTHERWISE SHOWN

DESIGN OVERSIGHT
JOHN MOOK, BERNARD CHAN, JUAN F. CARPIO
SIGN OFF DATE

Rev. Date: 5-18-98

	BY	CHECKED
DESIGN	Darrah/Shankuan	Ahn
DETAILS	van Ryn/Zucchi/Mai	Jain
QUANTITIES	Liao	E. Nichol

PREPARED FOR THE STATE OF CALIFORNIA DEPARTMENT OF TRANSPORTATION

Jal Birdy
PROJECT ENGINEER

BRIDGE NO. 34-0006 L/R
KILOMETER POST 12.8

SAN FRANCISCO OAKLAND BAY BRIDGE
EAST SPAN SEISMIC SAFETY PROJECT

YBI TRANSITION STRUCTURES
BENT W5L DETAILS NO.1

ORIGINAL SCALE IN MILLIMETERS FOR REDUCED PLANS 0 10 20 30 40 50 60 70 80 90 100

CU 04251
EA 0120S1

DISREGARD PRINTS BEARING EARLIER REVISION DATES

REVISION DATES (PRELIMINARY STAGE ONLY): 9/13/07 01/24/08 3/24/08 4/3/09 8/18/09 8/31/09 3/3/06 10/2/06 1/24/07 6/28/07

SHEET 43 OF 209

FILE => 04-0120s1-34-006ri-h-bdet26.add

USERNAME => trmikest DATE PLOTTED => 09-NOV-2009 TIME PLOTTED => 13:10

DIST.	COUNTY	ROUTE	KILOMETER POST TOTAL PROJECT	SHEET NO.	TOTAL SHEETS
04	SF	80	12.7/13.2	593	806

Caltrans Metric

REGISTERED ENGINEER - CIVIL

PLANS APPROVAL DATE

REGISTERED PROFESSIONAL ENGINEER A.L. ELY No. 18880 Exp. 6-30-09 CIVIL STATE OF CALIFORNIA

The State of California or its officers or agents shall not be responsible for the accuracy or completeness of electronic copies of this plan sheet.

T.Y. LIN / MOFFATT & NICHOL
TWO HARRISON STREET
SAN FRANCISCO, CA 94105

8

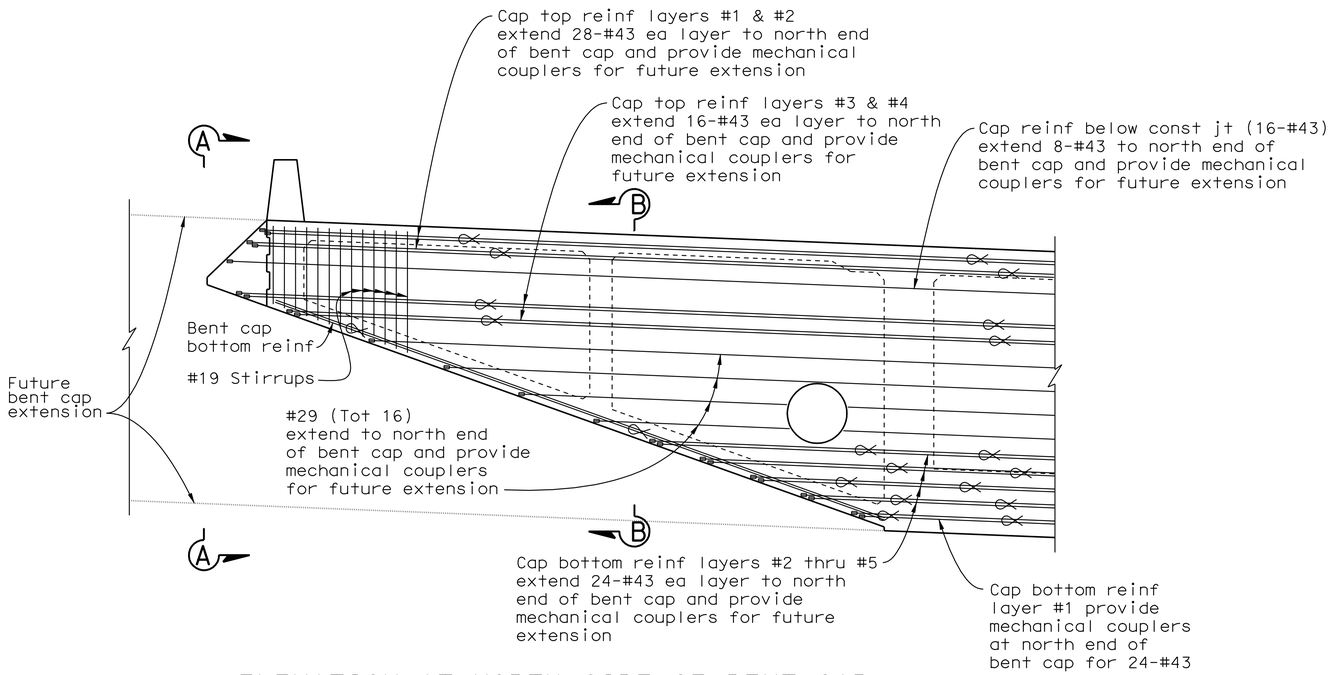

ELEVATION AT NORTH SIDE OF BENT CAP

1:40

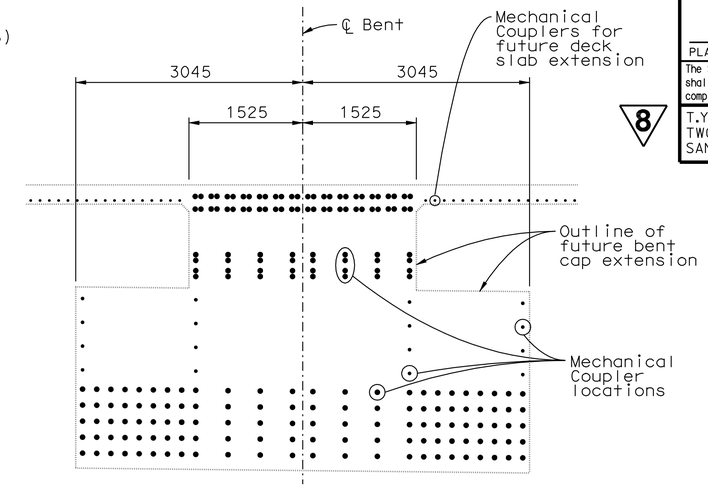

SECTION A-A

1:40

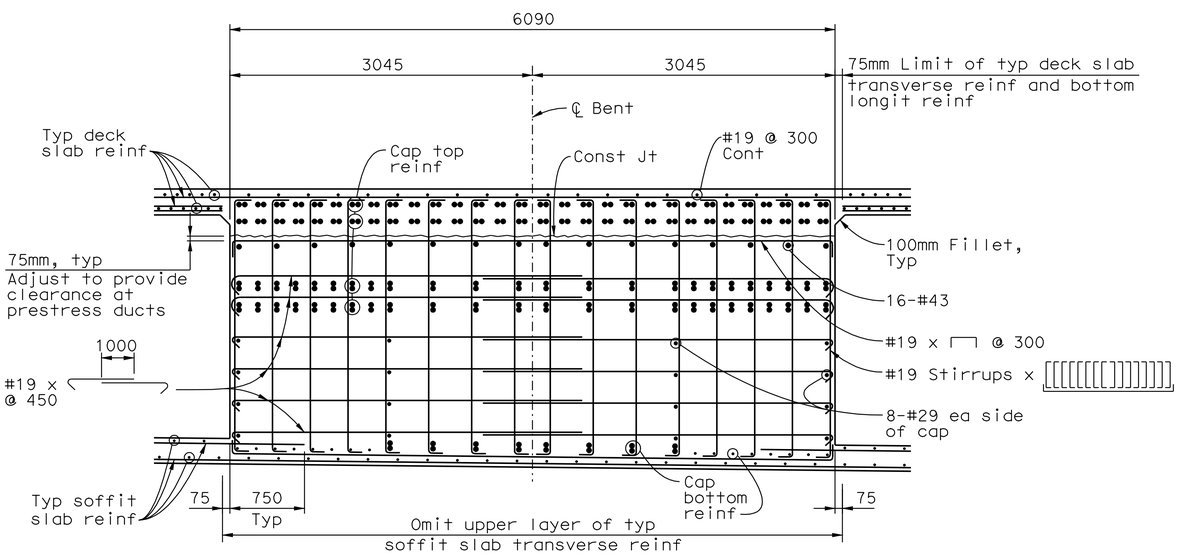

SECTION B-B

1:30

8 **REVISED PER ADDENDUM No. 8 DATED NOVEMBER 12, 2009**

ALL DIMENSIONS ARE IN MILLIMETERS UNLESS OTHERWISE SHOWN

SAN FRANCISCO OAKLAND BAY BRIDGE
EAST SPAN SEISMIC SAFETY PROJECT

YBI TRANSITION STRUCTURES

BENT W5L DETAILS NO.2

DESIGN OVERSIGHT
JUAN F. CARPIO
SIGN OFF DATE

Rev. Date: 5-18-98

	BY	CHECKED
DESIGN	Wang	Lee
DETAILS	Samson	Jain
QUANTITIES	Jain	Birdy

PREPARED FOR THE STATE OF CALIFORNIA DEPARTMENT OF TRANSPORTATION

Jal Birdy
PROJECT ENGINEER

BRIDGE NO. 34-006 L/R
KILOMETER POST 12.8

ORIGINAL SCALE IN MILLIMETERS FOR REDUCED PLANS 0 10 20 30 40 50 60 70 80 90 100

CU 04251
EA 0120S1

DISREGARD PRINTS BEARING EARLIER REVISION DATES

REVISION DATES (PRELIMINARY STAGE ONLY) 1/9/09 3/19/09 8/31/09

SHEET 44 OF 209

FILE => 04-0120s1-34-006rl-h-bdet27.add

USERNAME => trmikesl DATE PLOTTED => 09-NOV-2009 TIME PLOTTED => 13:11

DIST.	COUNTY	ROUTE	KILOMETER POST TOTAL PROJECT	SHEET NO.	TOTAL SHEETS
04	SF	80	12.7/13.2	593A	806

Caltrans Metric

REGISTERED ENGINEER - CIVIL

6-23-08
PLANS APPROVAL DATE

REGISTERED PROFESSIONAL ENGINEER A.L. ELY No. 18880 Exp. 6-30-09 CIVIL STATE OF CALIFORNIA

The State of California or its officers or agents shall not be responsible for the accuracy or completeness of electronic copies of this plan sheet.

T.Y. LIN / MOFFATT & NICHOL
TWO HARRISON STREET
SAN FRANCISCO, CA 94105

8 **ADDED PER ADDENDUM No. 8 DATED NOVEMBER 12, 2009** 8

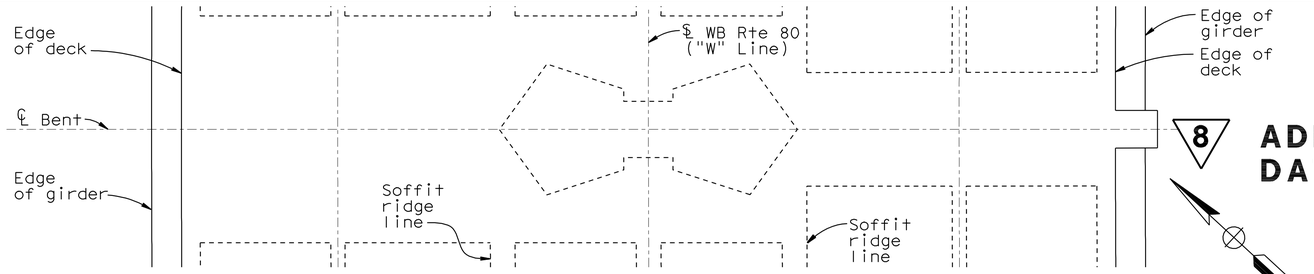

BENT CAP PLAN
1:80

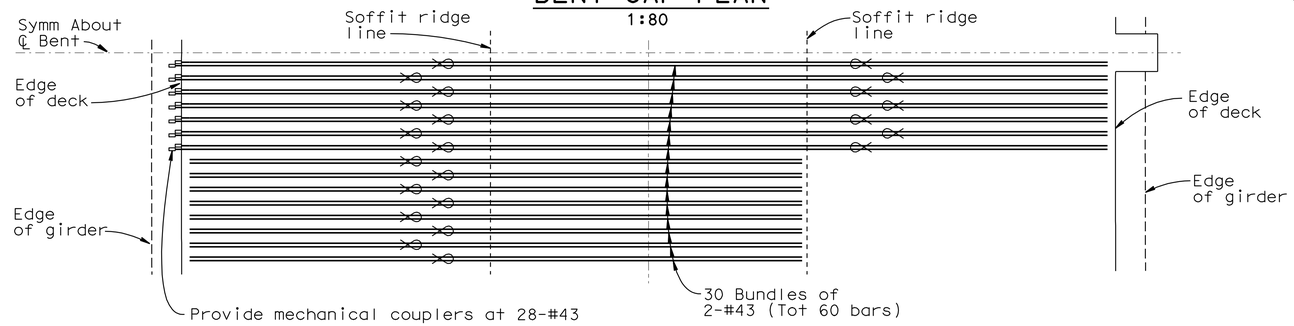

SCHEMATIC PLAN - CAP TOP REINFORCEMENT LAYER #1
No scale

Indicates bundled bars

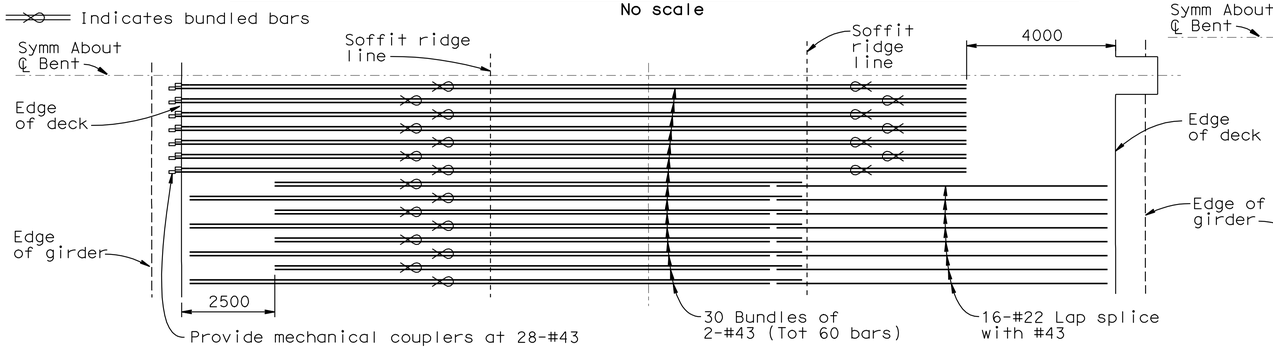

SCHEMATIC PLAN - CAP TOP REINFORCEMENT LAYER #2
No scale

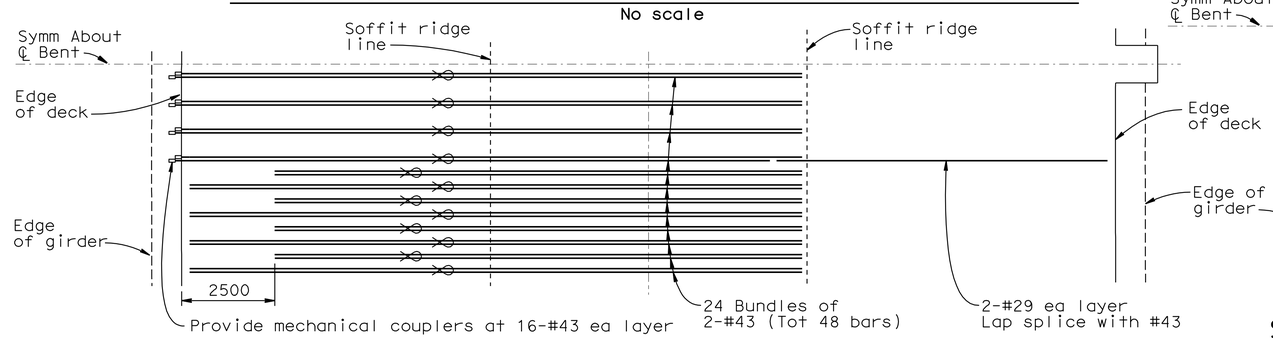

SCHEMATIC PLAN - CAP TOP REINFORCEMENT LAYERS #3 & #4
No scale

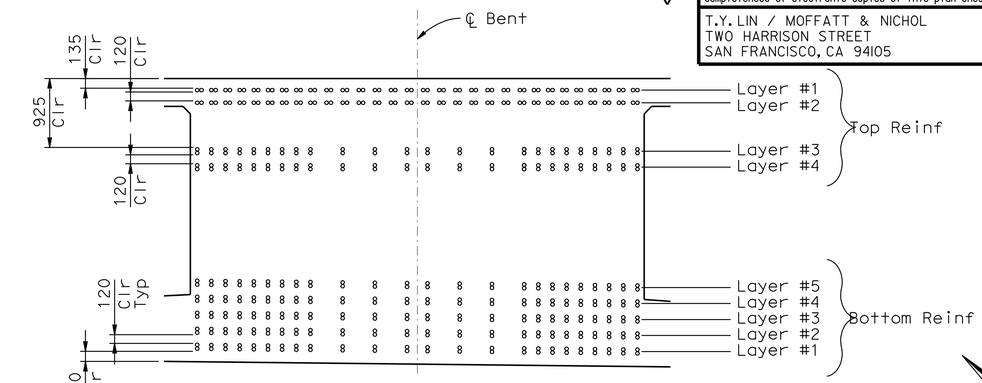

BENT CAP MAIN REINFORCEMENT
1:40

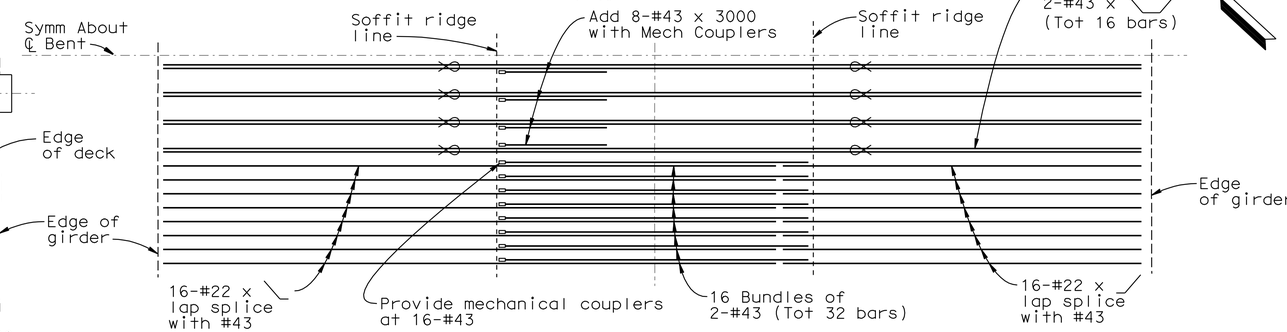

SCHEMATIC PLAN - CAP BOTTOM REINFORCEMENT LAYER #1
No scale

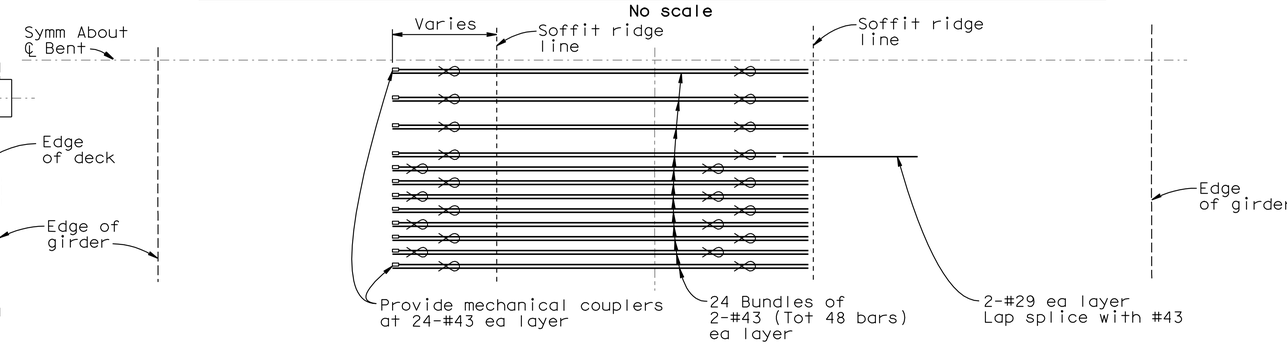

SCHEMATIC PLAN - CAP BOTTOM REINFORCEMENT LAYERS #2 THRU #5
No scale

ALL DIMENSIONS ARE IN MILLIMETERS UNLESS OTHERWISE SHOWN

DESIGN OVERSIGHT
JOHN MOOK, BERNARD CHAN, JUAN F. CARPIO
SIGN OFF DATE

Rev. Date: 5-18-98

	BY	CHECKED
DESIGN	Wang/Lee	Greer
DETAILS	van Ryn/Zucchi/Mai	Jain
QUANTITIES	Liao	E. Nichol

ORIGINAL SCALE IN MILLIMETERS FOR REDUCED PLANS 0 10 20 30 40 50 60 70 80 90 100

PREPARED FOR THE STATE OF CALIFORNIA DEPARTMENT OF TRANSPORTATION

Jal Birdy
PROJECT ENGINEER

CU 04251
EA 0120S1

BRIDGE NO. 34-0006 L/R
KILOMETER POST 12.8

DISREGARD PRINTS BEARING EARLIER REVISION DATES

REVISION DATES (PRELIMINARY STAGE ONLY): 9/13/01 01/31/08 3/31/08 4/9/09 5/10/02 2/14/03 7/3/06 10/4/06 1/24/01 6/28/07

SHEET 44A OF 209

SAN FRANCISCO OAKLAND BAY BRIDGE EAST SPAN SEISMIC SAFETY PROJECT

YBI TRANSITION STRUCTURES

BENT W5L DETAILS NO.3

FILE => 04-0120s1-34-006r1-h-bdet27a.add

USERNAME => trmikesi DATE PLOTTED => 09-NOV-2009 TIME PLOTTED => 13:11

DIST.	COUNTY	ROUTE	KILOMETER POST TOTAL PROJECT	SHEET NO.	TOTAL SHEETS
04	SF	80	12.7/13.2	594	806

Caltrans Metric

REGISTERED ENGINEER - CIVIL

6-23-08
PLANS APPROVAL DATE

REGISTERED PROFESSIONAL ENGINEER A.L. ELY No. 18880 Exp. 6-30-09 CIVIL STATE OF CALIFORNIA

The State of California or its officers or agents shall not be responsible for the accuracy or completeness of electronic copies of this plan sheet.

T.Y. LIN / MOFFATT & NICHOL
TWO HARRISON STREET
SAN FRANCISCO, CA 94105

8

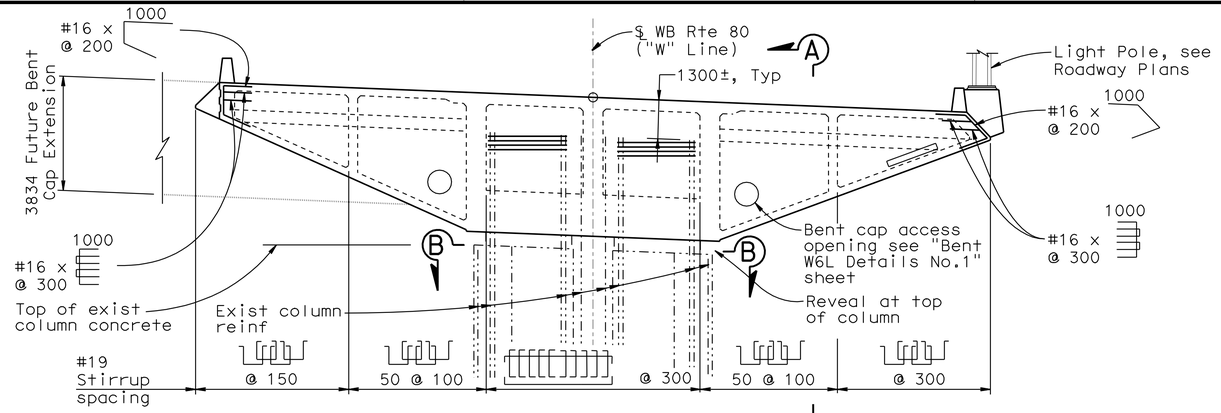

ELEVATION
1:100

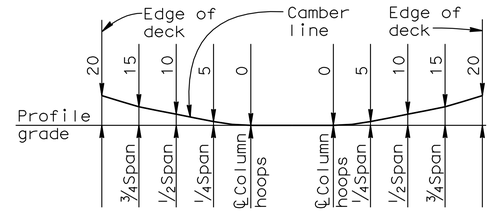

BENT CAP CAMBER DIAGRAM
NO SCALE

Note: Camber diagram does not include allowance for falsework settlement

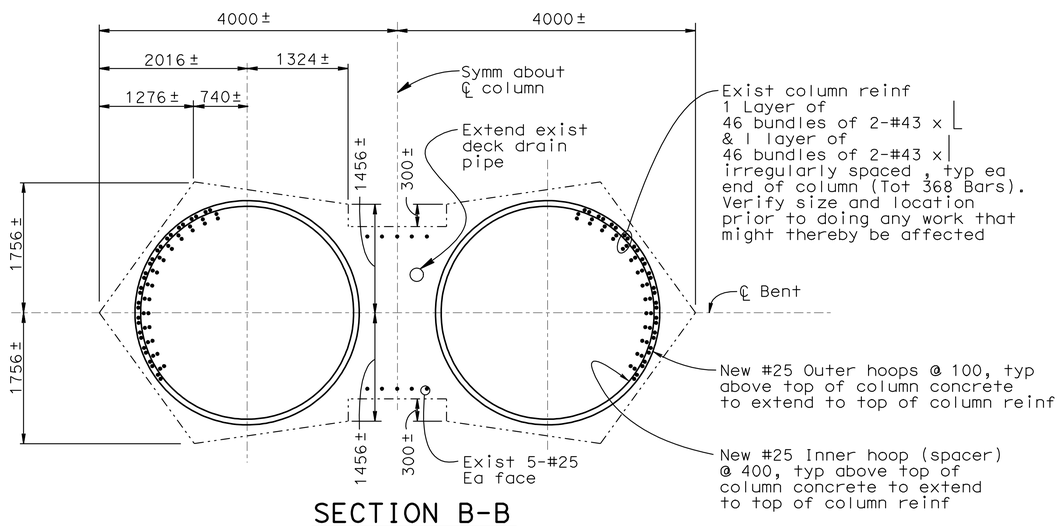

SECTION B-B
1:40

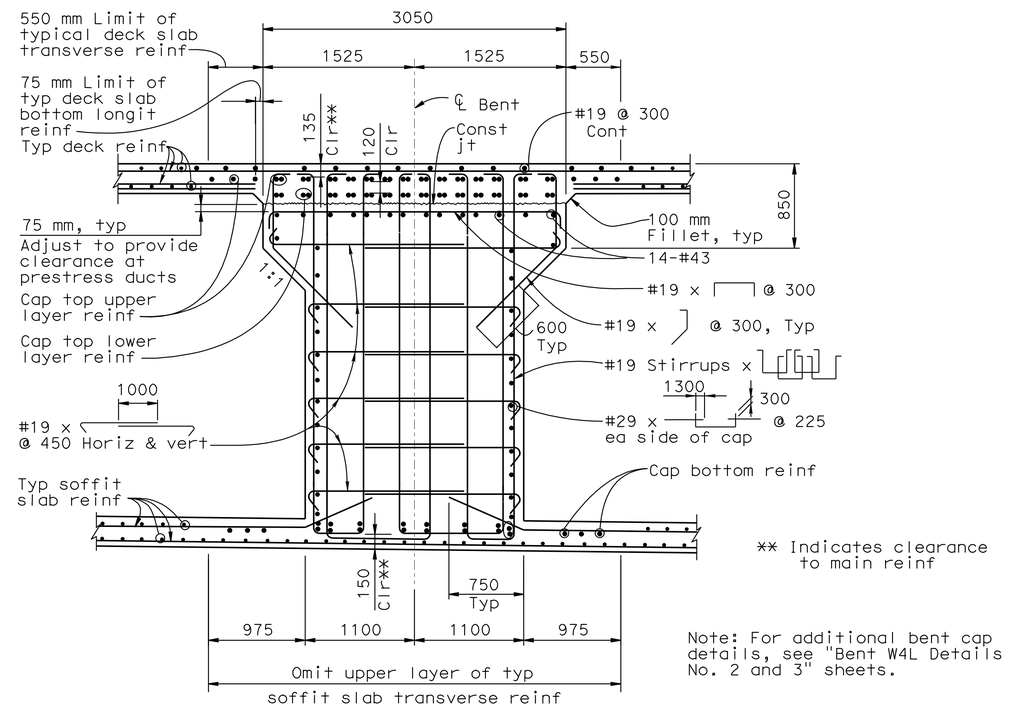

** Indicates clearance to main reinf

Note: For additional bent cap details, see "Bent W4L Details No. 2 and 3" sheets.

SECTION A-A
1:30

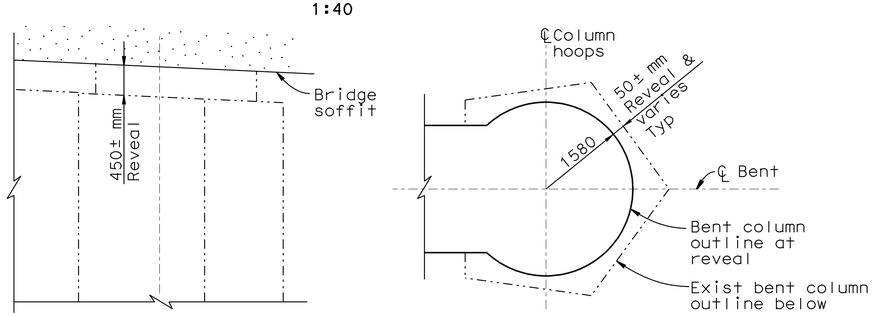

ELEVATION PLAN

REVEAL DETAIL AT TOP OF COLUMN
NO SCALE

8 **REVISED PER ADDENDUM No. 8 DATED NOVEMBER 12, 2009**

ALL DIMENSIONS ARE IN MILLIMETERS UNLESS OTHERWISE SHOWN

DESIGN OVERSIGHT
JOHN MOOK, BERNARD CHAN, JUAN F. CARPIO

SIGN OFF DATE

Rev. Date: 5-18-98

	BY	CHECKED
DESIGN	Darrah/Shangkuan	Ahn
DETAILS	van Ryn/Zucchi/Mai	Jain
QUANTITIES	Liao	E. Nichol

PREPARED FOR THE STATE OF CALIFORNIA DEPARTMENT OF TRANSPORTATION

Jal Birdy
PROJECT ENGINEER

BRIDGE NO. 34-0006 L/R
KILOMETER POST 12.8

SAN FRANCISCO OAKLAND BAY BRIDGE
EAST SPAN SEISMIC SAFETY PROJECT

YBI TRANSITION STRUCTURES
BENT W4L DETAILS NO.1

ORIGINAL SCALE IN MILLIMETERS FOR REDUCED PLANS 0 10 20 30 40 50 60 70 80 90 100

CU 04251
EA 0120S1

DISREGARD PRINTS BEARING EARLIER REVISION DATES

REVISION DATES (PRELIMINARY STAGE ONLY) 9/13/07 01/24/08 3/3/08 5/22/09 8/28/09 8/31/09 7/3/06 10/4/06 1/24/07 6/25/07

SHEET 45 OF 209

FILE => 04-0120s1-34-006rl-h-bdet28.add

USERNAME => tmikesl DATE PLOTTED => 09-NOV-2009 TIME PLOTTED => 13:11

DIST.	COUNTY	ROUTE	KILOMETER POST TOTAL PROJECT	SHEET NO.	TOTAL SHEETS
04	SF	80	12.7/13.2	594A	806

REGISTERED ENGINEER - CIVIL

PLANS APPROVAL DATE

REGISTERED PROFESSIONAL ENGINEER A.L. ELY No. 18880 Exp. 6-30-09 CIVIL STATE OF CALIFORNIA

The State of California or its officers or agents shall not be responsible for the accuracy or completeness of electronic copies of this plan sheet.

T.Y. LIN / MOFFATT & NICHOL
TWO HARRISON STREET
SAN FRANCISCO, CA 94105

Caltrans Metric

Note: For Section A-A see "Bent W4L Details No. 1" sheet.

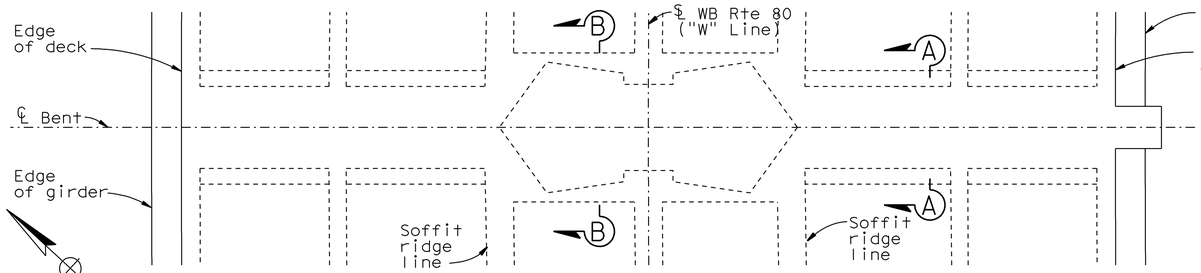

BENT CAP PLAN
1:80

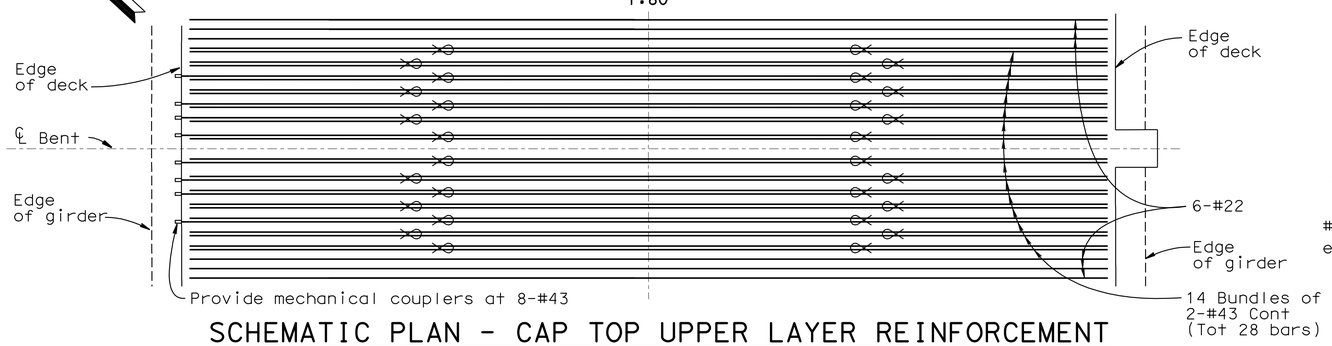

SCHEMATIC PLAN - CAP TOP UPPER LAYER REINFORCEMENT
No scale

Indicates bundled bars

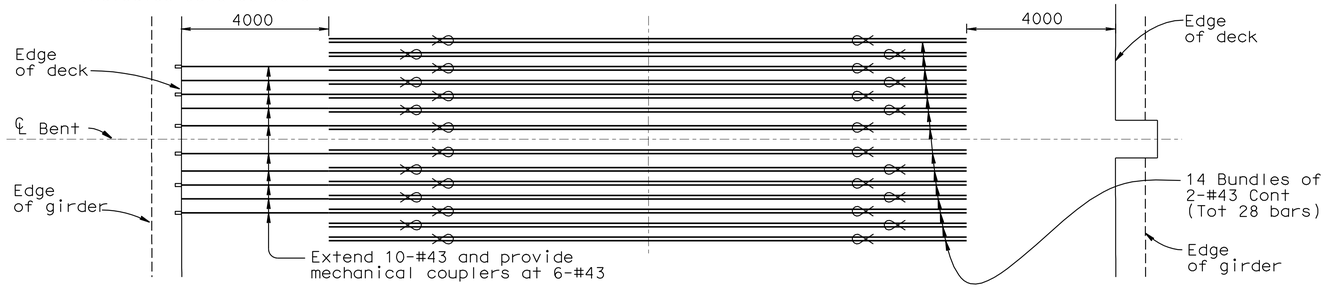

SCHEMATIC PLAN - CAP TOP LOWER LAYER REINFORCEMENT
No scale

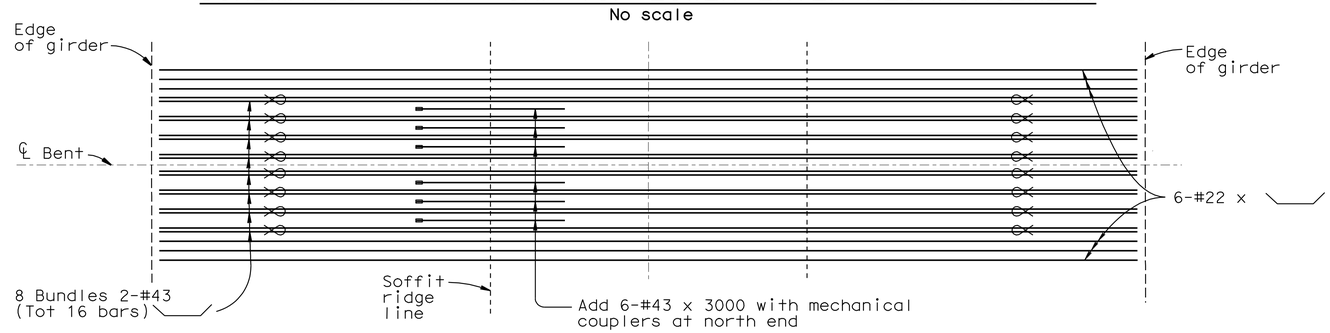

SCHEMATIC PLAN - CAP BOTTOM REINFORCEMENT
No scale

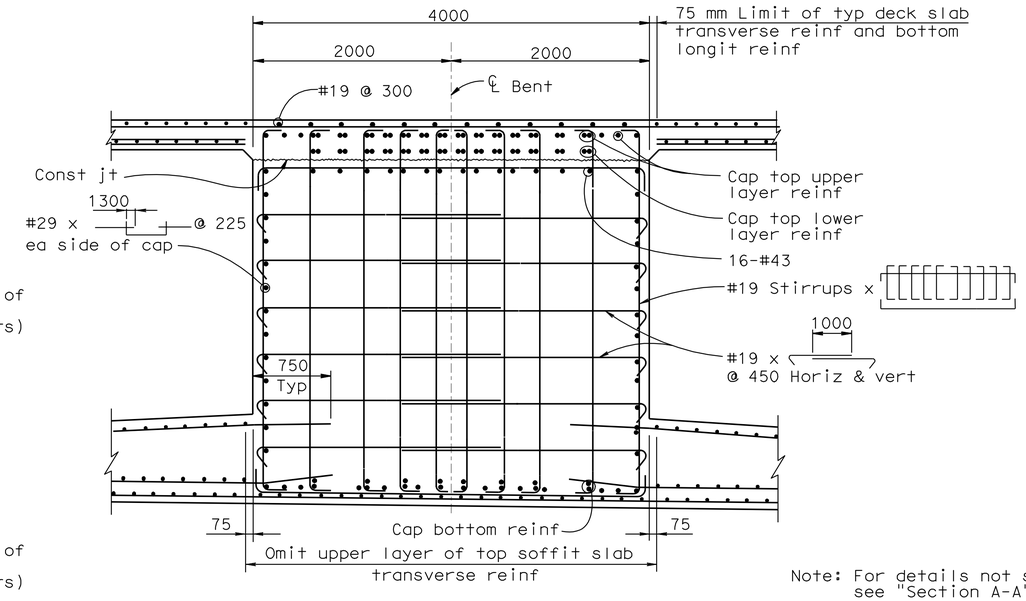

Note: For details not shown, see "Section A-A"

SECTION B-B
1:30

8 **ADDED PER ADDENDUM No. 8 DATED NOVEMBER 12, 2009**

ALL DIMENSIONS ARE IN MILLIMETERS UNLESS OTHERWISE SHOWN

SAN FRANCISCO OAKLAND BAY BRIDGE
EAST SPAN SEISMIC SAFETY PROJECT

YBI TRANSITION STRUCTURES

BENT W4L DETAILS NO.2

DESIGN OVERSIGHT
JUAN F. CARPIO
SIGN OFF DATE

	BY	CHECKED
DESIGN	Wang	Greer
DETAILS	van Ryn/Zucchi/Mai	Jain
QUANTITIES	Liao	E. Nichol

PREPARED FOR THE STATE OF CALIFORNIA DEPARTMENT OF TRANSPORTATION

Jal Birdy
PROJECT ENGINEER

BRIDGE NO. 34-006 L/R
KILOMETER POST 12.8

Rev. Date: 5-18-98

ORIGINAL SCALE IN MILLIMETERS FOR REDUCED PLANS 0 10 20 30 40 50 60 70 80 90 100

CU 04251
EA 0120S1

DISREGARD PRINTS BEARING EARLIER REVISION DATES

REVISION DATES (PRELIMINARY STAGE ONLY) 8/19/09

SHEET 45A OF 209

FILE => 04-0120s1-34-006rl-h-bdet28a.add

USERNAME => trmikesl DATE PLOTTED => 09-NOV-2009 TIME PLOTTED => 13:12

DIST.	COUNTY	ROUTE	KILOMETER POST TOTAL PROJECT	SHEET NO.	TOTAL SHEETS
04	SF	80	12.7/13.2	594B	806

Caltrans Metric

REGISTERED ENGINEER - CIVIL

PLANS APPROVAL DATE

REGISTERED PROFESSIONAL ENGINEER A.L. ELY No. 18880 Exp. 6-30-09 CIVIL STATE OF CALIFORNIA

8

The State of California or its officers or agents shall not be responsible for the accuracy or completeness of electronic copies of this plan sheet.

T.Y. LIN / MOFFATT & NICHOL
TWO HARRISON STREET
SAN FRANCISCO, CA 94105

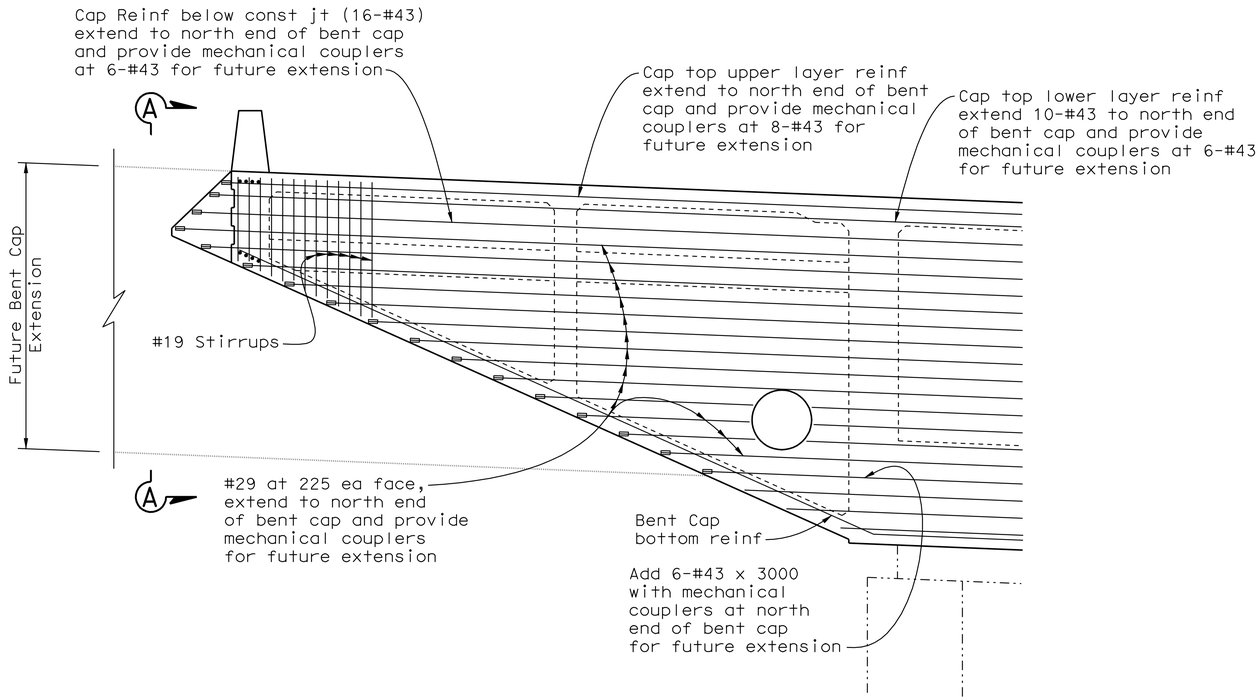

ELEVATION AT NORTH SIDE OF BENT CAP

1:40

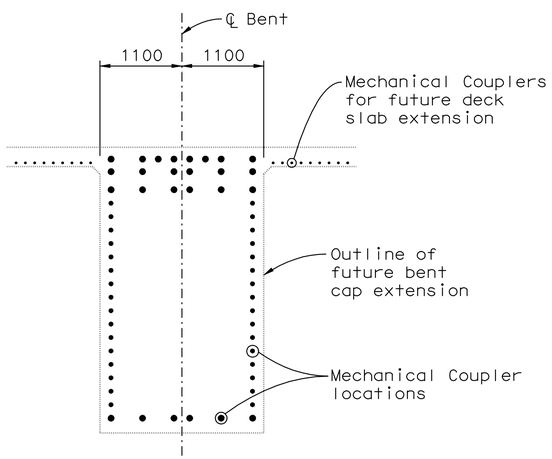

SECTION A-A

1:40

8 **ADDED PER ADDENDUM No. 8 DATED NOVEMBER 12, 2009**

ALL DIMENSIONS ARE IN MILLIMETERS UNLESS OTHERWISE SHOWN

DESIGN OVERSIGHT
JUAN F. CARPIO
SIGN OFF DATE

	BY	CHECKED
DESIGN	Wang	Lee
DETAILS	Samson	Jain
QUANTITIES	Jain	Birdy

PREPARED FOR THE STATE OF CALIFORNIA DEPARTMENT OF TRANSPORTATION

Jal Birdy
PROJECT ENGINEER

BRIDGE NO. 34-006 L/R
KILOMETER POST 12.8

SAN FRANCISCO OAKLAND BAY BRIDGE
EAST SPAN SEISMIC SAFETY PROJECT

YBI TRANSITION STRUCTURES

BENT W4L DETAILS NO.3

Rev. Date: 5-18-98

ORIGINAL SCALE IN MILLIMETERS FOR REDUCED PLANS 0 10 20 30 40 50 60 70 80 90 100

CU 04251
EA 0120S1

DISREGARD PRINTS BEARING EARLIER REVISION DATES

REVISION DATES (PRELIMINARY STAGE ONLY) 4/3/09 8/19/09

SHEET 45B OF 209

FILE => 04-0120s1-34-006rl-h-bdet28b.add

USERNAME => trmikest DATE PLOTTED => 09-NOV-2009 TIME PLOTTED => 13:12

DIST.	COUNTY	ROUTE	KILOMETER POST TOTAL PROJECT	SHEET NO.	TOTAL SHEETS
04	SF	80	12.7/13.2	595	806

Caltrans Metric

REGISTERED ENGINEER - CIVIL

6-23-08
PLANS APPROVAL DATE

REGISTERED PROFESSIONAL ENGINEER A.L. ELY No. 18880 Exp. 6-30-09 CIVIL STATE OF CALIFORNIA

The State of California or its officers or agents shall not be responsible for the accuracy or completeness of electronic copies of this plan sheet.

T.Y. LIN / MOFFATT & NICHOL
TWO HARRISON STREET
SAN FRANCISCO, CA 94105

8

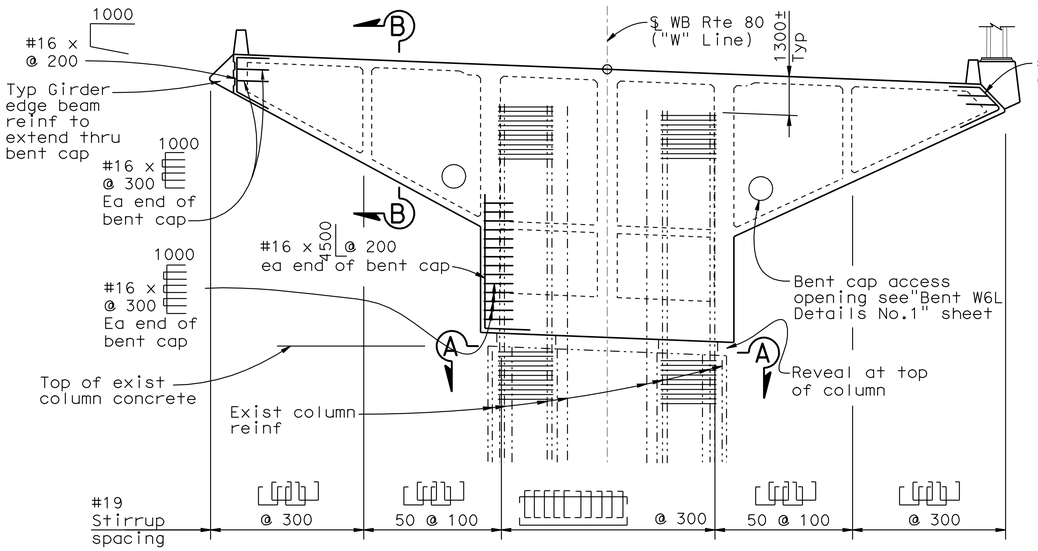

ELEVATION
1:100

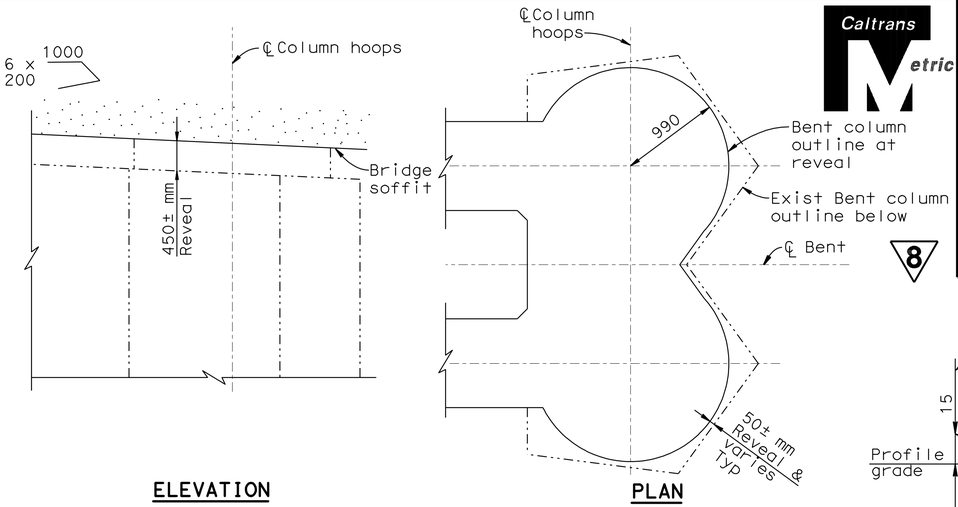

REVEAL DETAIL AT TOP OF COLUMN
NO SCALE

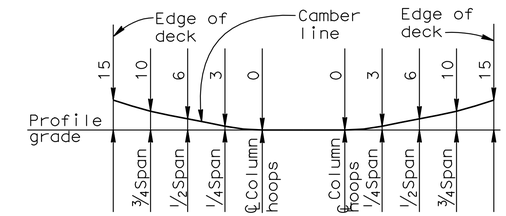

BENT CAP
CAMBER DIAGRAM
NO SCALE

Note: Camber diagram does not include allowance for falsework settlement

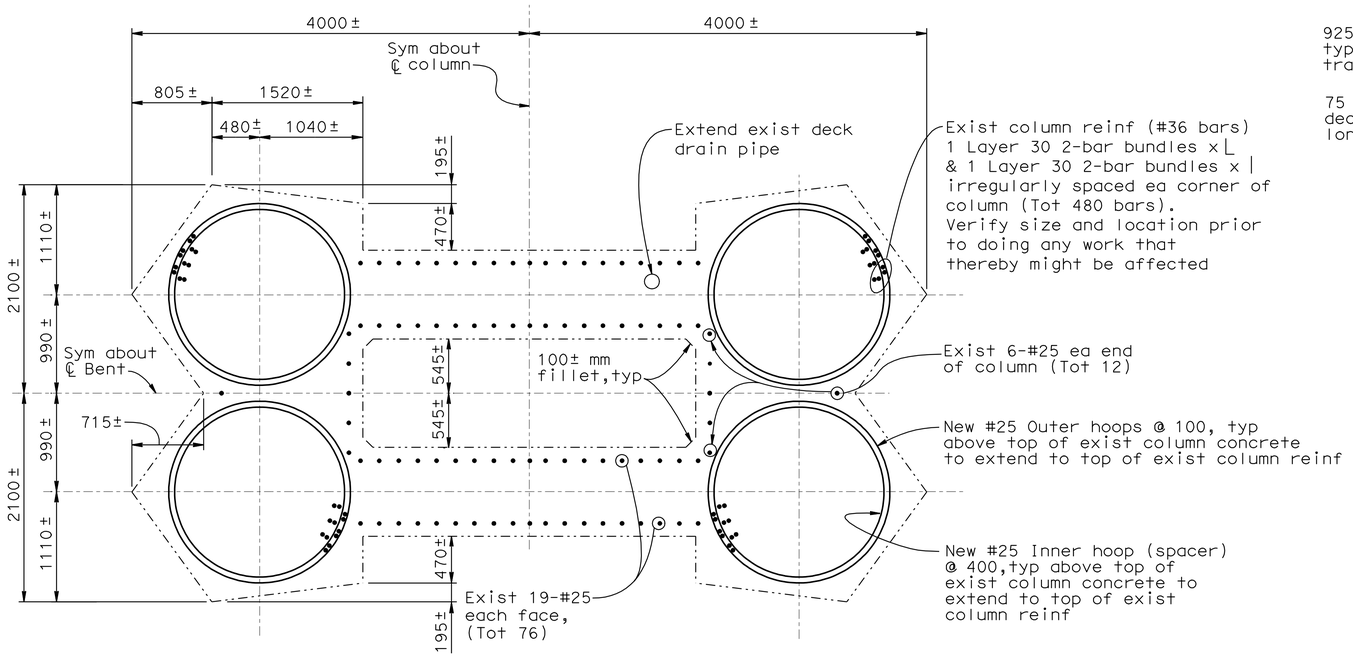

SECTION A-A
1:30

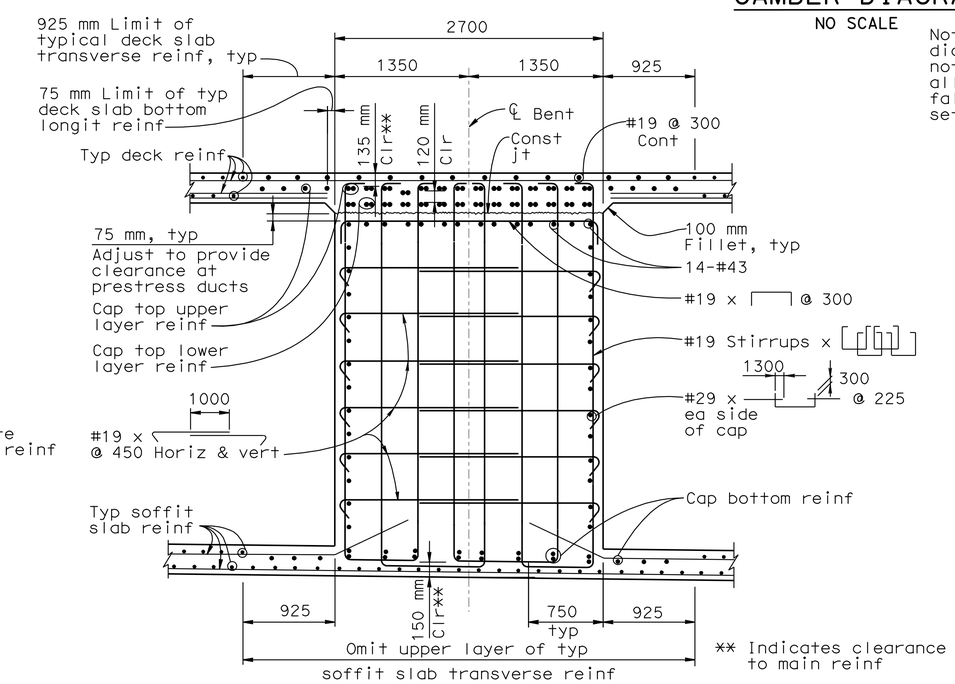

SECTION B-B
1:30

8 REVISED PER ADDENDUM No. 8 DATED NOVEMBER 12, 2009

ALL DIMENSIONS ARE IN MILLIMETERS UNLESS OTHERWISE SHOWN

DESIGN OVERSIGHT
JOHN MOOK, BERNARD CHAN, JUAN F. CARPIO
SIGN OFF DATE

	BY	CHECKED
DESIGN	Darrah/Shangkuan	Ahn
DETAILS	van Ryn/Zucchi/Mai	Jain
QUANTITIES	Liao	E. Nichol

PREPARED FOR THE STATE OF CALIFORNIA DEPARTMENT OF TRANSPORTATION

Jal Birdy
PROJECT ENGINEER

BRIDGE NO. 34-0006 L/R
KILOMETER POST 12.8

SAN FRANCISCO OAKLAND BAY BRIDGE
EAST SPAN SEISMIC SAFETY PROJECT

YBI TRANSITION STRUCTURES

BENT W3L DETAILS NO.1

Rev. Date: 5-18-98

ORIGINAL SCALE IN MILLIMETERS FOR REDUCED PLANS 0 10 20 30 40 50 60 70 80 90 100

CU 04251
EA 0120S1

DISREGARD PRINTS BEARING EARLIER REVISION DATES

REVISION DATES (PRELIMINARY STAGE ONLY): 9/13/07 01/31/08 3/31/08 5/22/09 5/30/02 2/14/03 7/3/06 10/2/06 1/24/07 6/28/07

SHEET 46 OF 209

FILE => 04-0120s1-34-006rl-h-bdet29.dwg

USERNAME => trmikesl DATE PLOTTED => 09-NOV-2009 TIME PLOTTED => 13:12

DIST.	COUNTY	ROUTE	KILOMETER POST TOTAL PROJECT	SHEET NO.	TOTAL SHEETS
04	SF	80	12.7/13.2	598	806

Caltrans Metric

REGISTERED ENGINEER - CIVIL

6-23-08
PLANS APPROVAL DATE

REGISTERED PROFESSIONAL ENGINEER A.L. ELY No. 18880 Exp. 6-30-09 CIVIL STATE OF CALIFORNIA

The State of California or its officers or agents shall not be responsible for the accuracy or completeness of electronic copies of this plan sheet.

T.Y. LIN / MOFFATT & NICHOL
TWO HARRISON STREET
SAN FRANCISCO, CA 94105

Notes:

Indicates bundled bars

Bent cap details shown on this sheet are typical for Bents W10R & W9R.

8

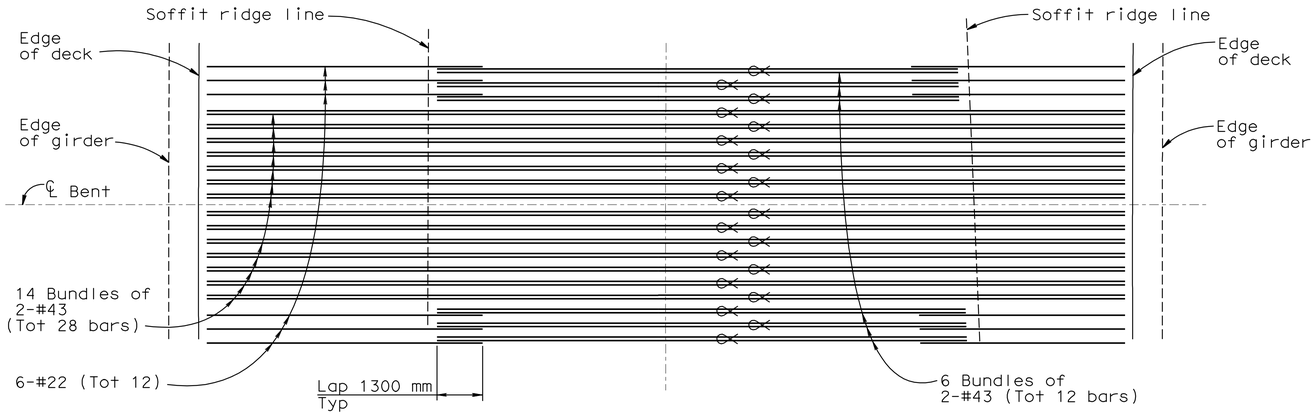

SCHEMATIC PLAN - CAP TOP UPPER LAYER REINFORCEMENT
No scale

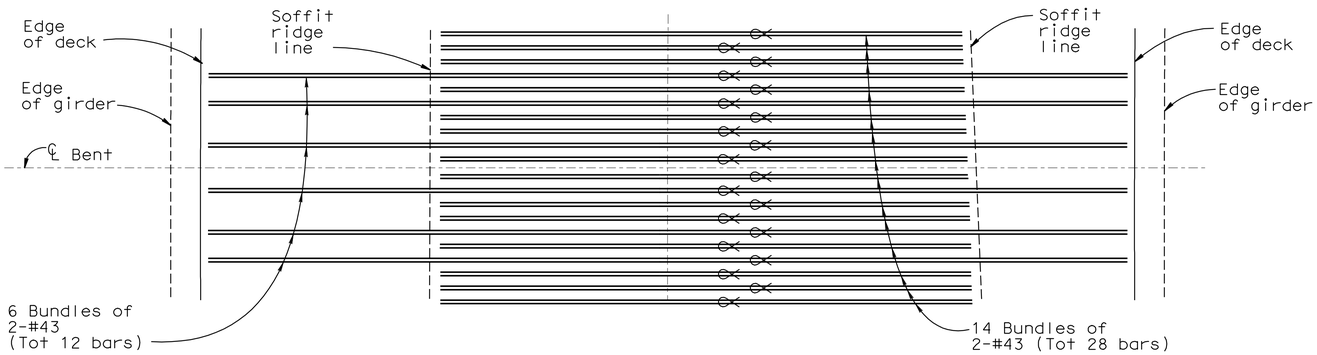

SCHEMATIC PLAN - CAP TOP LOWER LAYER REINFORCEMENT
No scale

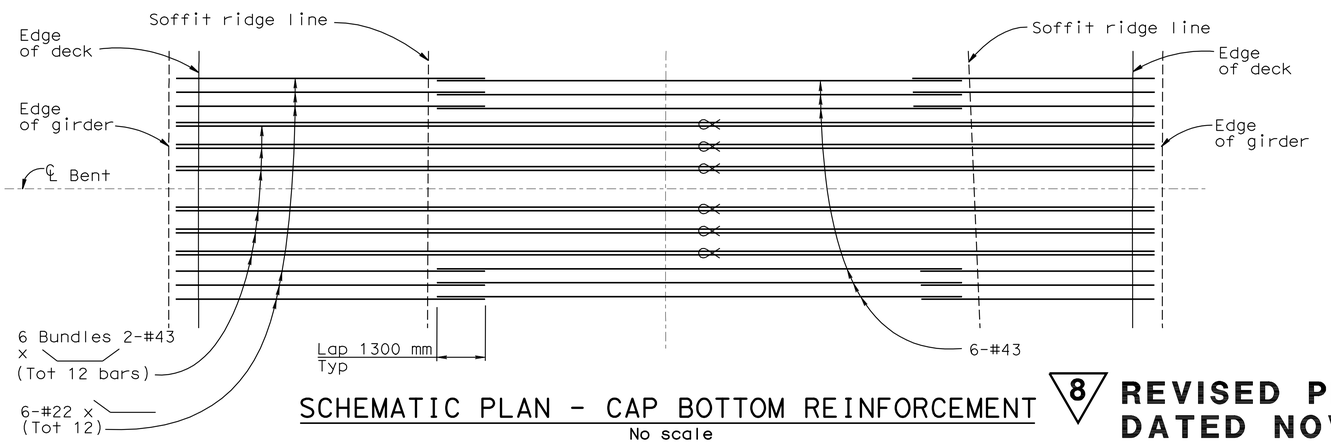

SCHEMATIC PLAN - CAP BOTTOM REINFORCEMENT
No scale

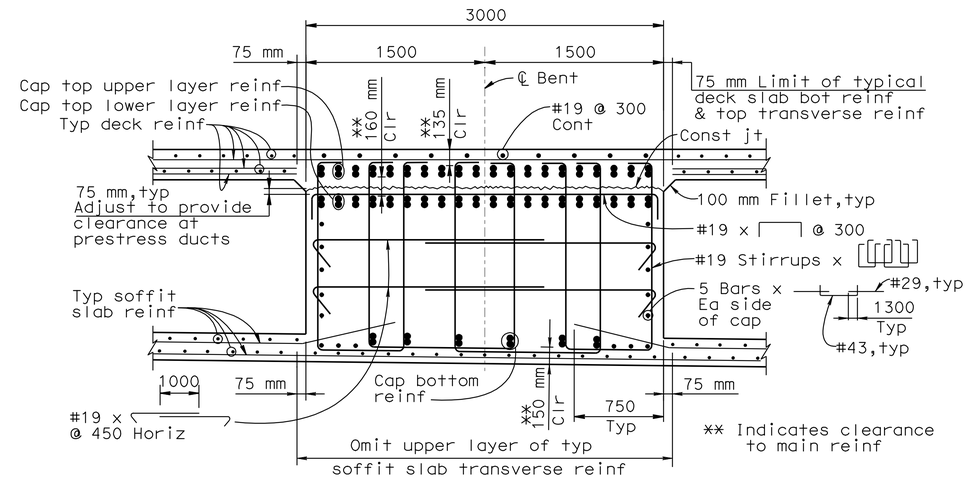

SECTION A-A
1:25

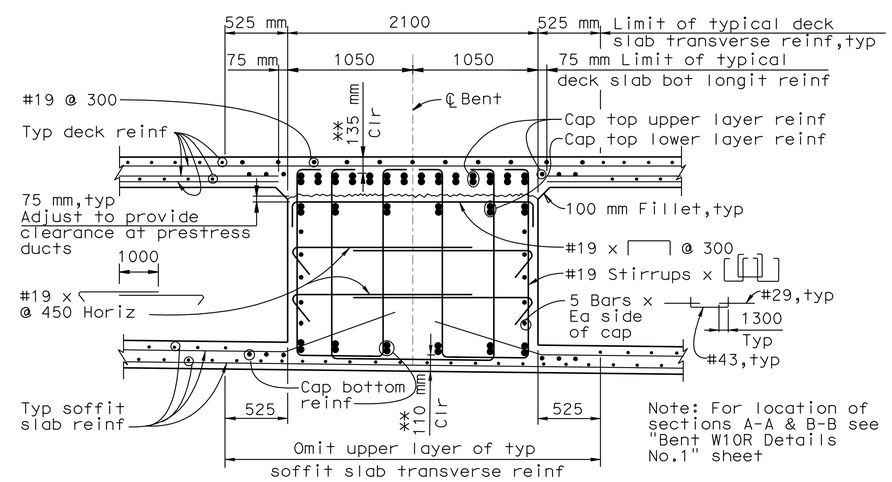

SECTION B-B
1:25

8 **REVISED PER ADDENDUM No. 8**
DATED NOVEMBER 12, 2009

ALL DIMENSIONS ARE IN MILLIMETERS UNLESS OTHERWISE SHOWN

DESIGN OVERSIGHT
JOHN MOOK, BERNARD CHAN, JUAN F. CARPIO
March 3, 2008
SIGN OFF DATE

Rev. Date: 5-18-98

	BY	CHECKED
DESIGN	Wang	Greer
DETAILS	van Ryn/Zucchi/Mai	Jain
QUANTITIES	Liao	E. Nichol

ORIGINAL SCALE IN MILLIMETERS FOR REDUCED PLANS 0 10 20 30 40 50 60 70 80 90 100

PREPARED FOR THE STATE OF CALIFORNIA DEPARTMENT OF TRANSPORTATION

Jal Birdy
PROJECT ENGINEER

CU 04251
EA 0120S1

BRIDGE NO. 34-0006 L/R
KILOMETER POST 12.8

DISREGARD PRINTS BEARING EARLIER REVISION DATES

REVISION DATES (PRELIMINARY STAGE ONLY): 9/13/07 01/31/08 3/3/08 10/12/09 5/30/02 2/14/03 3/3/06 10/4/06 1/24/07 6/28/07

SHEET 49 OF 209

SAN FRANCISCO OAKLAND BAY BRIDGE EAST SPAN SEISMIC SAFETY PROJECT

YBI TRANSITION STRUCTURES

BENT W10R DETAILS NO.2

FILE => 04-0120s1-34-006rl-h-bdet32.add

USERNAME => trmikes1 DATE PLOTTED => 09-NOV-2009 TIME PLOTTED => 13:12

DIST.	COUNTY	ROUTE	KILOMETER POST TOTAL PROJECT	SHEET NO.	TOTAL SHEETS
04	SF	80	12.7/13.2	602	806

REGISTERED ENGINEER - CIVIL
6-23-08
PLANS APPROVAL DATE

REGISTERED PROFESSIONAL ENGINEER A.L. ELY No. 18880 Exp. 6-30-09 CIVIL STATE OF CALIFORNIA

The State of California or its officers or agents shall not be responsible for the accuracy or completeness of electronic copies of this plan sheet.

T.Y. LIN / MOFFATT & NICHOL
TWO HARRISON STREET
SAN FRANCISCO, CA 94105

Caltrans Metric

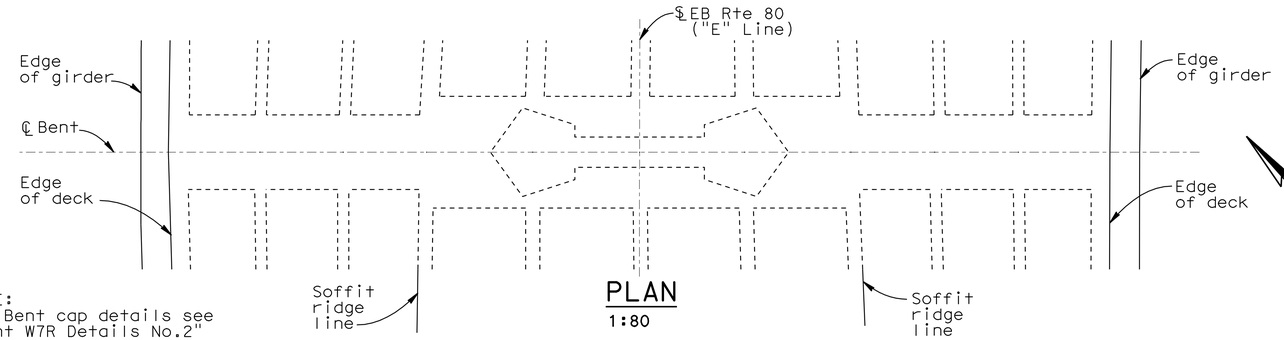

PLAN
1:80

NOTE:
For Bent cap details see "Bent W7R Details No.2" sheet.

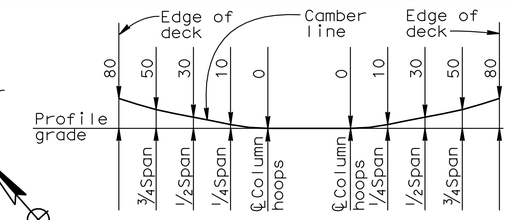

BENT CAP CAMBER DIAGRAM
NO SCALE

Note: Camber diagram does not include allowance for falsework settlement

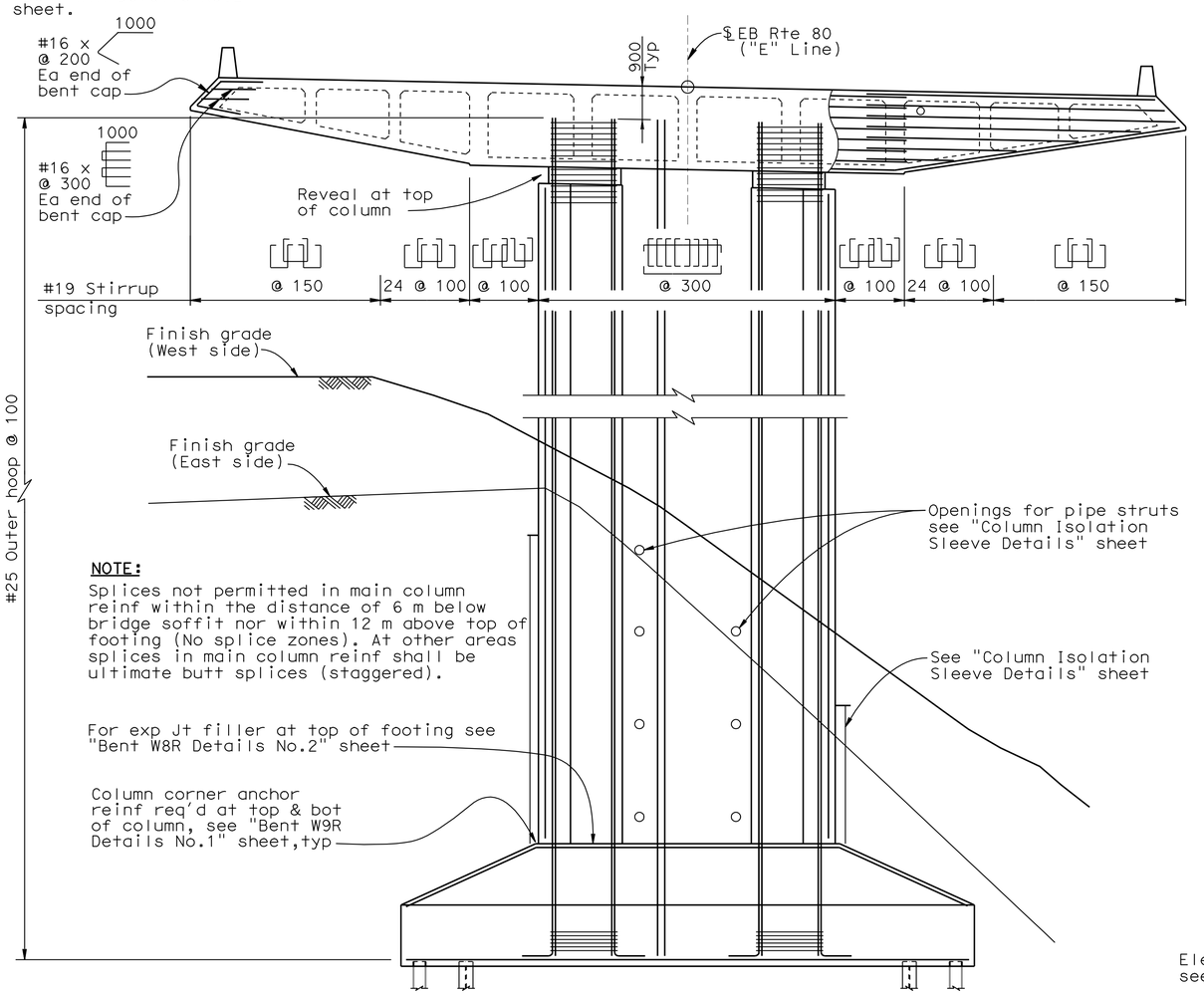

NOTE:
Splices not permitted in main column reinf within the distance of 6 m below bridge soffit nor within 12 m above top of footing (No splice zones). At other areas splices in main column reinf shall be ultimate butt splices (staggered).

ELEVATION
1:80

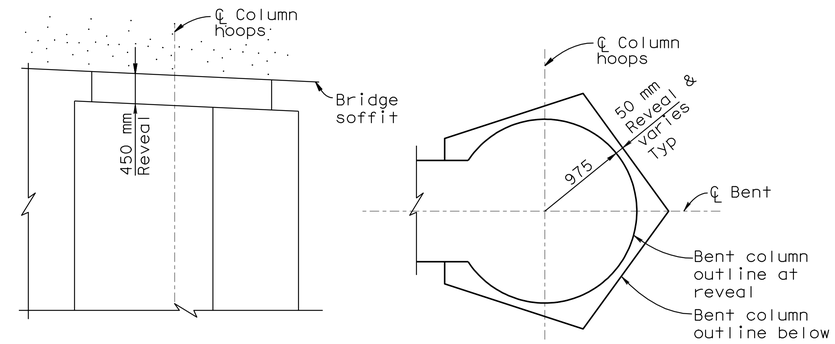

ELEVATION **PLAN**

REVEAL DETAIL AT TOP OF COLUMN
NO SCALE

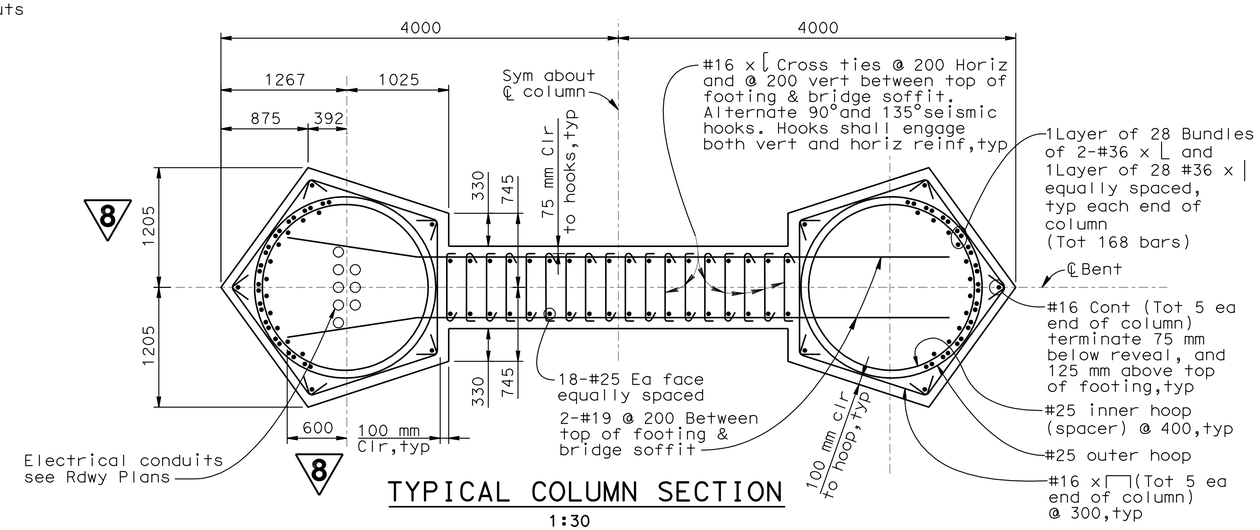

TYPICAL COLUMN SECTION
1:30

8 REVISED PER ADDENDUM No. 8 DATED NOVEMBER 12, 2009

ALL DIMENSIONS ARE IN MILLIMETERS UNLESS OTHERWISE SHOWN

DESIGN OVERSIGHT
JOHN MOOK, BERNARD CHAN, JUAN F. CARPIO
March 3, 2008
SIGN OFF DATE

Rev. Date: 5-18-98

	BY	CHECKED
DESIGN	Darrah/Shangkuan	Ahn
DETAILS	van Ryn/Zucchi/Mai	Jain
QUANTITIES	Liao	E. Nichol

PREPARED FOR THE STATE OF CALIFORNIA DEPARTMENT OF TRANSPORTATION

Jal Birdy
PROJECT ENGINEER

BRIDGE NO. 34-0006 L/R
KILOMETER POST 12.8

SAN FRANCISCO OAKLAND BAY BRIDGE
EAST SPAN SEISMIC SAFETY PROJECT

YBI TRANSITION STRUCTURES

BENT W8R DETAILS NO.1

ORIGINAL SCALE IN MILLIMETERS FOR REDUCED PLANS 0 10 20 30 40 50 60 70 80 90 100

CU 04251
EA 0120S1

DISREGARD PRINTS BEARING EARLIER REVISION DATES

REVISION DATES (PRELIMINARY STAGE ONLY) 9/13/07 01/31/08 3/3/08 10/12/09 5/30/02 2/14/03 3/3/06 10/4/06 1/24/07 6/28/07

SHEET 53 OF 209

FILE => 04-0120s1-34-006rl-h-bdet36.add

USERNAME => trmikes1 DATE PLOTTED => 09-NOV-2009 TIME PLOTTED => 13:13

DIST.	COUNTY	ROUTE	KILOMETER POST TOTAL PROJECT	SHEET NO.	TOTAL SHEETS
04	SF	80	12.7/13.2	605	806

REGISTERED ENGINEER - CIVIL

6-23-08
PLANS APPROVAL DATE

REGISTERED PROFESSIONAL ENGINEER A.L. ELY No. 18880 Exp. 6-30-09 CIVIL STATE OF CALIFORNIA

The State of California or its officers or agents shall not be responsible for the accuracy or completeness of electronic copies of this plan sheet.

T.Y. LIN / MOFFATT & NICHOL
TWO HARRISON STREET
SAN FRANCISCO, CA 94105

Caltrans Metric

Note:

Indicates bundled bars

8 REVISED PER ADDENDUM No. 8 DATED NOVEMBER 12, 2009

7 8

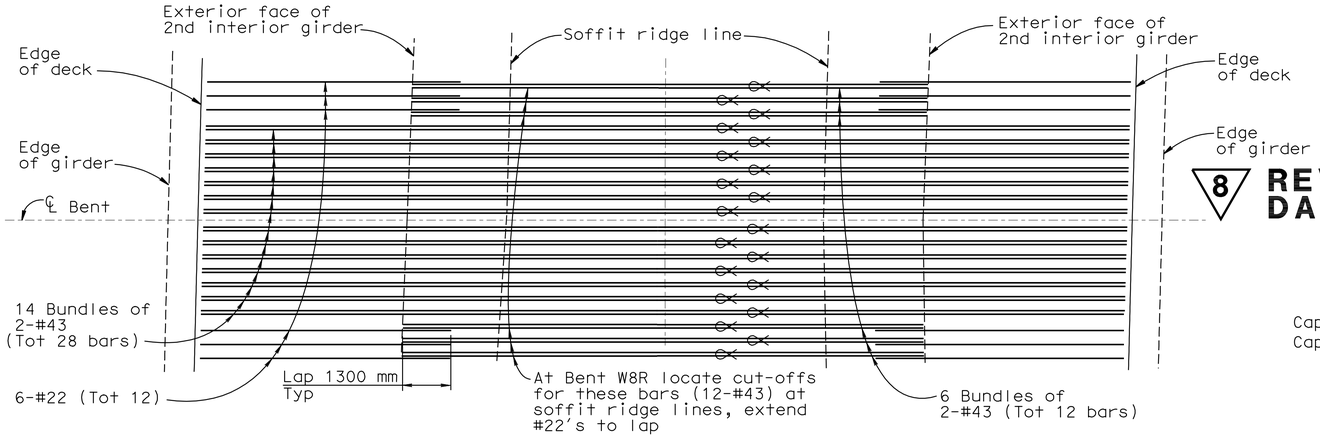

SCHEMATIC PLAN - CAP TOP UPPER LAYER REINFORCEMENT

No scale

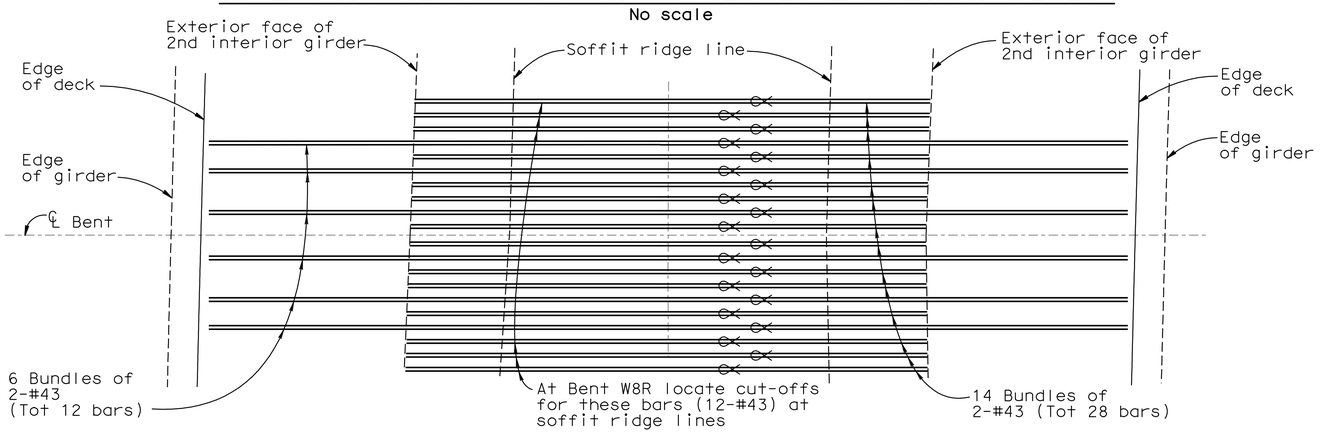

SCHEMATIC PLAN - CAP TOP LOWER LAYER REINFORCEMENT

No scale

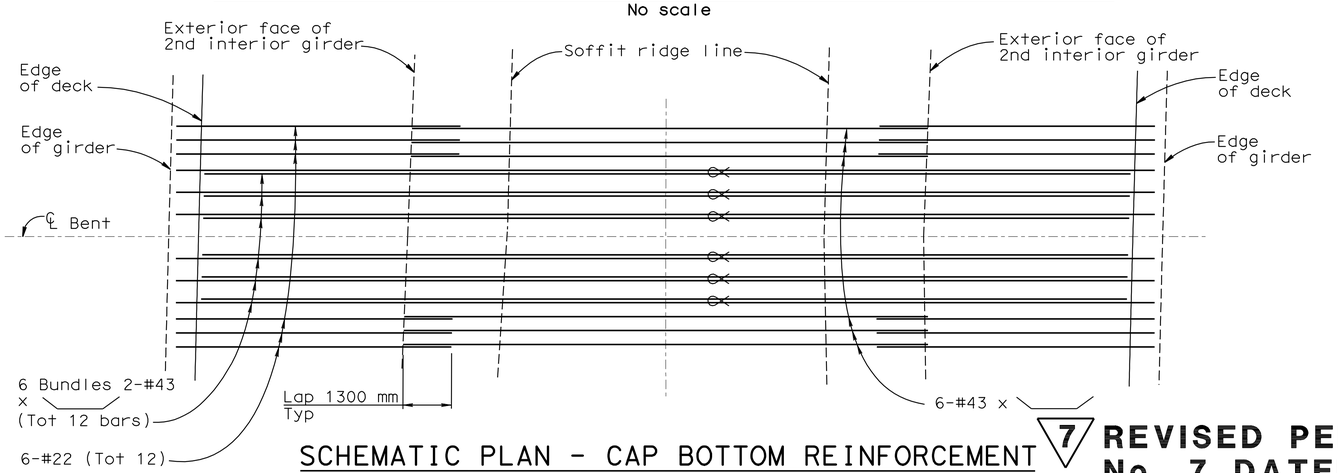

SCHEMATIC PLAN - CAP BOTTOM REINFORCEMENT

No scale

7 REVISED PER ADDENDUM No. 7 DATED OCTOBER 19, 2009

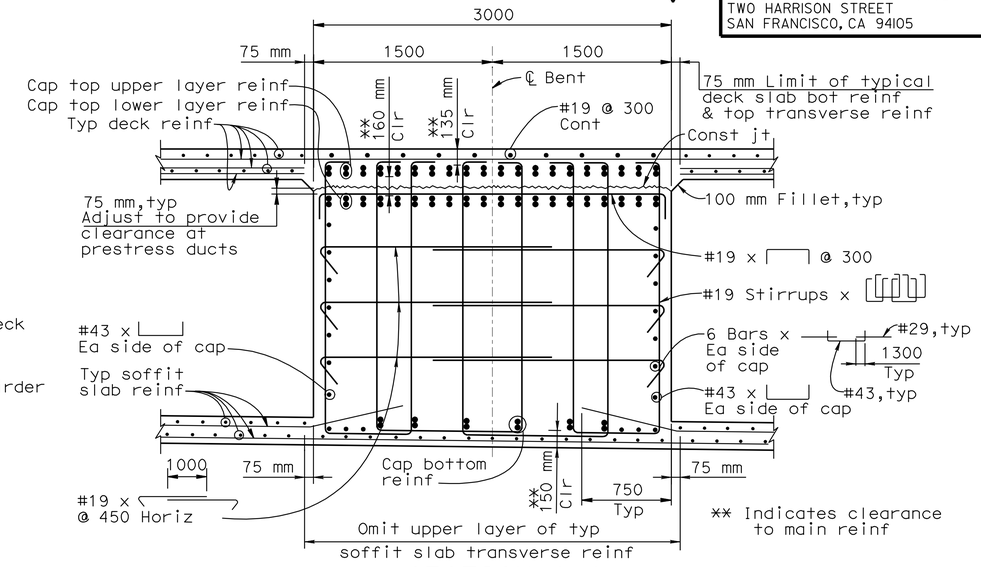

** Indicates clearance to main reinf

SECTION A-A

1:25

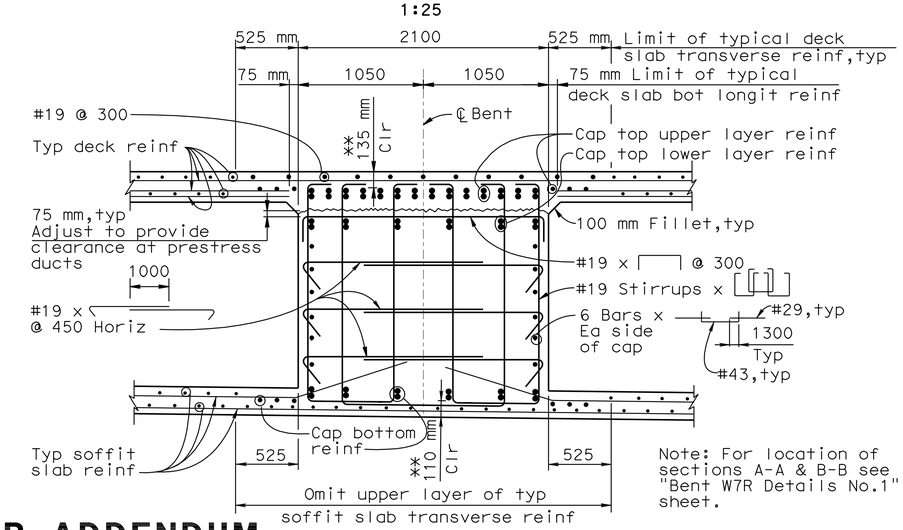

Note: For location of sections A-A & B-B see "Bent W7R Details No.1" sheet.

SECTION B-B

1:25

ALL DIMENSIONS ARE IN MILLIMETERS UNLESS OTHERWISE SHOWN

DESIGN OVERSIGHT
JOHN MOOK, BERNARD CHAN, JUAN F. CARPIO
March 3, 2008
SIGN OFF DATE

Rev. Date: 5-18-98

	BY	CHECKED
DESIGN	Wang	Greer
DETAILS	van Ryn/Zucchi/Mai	Jain
QUANTITIES	Liao	E. Nichol

PREPARED FOR THE STATE OF CALIFORNIA DEPARTMENT OF TRANSPORTATION

Jal Birdy
PROJECT ENGINEER

BRIDGE NO. 34-0006 L/R
KILOMETER POST 12.8

SAN FRANCISCO OAKLAND BAY BRIDGE
EAST SPAN SEISMIC SAFETY PROJECT

YBI TRANSITION STRUCTURES

BENT W7R DETAILS NO.2

ORIGINAL SCALE IN MILLIMETERS FOR REDUCED PLANS 0 10 20 30 40 50 60 70 80 90 100

CU 04251
EA 0120S1

DISREGARD PRINTS BEARING EARLIER REVISION DATES

REVISION DATES (PRELIMINARY STAGE ONLY): 9/13/07 01/24/08 3/3/08 5/22/09 8/28/09 9/29/09 10/28/09 10/4/06 1/24/07 6/25/07

SHEET 56 OF 209

FILE => 04-0120s1-34-006r1-h-bdet39.add

USERNAME => trmikesl DATE PLOTTED => 09-NOV-2009 TIME PLOTTED => 13:13

DIST.	COUNTY	ROUTE	KILOMETER POST TOTAL PROJECT	SHEET NO.	TOTAL SHEETS
04	SF	80	12.7/13.2	614	806

REGISTERED ENGINEER - CIVIL

6-23-08
PLANS APPROVAL DATE

REGISTERED PROFESSIONAL ENGINEER A.L. ELY No. 18880 Exp. 6-30-09 CIVIL STATE OF CALIFORNIA

The State of California or its officers or agents shall not be responsible for the accuracy or completeness of electronic copies of this plan sheet.

T.Y. LIN / MOFFATT & NICHOL
TWO HARRISON STREET
SAN FRANCISCO, CA 94105

Caltrans Metric

** Dimension shown is perpendicular to edge of deck

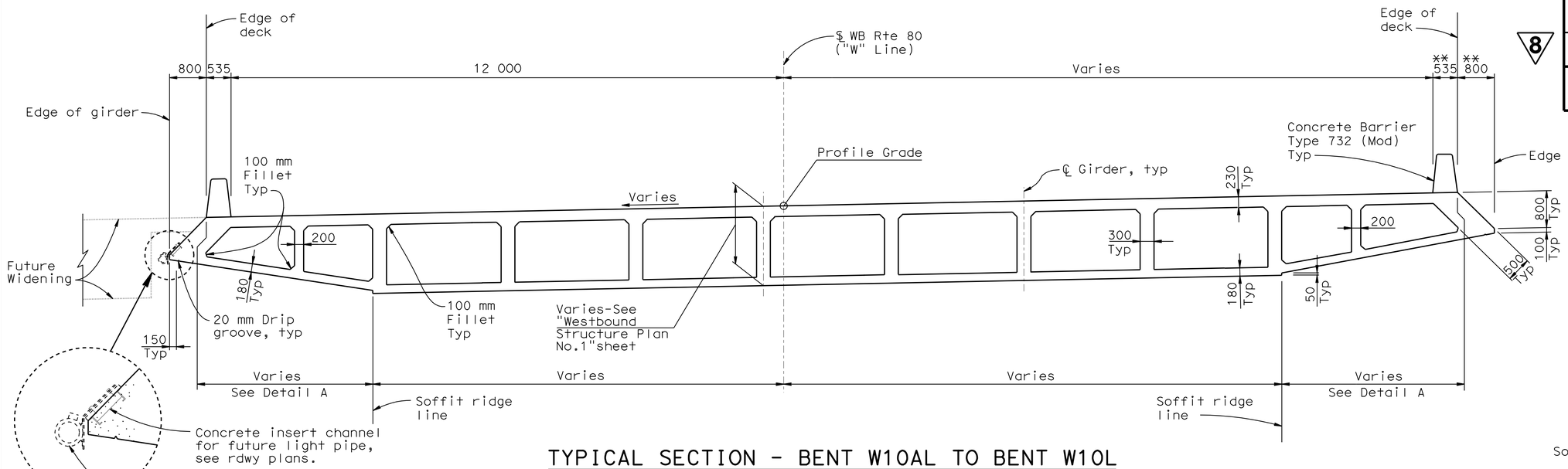

TYPICAL SECTION - BENT W10AL TO BENT W10L

1:50

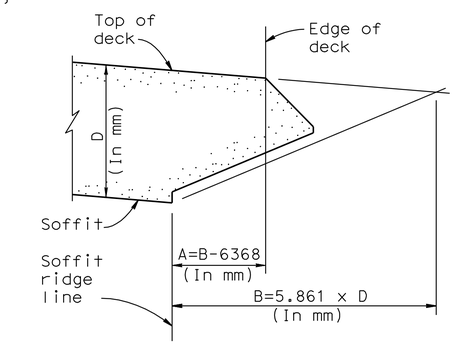

Note: Dimensions A & B are measured perpendicular to edge of deck

DETAIL A

(Typ bent W10AL to W7L)
NO SCALE

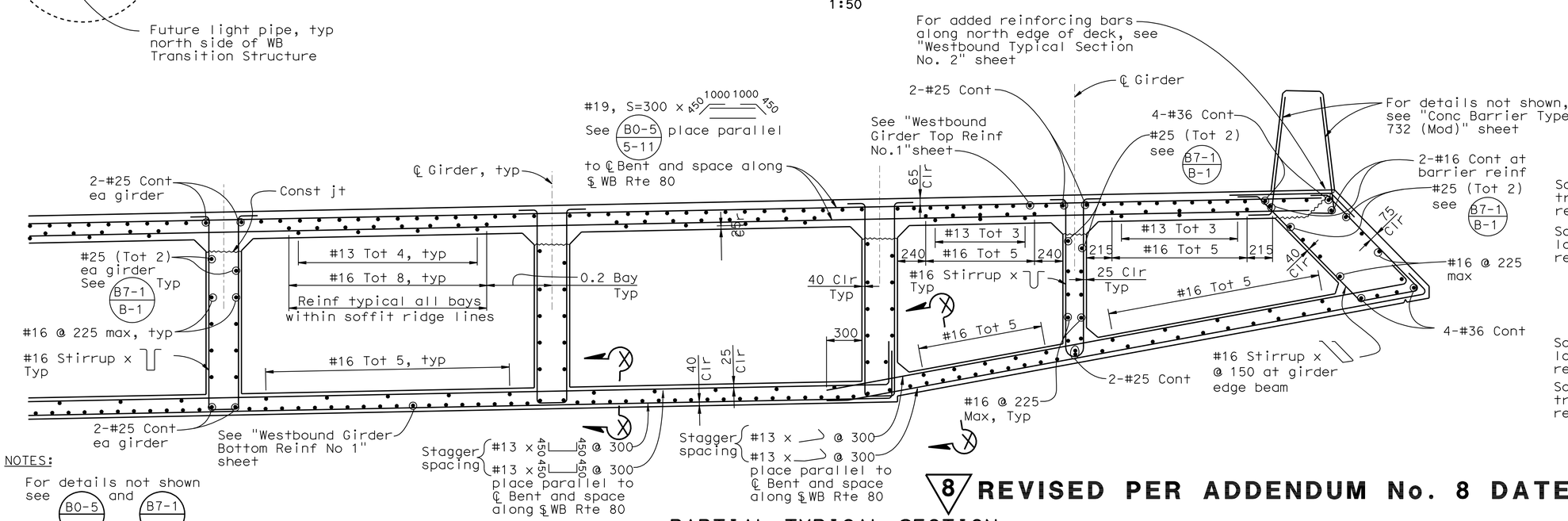

NOTES:

For details not shown see B0-5 and B7-1

PARTIAL TYPICAL SECTION

1:20

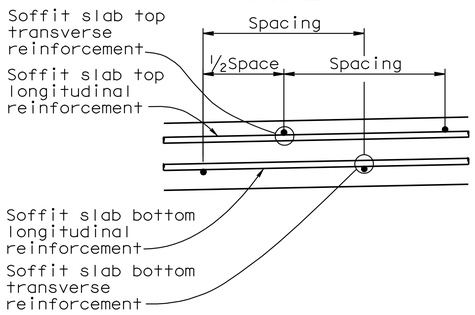

SECTION X-X

NO SCALE

8 REVISED PER ADDENDUM No. 8 DATED NOVEMBER 12, 2009

ALL DIMENSIONS ARE IN MILLIMETERS UNLESS OTHERWISE SHOWN

DESIGN OVERSIGHT
JOHN MOOK, BERNARD CHAN, JUAN F. CARPIO

SIGN OFF DATE

Rev. Date: 5-18-98

	BY	CHECKED
DESIGN	Jain	Desai
DETAILS	van Ryn/Zucchi/Mai	Jain
QUANTITIES	Liao	E. Nichol

PREPARED FOR THE STATE OF CALIFORNIA DEPARTMENT OF TRANSPORTATION

Jal Birdy
PROJECT ENGINEER

BRIDGE NO. 34-0006 L/R
KILOMETER POST 12.8

SAN FRANCISCO OAKLAND BAY BRIDGE
EAST SPAN SEISMIC SAFETY PROJECT

YBI TRANSITION STRUCTURES

WESTBOUND TYPICAL SECTION NO.1

ORIGINAL SCALE IN MILLIMETERS FOR REDUCED PLANS 0 10 20 30 40 50 60 70 80 90 100

CU 04251
EA 0120S1

DISREGARD PRINTS BEARING EARLIER REVISION DATES

REVISION DATES (PRELIMINARY STAGE ONLY): 9/13/01 01/24/08 3/3/08 4/3/09 8/19/09 2/14/03 7/3/06 10/4/06 1/24/01 6/25/07

SHEET 65 OF 209

FILE => 04-0120s1-34-006rl-k-ts01.add

USERNAME => trmikesl DATE PLOTTED => 09-NOV-2009 TIME PLOTTED => 13:13

DIST.	COUNTY	ROUTE	KILOMETER POST TOTAL PROJECT	SHEET NO.	TOTAL SHEETS
04	SF	80	12.7/13.2	615	806

Caltrans Metric

REGISTERED ENGINEER - CIVIL

6-23-08
PLANS APPROVAL DATE

REGISTERED PROFESSIONAL ENGINEER A.L. ELY No. 18880 Exp. 6-30-09 CIVIL STATE OF CALIFORNIA

The State of California or its officers or agents shall not be responsible for the accuracy or completeness of electronic copies of this plan sheet.

T.Y. LIN / MOFFATT & NICHOL
TWO HARRISON STREET
SAN FRANCISCO, CA 94105

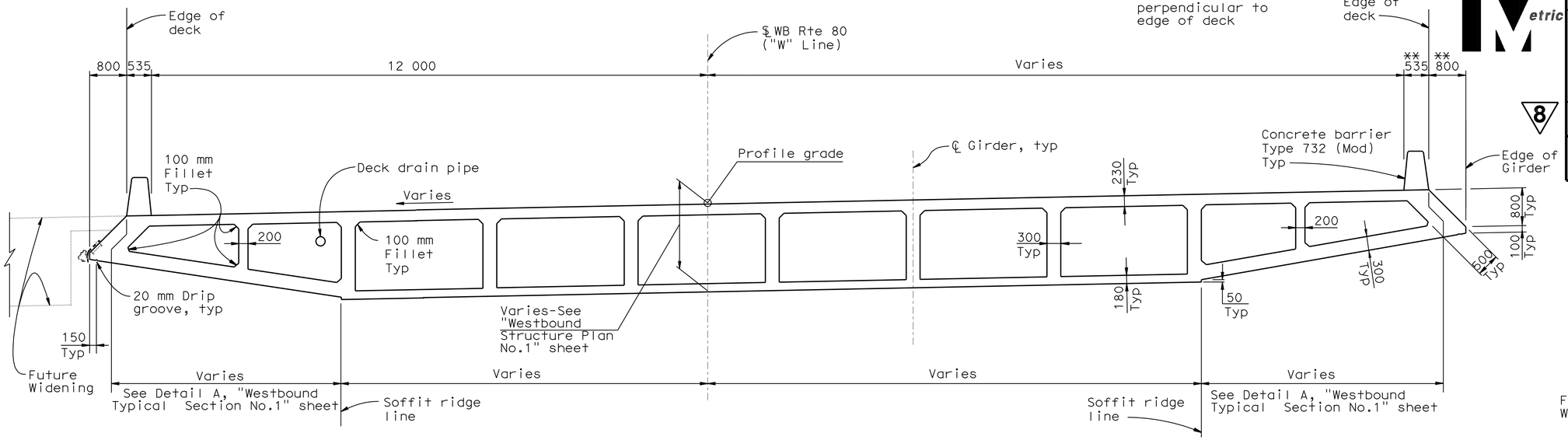

TYPICAL SECTION - BENT W10L TO BENT W9L

1:50

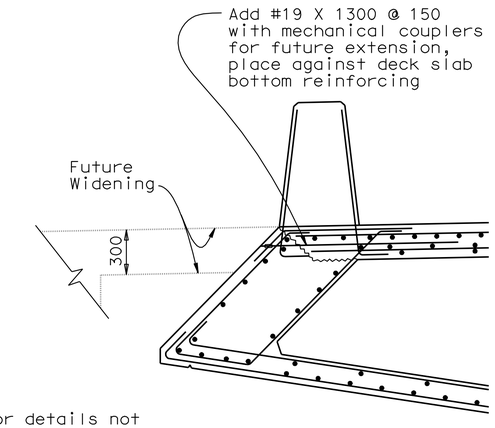

ADDED REINFORCING BARS ALONG NORTH EDGE OF DECK STA 51+30.40 TO STA 51+79.65

1:20

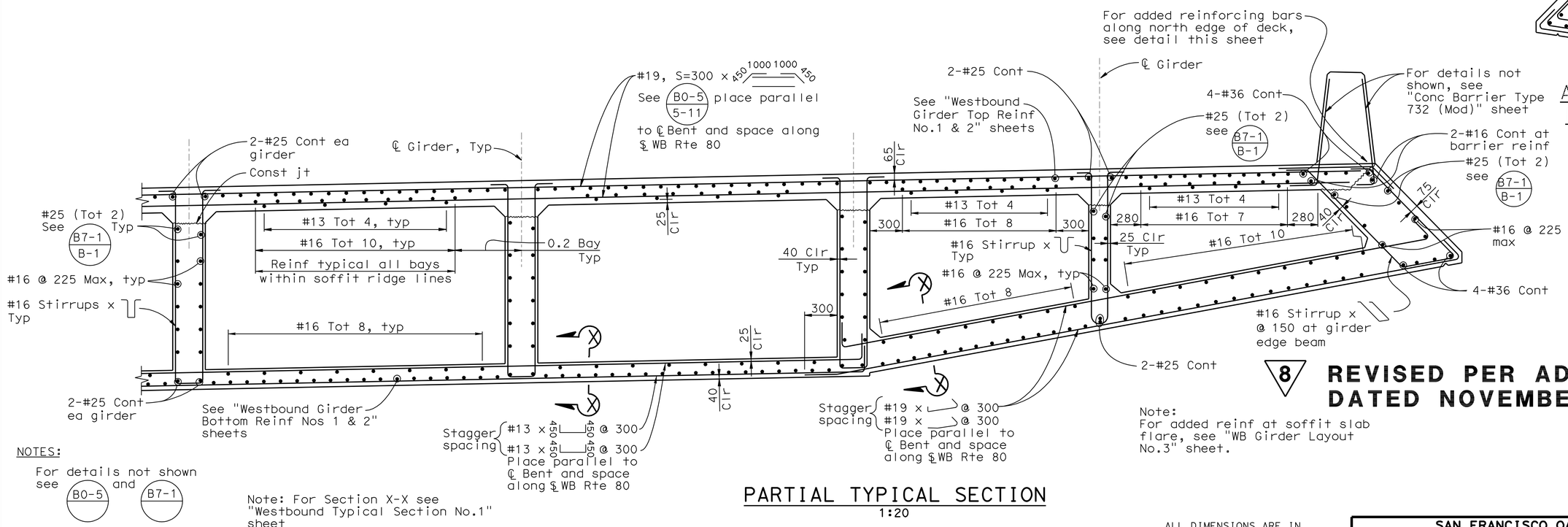

8 **REVISED PER ADDENDUM No. 8 DATED NOVEMBER 12, 2009**

NOTES:

For details not shown see B0-5 and B7-1

Note: For Section X-X see "Westbound Typical Section No.1" sheet

PARTIAL TYPICAL SECTION

1:20

ALL DIMENSIONS ARE IN MILLIMETERS UNLESS OTHERWISE SHOWN

DESIGN OVERSIGHT
JOHN MOOK, BERNARD CHAN, JUAN F. CARPIO
SIGN OFF DATE

Rev. Date: 5-18-98

	BY	CHECKED
DESIGN	Jain	Desai
DETAILS	van Ryn/Zucchi/Mai	Jain
QUANTITIES	Liao	E. Nichol

PREPARED FOR THE STATE OF CALIFORNIA DEPARTMENT OF TRANSPORTATION

Jal Birdy
PROJECT ENGINEER

BRIDGE NO. 34-0006 L/R
KILOMETER POST 12.8

SAN FRANCISCO OAKLAND BAY BRIDGE
EAST SPAN SEISMIC SAFETY PROJECT

YBI TRANSITION STRUCTURES

WESTBOUND TYPICAL SECTION NO.2

ORIGINAL SCALE IN MILLIMETERS FOR REDUCED PLANS 0 10 20 30 40 50 60 70 80 90 100

CU 04251
EA 0120S1

DISREGARD PRINTS BEARING EARLIER REVISION DATES

REVISION DATES (PRELIMINARY STAGE ONLY) 9/13/07 01/31/08 3/31/08 8/19/09 5/30/02 2/14/03 3/31/06 10/27/06 1/24/07 6/28/07

SHEET 66 OF 209

FILE => 04-0120s1-34-006ri-k-ts02.dgn

USERNAME => trmikest DATE PLOTTED => 09-NOV-2009 TIME PLOTTED => 13:13

DIST.	COUNTY	ROUTE	KILOMETER POST TOTAL PROJECT	SHEET NO.	TOTAL SHEETS
04	SF	80	12.7/13.2	619	806

REGISTERED ENGINEER - CIVIL
6-23-08
PLANS APPROVAL DATE

REGISTERED PROFESSIONAL ENGINEER A.L. ELY No. 18880 Exp. 6-30-09 CIVIL STATE OF CALIFORNIA

The State of California or its officers or agents shall not be responsible for the accuracy or completeness of electronic copies of this plan sheet.

T.Y. LIN / MOFFATT & NICHOL
TWO HARRISON STREET
SAN FRANCISCO, CA 94105

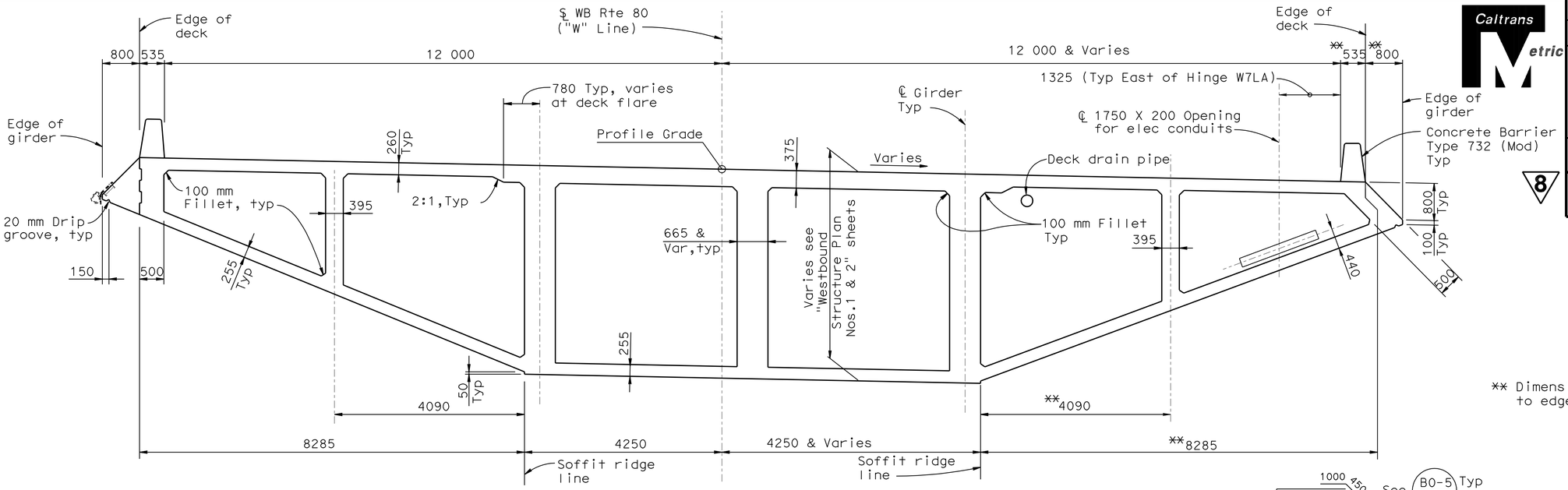

TYPICAL SECTION - HINGE W7LA TO 25 m WEST OF BENT W4L

1:50

** Dimension shown is perpendicular to edge of deck.

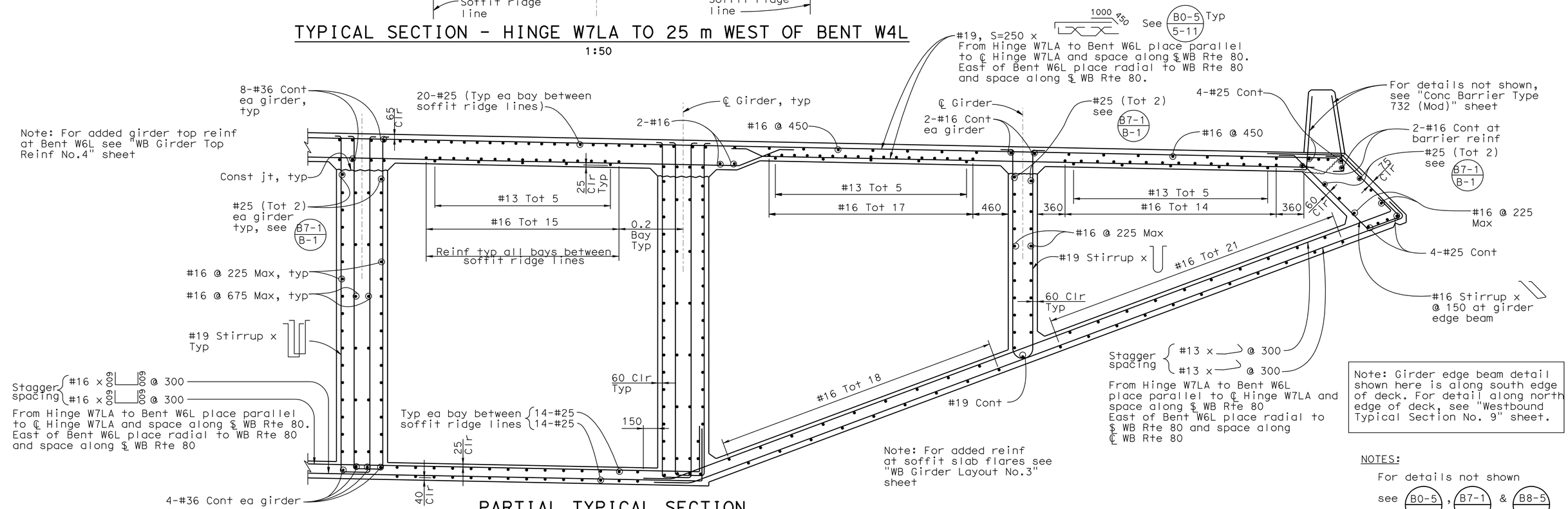

Note: Girder edge beam detail shown here is along south edge of deck. For detail along north edge of deck, see "Westbound Typical Section No. 9" sheet.

PARTIAL TYPICAL SECTION

1:25

NOTES:

For details not shown see B0-5, B7-1 & B8-5

8 **REVISED PER ADDENDUM No. 8 DATED NOVEMBER 12, 2009**

ALL DIMENSIONS ARE IN MILLIMETERS UNLESS OTHERWISE SHOWN

DESIGN OVERSIGHT
JOHN MOOK, BERNARD CHAN, JUAN F. CARPIO
SIGN OFF DATE

	BY	CHECKED
DESIGN	Dodd	Jain
DETAILS	van Ryn/Zucchi/Mai	Jain
QUANTITIES	Liao	E. Nichol

PREPARED FOR THE STATE OF CALIFORNIA DEPARTMENT OF TRANSPORTATION

Jal Birdy
PROJECT ENGINEER

BRIDGE NO. 34-0006 L/R
KILOMETER POST 12.8

SAN FRANCISCO OAKLAND BAY BRIDGE
EAST SPAN SEISMIC SAFETY PROJECT

YBI TRANSITION STRUCTURES

WESTBOUND TYPICAL SECTION NO.6

Rev. Date: 5-18-98

ORIGINAL SCALE IN MILLIMETERS FOR REDUCED PLANS 0 10 20 30 40 50 60 70 80 90 100

CU 04251
EA 0120S1

DISREGARD PRINTS BEARING EARLIER REVISION DATES

REVISION DATES (PRELIMINARY STAGE ONLY) 9/13/07 01/31/08 3/31/08 4/9/09 8/31/09 2/14/05 7/3/06 10/2/06 1/24/07 6/25/07

SHEET 70 OF 209

FILE => 04-0120s1-34-006r1-k-ts06.add

USERNAME => trmikes1 DATE PLOTTED => 09-NOV-2009 TIME PLOTTED => 13:14

DIST.	COUNTY	ROUTE	KILOMETER POST TOTAL PROJECT	SHEET NO.	TOTAL SHEETS
04	SF	80	12.7/13.2	620	806

Caltrans Metric

REGISTERED ENGINEER - CIVIL

6-23-08
PLANS APPROVAL DATE

REGISTERED PROFESSIONAL ENGINEER A.L. ELY No. 18880 Exp. 6-30-09 CIVIL STATE OF CALIFORNIA

8 The State of California or its officers or agents shall not be responsible for the accuracy or completeness of electronic copies of this plan sheet.

T.Y. LIN / MOFFATT & NICHOL
TWO HARRISON STREET
SAN FRANCISCO, CA 94105

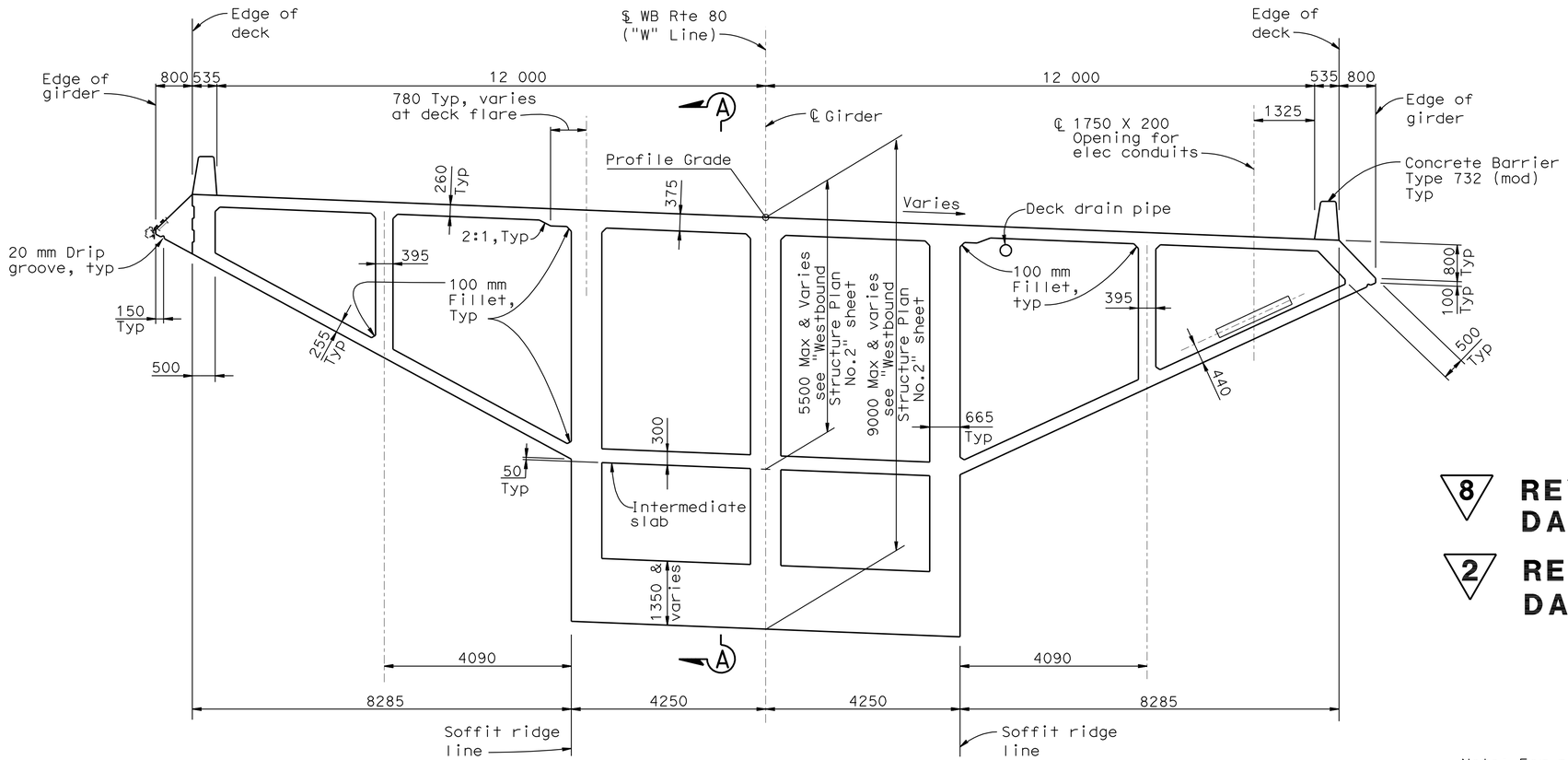

TYPICAL SECTION - 25 m WEST OF BENT W4L TO HINGE K CLOSURE

1:60

8 REVISED PER ADDENDUM No. 8 DATED NOVEMBER 12, 2009

2 REVISED PER ADDENDUM No. 2 DATED JANUARY 22, 2009

Note: For partial typical section see "Westbound Typical Section No.8" sheet

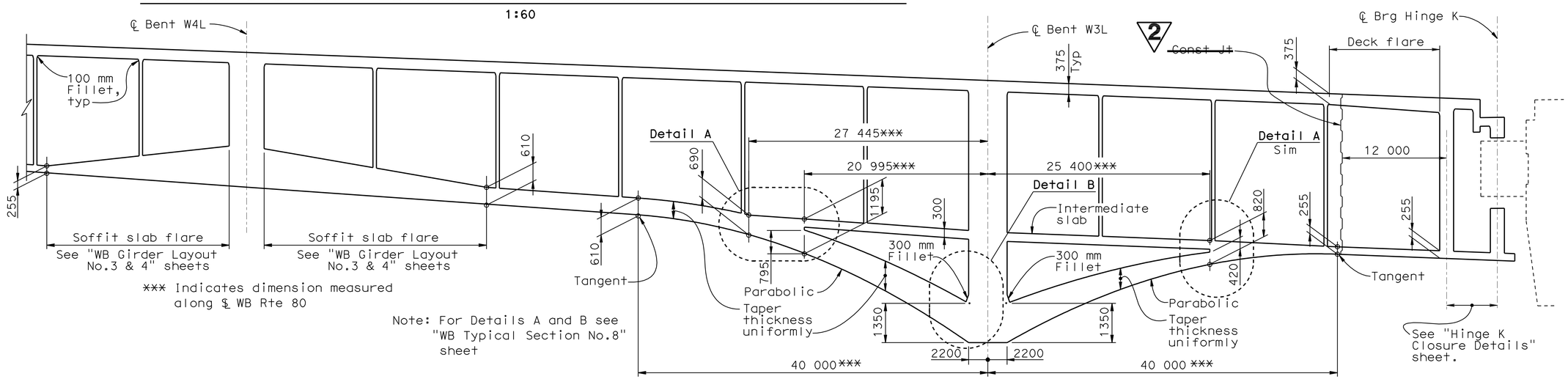

*** Indicates dimension measured along ℄ WB Rte 80

Note: For Details A and B see "WB Typical Section No.8" sheet

LONGITUDINAL SECTION A-A

No Scale

ALL DIMENSIONS ARE IN MILLIMETERS UNLESS OTHERWISE SHOWN

DESIGN OVERSIGHT
JOHN MOOK, BERNARD CHAN, JUAN F. CARPIO
SIGN OFF DATE

	BY	CHECKED
DESIGN	Dodd	Jain
DETAILS	van Ryn/Zucchi/Mai	Jain
QUANTITIES	Liao	E. Nichol

PREPARED FOR THE STATE OF CALIFORNIA DEPARTMENT OF TRANSPORTATION

Jal Birdy
PROJECT ENGINEER

BRIDGE NO. 34-0006 L/R
KILOMETER POST 12.8

SAN FRANCISCO OAKLAND BAY BRIDGE
EAST SPAN SEISMIC SAFETY PROJECT

YBI TRANSITION STRUCTURES

WESTBOUND TYPICAL SECTION NO.7

Rev. Date: 5-18-98

ORIGINAL SCALE IN MILLIMETERS FOR REDUCED PLANS 0 10 20 30 40 50 60 70 80 90 100

CU 04251
EA 0120S1

DISREGARD PRINTS BEARING EARLIER REVISION DATES

REVISION DATES (PRELIMINARY STAGE ONLY) 9/13/01 01/31/08 3/31/08 8/31/09 5/10/02 2/14/03 7/3/06 10/2/06 1/24/07 6/25/07

SHEET 71 OF 209

FILE => 04-0120s1-34-006r1-k-ts07.add

USERNAME => trmikes1 DATE PLOTTED => 09-NOV-2009 TIME PLOTTED => 13:14

DIST.	COUNTY	ROUTE	KILOMETER POST TOTAL PROJECT	SHEET NO.	TOTAL SHEETS
04	SF	80	12.7/13.2	621	806

REGISTERED ENGINEER - CIVIL

6-23-08
PLANS APPROVAL DATE

REGISTERED PROFESSIONAL ENGINEER A.L. ELY No. 18880 Exp. 6-30-09 CIVIL STATE OF CALIFORNIA

The State of California or its officers or agents shall not be responsible for the accuracy or completeness of electronic copies of this plan sheet.

8

T.Y. LIN / MOFFATT & NICHOL
TWO HARRISON STREET
SAN FRANCISCO, CA 94105

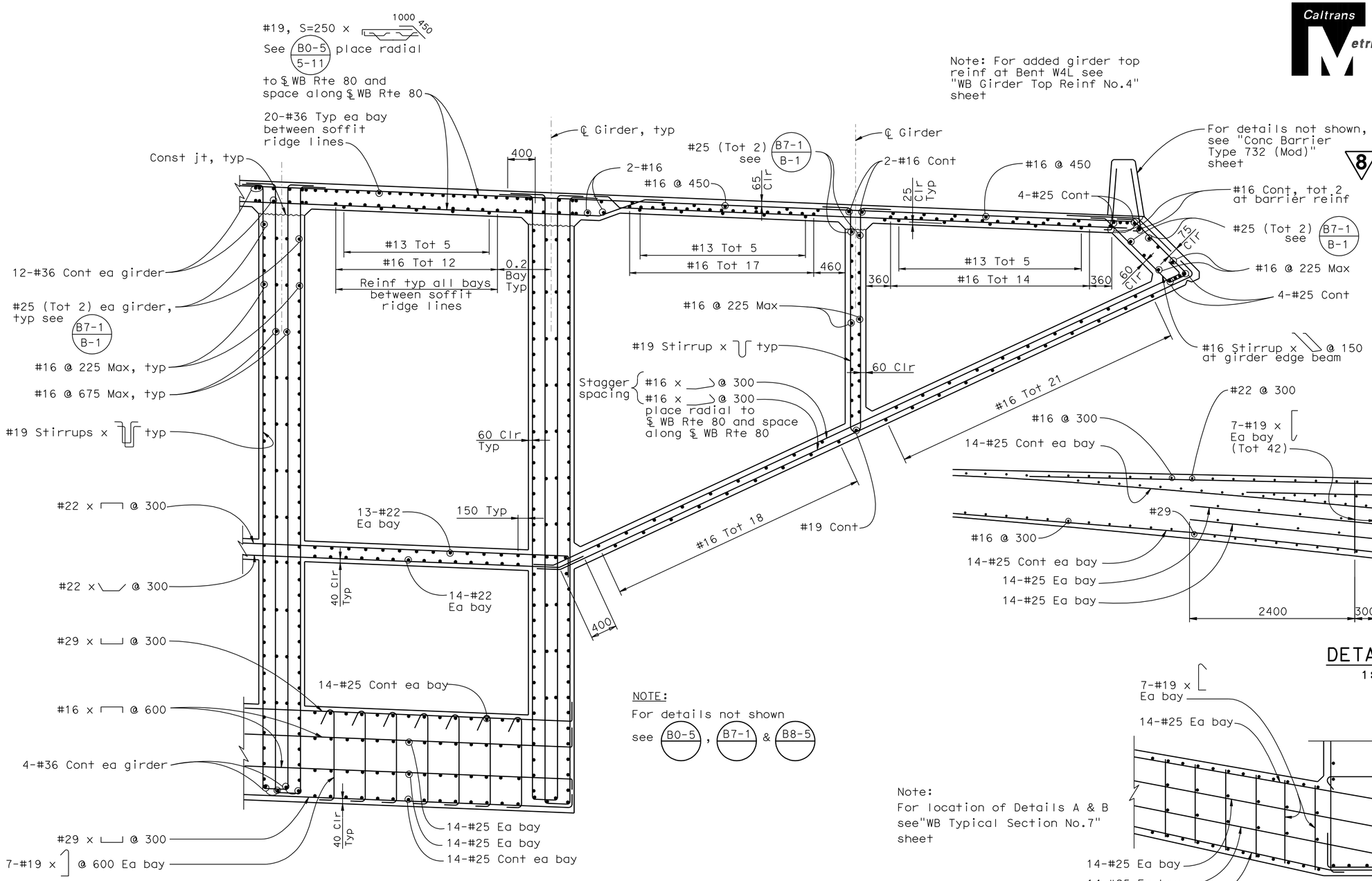

Note: For added girder top reinf at Bent W4L see "WB Girder Top Reinf No.4" sheet

Note: Girder edge beam detail shown here is along south edge of deck. For detail along north edge of deck, see "Westbound Typical Section No. 9" sheet.

NOTE:
For details not shown see B0-5, B7-1 & B8-5

Note:
For location of Details A & B see "WB Typical Section No.7" sheet

PARTIAL TYPICAL SECTION - 25 m WEST OF BENT W4L TO HINGE K CLOSURE
1:30

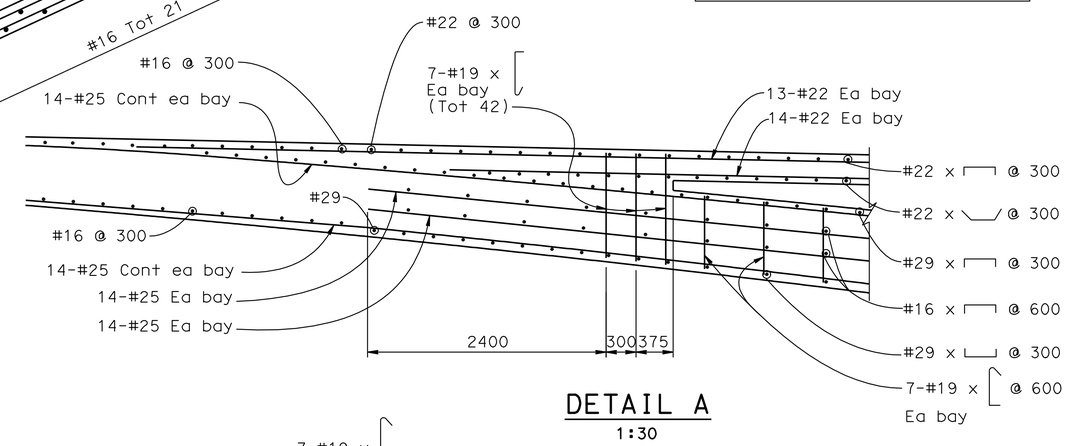

DETAIL A
1:30

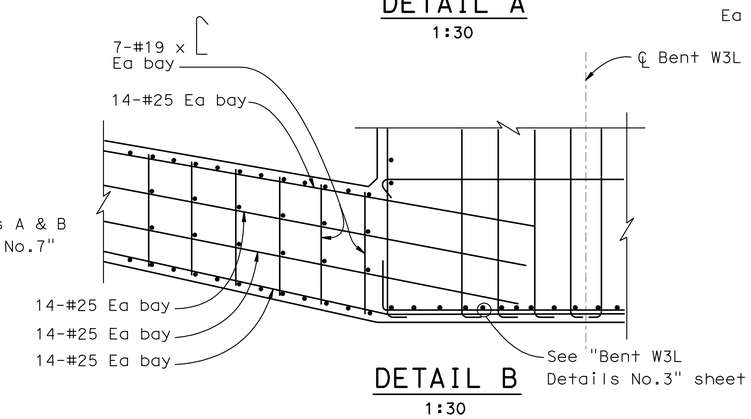

DETAIL B
1:30

8 **REVISED PER ADDENDUM No. 8 DATED NOVEMBER 12, 2009**

ALL DIMENSIONS ARE IN MILLIMETERS UNLESS OTHERWISE SHOWN

SAN FRANCISCO OAKLAND BAY BRIDGE
EAST SPAN SEISMIC SAFETY PROJECT

YBI TRANSITION STRUCTURES

WESTBOUND TYPICAL SECTION NO.8

DESIGN OVERSIGHT
JOHN MOOK, BERNARD CHAN, JUAN F. CARPIO
SIGN OFF DATE

	BY	CHECKED
DESIGN	Dodd	Jain
DETAILS	van Ryn/Zucchi/Mai	Jain
QUANTITIES	Liao	E. Nichol

PREPARED FOR THE STATE OF CALIFORNIA DEPARTMENT OF TRANSPORTATION

Jal Birdy
PROJECT ENGINEER

BRIDGE NO. 34-0006 L/R
KILOMETER POST 12.8

Rev. Date: 5-18-98

ORIGINAL SCALE IN MILLIMETERS FOR REDUCED PLANS 0 10 20 30 40 50 60 70 80 90 100

CU 04251
EA 0120S1

DISREGARD PRINTS BEARING EARLIER REVISION DATES

REVISION DATES (PRELIMINARY STAGE ONLY): 9/13/07 01/31/08 3/31/08 4/9/09 8/31/09 2/14/03 3/3/06 10/12/06 1/24/07 6/25/07

SHEET 72 OF 209

FILE => 04-0120s1-34-006rl-k-ts08.add

USERNAME => ttmikest DATE PLOTTED => 09-NOV-2009 TIME PLOTTED => 13:14

DIST.	COUNTY	ROUTE	KILOMETER POST TOTAL PROJECT	SHEET NO.	TOTAL SHEETS
04	SF	80	12.7/13.2	621A	806

Caltrans Metric

REGISTERED ENGINEER - CIVIL

PLANS APPROVAL DATE

REGISTERED PROFESSIONAL ENGINEER A.L. ELY No. 18880 Exp. 6-30-09 CIVIL STATE OF CALIFORNIA

8

The State of California or its officers or agents shall not be responsible for the accuracy or completeness of electronic copies of this plan sheet.

T.Y. LIN / MOFFATT & NICHOL
TWO HARRISON STREET
SAN FRANCISCO, CA 94105

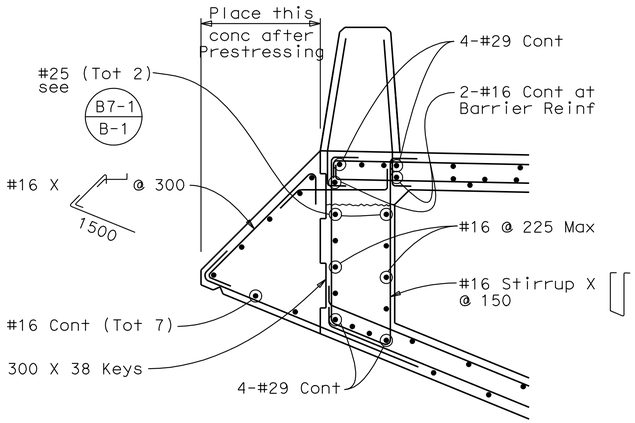

GIRDER EDGE BEAM DETAIL
ALONG NORTH EDGE OF DECK,
HINGE W7LA TO HINGE K CLOSURE

DETAIL A
1:20

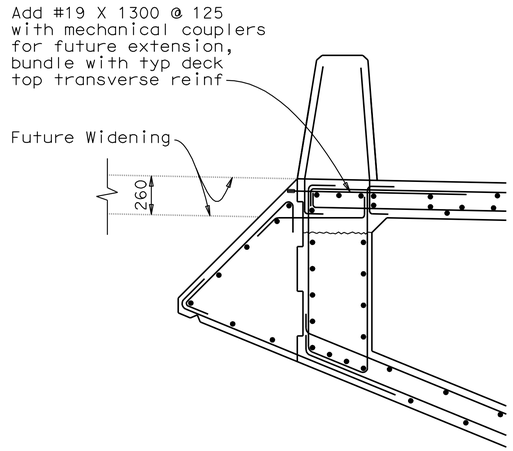

ADDED REINFORCING BARS
ALONG NORTH EDGE OF DECK
STA 53+58.00 TO STA 54+97.40

DETAIL B
1:20

8 **ADDED PER ADDENDUM No. 8 DATED NOVEMBER 12, 2009**

ALL DIMENSIONS ARE IN
MILLIMETERS UNLESS OTHERWISE SHOWN

SAN FRANCISCO OAKLAND BAY BRIDGE
EAST SPAN SEISMIC SAFETY PROJECT

YBI TRANSITION STRUCTURES

WESTBOUND TYPICAL SECTION NO.9

DESIGN OVERSIGHT
JUAN F. CARPIO
SIGN OFF DATE

	BY	CHECKED
DESIGN	Dodd	Lee
DETAILS	Samson	Jain
QUANTITIES	Jain	Birdy

PREPARED FOR THE
STATE OF CALIFORNIA
DEPARTMENT OF TRANSPORTATION

Jal Birdy
PROJECT ENGINEER

BRIDGE NO. 34-0006 L/R
KILOMETER POST 12.8

Rev. Date: 5-18-98

ORIGINAL SCALE IN MILLIMETERS FOR REDUCED PLANS 0 10 20 30 40 50 60 70 80 90 100

CU 04251
EA 0120S1

DISREGARD PRINTS BEARING EARLIER REVISION DATES

REVISION DATES (PRELIMINARY STAGE ONLY) 4/3/09 8/19/09

SHEET 72A OF 209

FILE => 04-0120s1-34-006rl-k-ts08a.add

USERNAME => tmikesl DATE PLOTTED => 09-NOV-2009 TIME PLOTTED => 13:15

DIST.	COUNTY	ROUTE	KILOMETER POST TOTAL PROJECT	SHEET NO.	TOTAL SHEETS
04	SF	80	12.7/13.2	633	806

REGISTERED ENGINEER - CIVIL

6-23-08
PLANS APPROVAL DATE

REGISTERED PROFESSIONAL ENGINEER A.L. ELY No. 18880 Exp. 6-30-09 CIVIL STATE OF CALIFORNIA

The State of California or its officers or agents shall not be responsible for the accuracy or completeness of electronic copies of this plan sheet.

T.Y. LIN / MOFFATT & NICHOL
TWO HARRISON STREET
SAN FRANCISCO, CA 94105

Caltrans Metric

8

LEGEND

500 Indicates girder stem width in mm

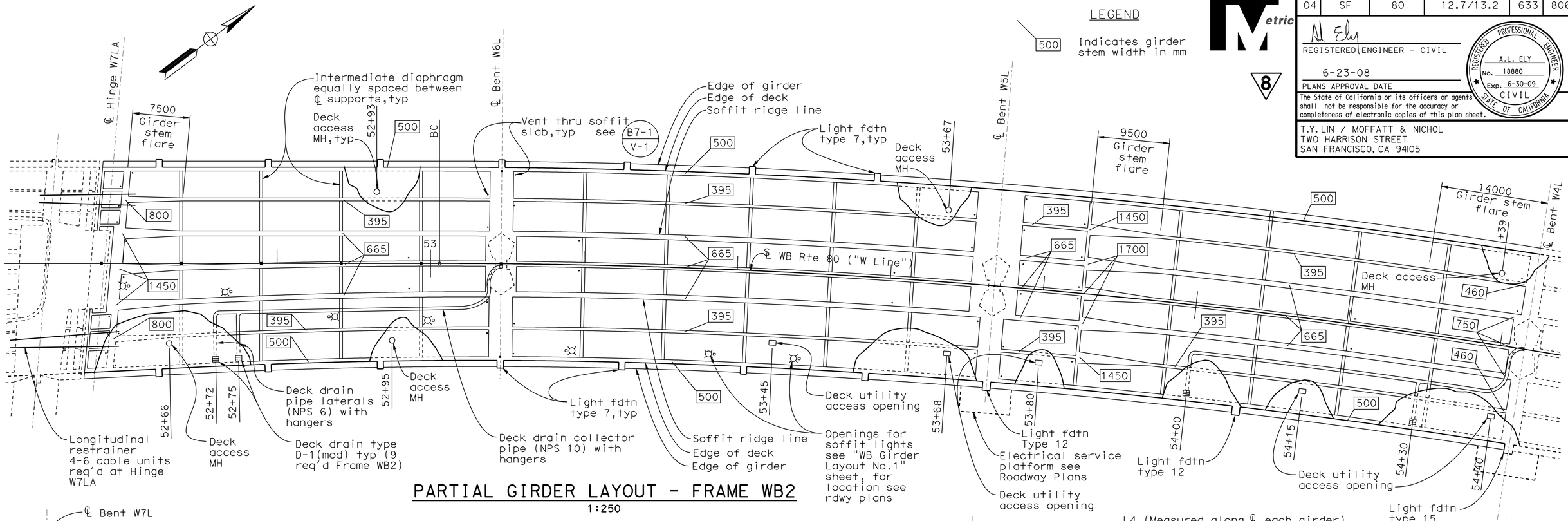

PARTIAL GIRDER LAYOUT - FRAME WB2

1:250

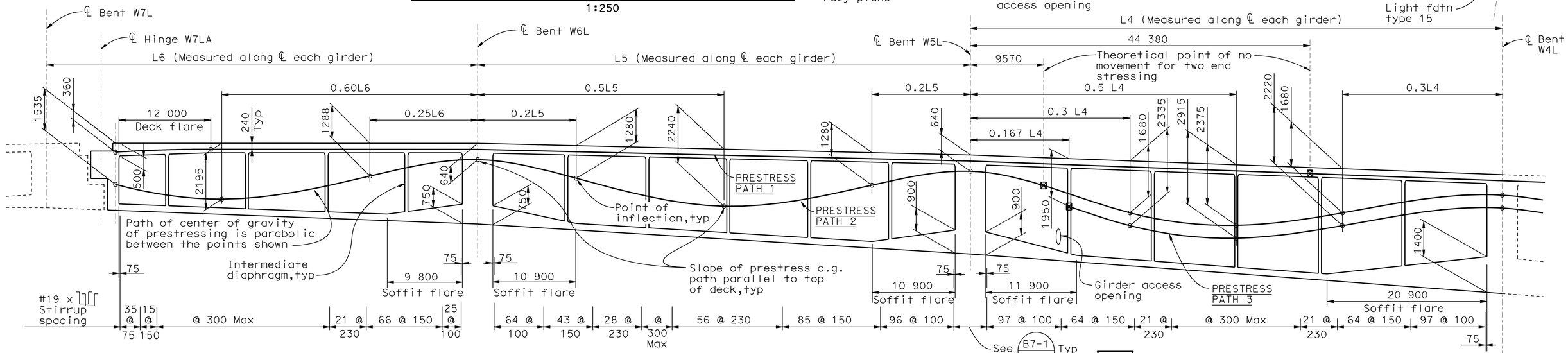

Note:
Soffit slab flares are between soffit ridge lines only.

PARTIAL LONGITUDINAL SECTION - FRAME WB2
GIRDERS BETWEEN SOFFIT RIDGE LINES

No Scale

ALL DIMENSIONS ARE IN MILLIMETERS UNLESS OTHERWISE SHOWN

8

REVISED PER ADDENDUM No. 8 DATED NOVEMBER 12, 2009

SAN FRANCISCO OAKLAND BAY BRIDGE
EAST SPAN SEISMIC SAFETY PROJECT

YBI TRANSITION STRUCTURES

WESTBOUND GIRDER LAYOUT NO.2

DESIGN OVERSIGHT
JOHN MOOK, BERNARD CHAN, JUAN F. CARPIO
SIGN OFF DATE

Rev. Date: 5-18-98

DESIGN	BY Cavafian	CHECKED Shangkuan
DETAILS	BY van Ryn/Zucchi/Mai	CHECKED Jain
QUANTITIES	BY Liao	CHECKED E. Nichol

PREPARED FOR THE STATE OF CALIFORNIA DEPARTMENT OF TRANSPORTATION

Jal Birdy
PROJECT ENGINEER

BRIDGE NO. 34-0006 L/R
KILOMETER POST 12.8

CU 04251
EA 0120S1

ORIGINAL SCALE IN MILLIMETERS FOR REDUCED PLANS 0 10 20 30 40 50 60 70 80 90 100

DISREGARD PRINTS BEARING EARLIER REVISION DATES

REVISION DATES (PRELIMINARY STAGE ONLY) 9/13/07 01/31/08 3/31/08 4/3/09 4/28/09 5/22/09 8/31/09 10/27/06 1/24/07 6/28/07

SHEET 84 OF 209

FILE => 04-0120s1-34-006r1-1-g_1o03.add

USERNAME => trmikesi DATE PLOTTED => 09-NOV-2009 TIME PLOTTED => 13:15

DIST.	COUNTY	ROUTE	KILOMETER POST TOTAL PROJECT	SHEET NO.	TOTAL SHEETS
04	SF	80	12.7/13.2	634	806

Caltrans Metric

REGISTERED ENGINEER - CIVIL

6-23-08

PLANS APPROVAL DATE

REGISTERED PROFESSIONAL ENGINEER A.L. ELY No. 18880 Exp. 6-30-09 CIVIL STATE OF CALIFORNIA

The State of California or its officers or agents shall not be responsible for the accuracy or completeness of electronic copies of this plan sheet.

T.Y. LIN / MOFFATT & NICHOL
TWO HARRISON STREET
SAN FRANCISCO, CA 94105

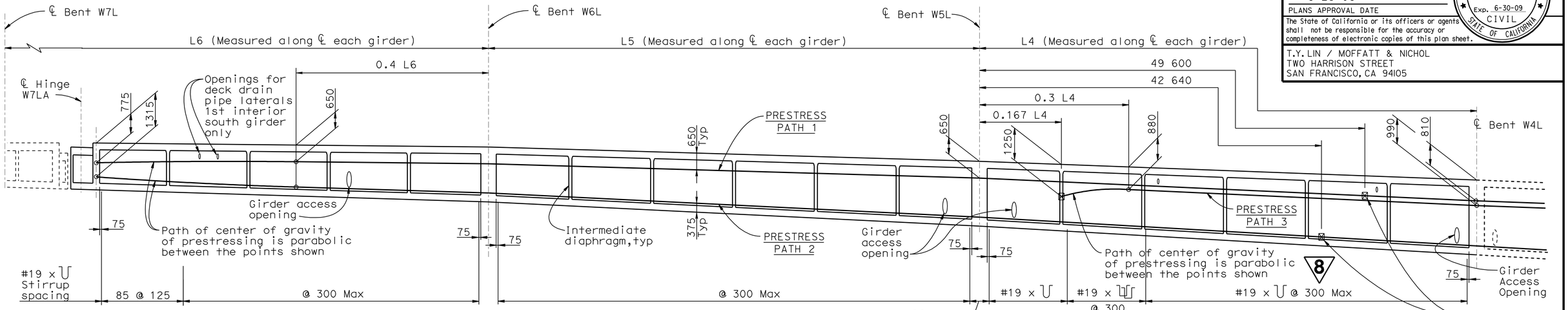

See B7-1 / S-3 Typ

PARTIAL LONGITUDINAL SECTION - FRAME WB2
GIRDERS OUTSIDE SOFFIT RIDGE LINES

No Scale

HINGE DEAD LOAD + PRESTRESS REACTIONS

Hinge W7LA	Hinge K
23575 KN	1105 KN **

** Target value just after closure and counterweight removal

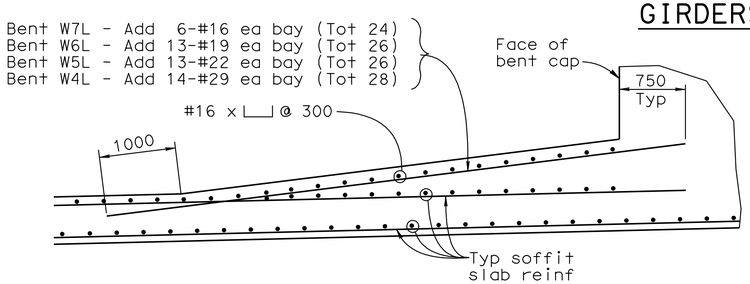

SOFFIT SLAB FLARE DETAIL

No Scale

TIME DEPENDENT CAMBER VALUES ("C") AT HINGE K CLOSURE

Time Between Casting & Stressing, Days	Time Between Stressing & Closure, Days				
	30	60	90	120	150
10	15	28	33	35	37
20	21	35	40	43	45
30	24	38	43	46	48
60	27	40	45	48	50
90	28	41	45	48	50

NOTES:

1. Time Dependent Camber "C" values shown represent amount that top of deck is to be above profile grade at time of concrete placement. Values shown do not include allowance for falsework settlement.
2. Time Dependent Camber "C" values shown are to be adjusted after Contractor submits concrete modulus, creep and shrinkage test results. Values shown assume counterweight is placed 20 days after stressing.

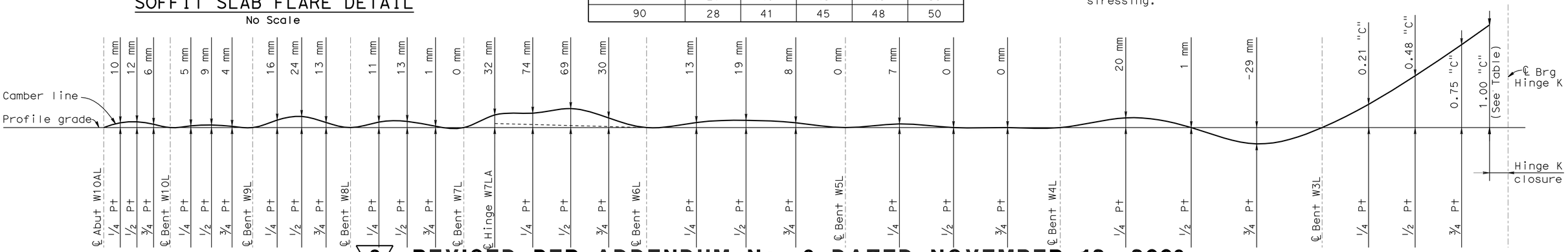

Note: Camber diagram does not include allowance for falsework settlement

8 **REVISED PER ADDENDUM No. 8 DATED NOVEMBER 12, 2009**

WB GIRDER CAMBER DIAGRAM

No Scale

ALL DIMENSIONS ARE IN MILLIMETERS UNLESS OTHERWISE SHOWN

DESIGN OVERSIGHT
JOHN MOOK, BERNARD CHAN, JUAN F. CARPIO
March 3, 2008
SIGN OFF DATE

Rev. Date: 5-18-98

	BY	CHECKED
DESIGN	Cavafian	Shangkuan
DETAILS	van Ryn/Zucchi/Mai	Jain
QUANTITIES	Liao	E. Nichol

PREPARED FOR THE STATE OF CALIFORNIA DEPARTMENT OF TRANSPORTATION

Jal Birdy
PROJECT ENGINEER

BRIDGE NO. 34-0006 L/R
KILOMETER POST 12.8

SAN FRANCISCO OAKLAND BAY BRIDGE
EAST SPAN SEISMIC SAFETY PROJECT

YBI TRANSITION STRUCTURES

WESTBOUND GIRDER LAYOUT NO.3

ORIGINAL SCALE IN MILLIMETERS FOR REDUCED PLANS 0 10 20 30 40 50 60 70 80 90 100

CU 04251
EA 0120S1

DISREGARD PRINTS BEARING EARLIER REVISION DATES

REVISION DATES (PRELIMINARY STAGE ONLY) 9/13/01 01/24/08 3/3/08 3/26/02 5/30/02 2/14/03 1/3/06 10/4/06 1/24/07 6/28/07

SHEET 85 OF 209

FILE => 04-0120s1-34-006r1-1-g_lo04.add

March 3, 2008

USERNAME => trmikest DATE PLOTTED => 09-NOV-2009 TIME PLOTTED => 13:15

DIST.	COUNTY	ROUTE	KILOMETER POST TOTAL PROJECT	SHEET NO.	TOTAL SHEETS
04	SF	80	12.7/13.2	636	806

REGISTERED ENGINEER - CIVIL

6-23-08
PLANS APPROVAL DATE

REGISTERED PROFESSIONAL ENGINEER A.L. ELY No. 18880 Exp. 6-30-09 CIVIL STATE OF CALIFORNIA

The State of California or its officers or agents shall not be responsible for the accuracy or completeness of electronic copies of this plan sheet.

T.Y. LIN / MOFFATT & NICHOL
TWO HARRISON STREET
SAN FRANCISCO, CA 94105

Caltrans Metric

8

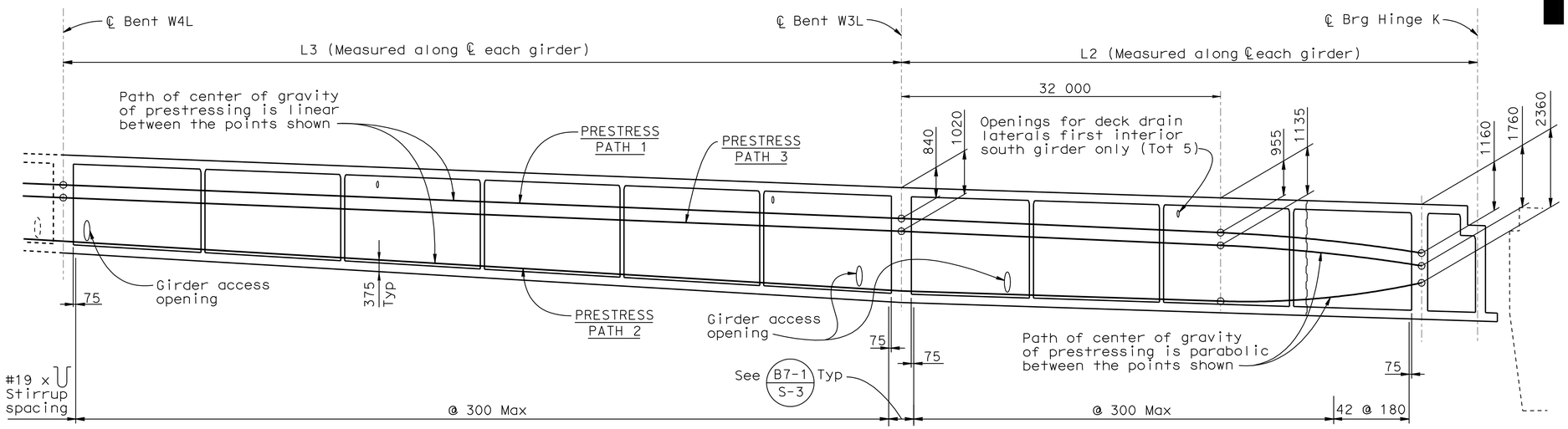

PARTIAL LONGITUDINAL SECTION - FRAME WB2
GIRDERS OUTSIDE SOFFIT RIDGE LINES

No Scale

PRESTRESSING TABLE

Location			PJACK	Number of girders	Initial stress coefficient	f'c @ 28 days	f'ci @ time of stressing
Frame WB2	Girders between soffit ridge lines	Path 1	107 050 kN	3	0.897	46 MPa	42 MPa
		Path 2	137 650 kN		0.805		
		Path 3	91 750 kN		0.615		
	Girders outside soffit ridge lines	Path 1	20 400 kN	2	0.894		
		Path 2	20 400 kN		0.889		
		Path 3	20 400 kN		0.852		
	Deck edge beams		11 600 kN	2	0.899		

PRESTRESSING NOTES

1860 mpa LOW RELAXATION STRAND

PJACK = SEE PRESTRESSING TABLE

ANCHOR SET = 10 mm

CONCRETE: SEE PRESTRESSING TABLE

CONTRACTOR SHALL SUBMIT ELONGATION CALCULATIONS BASED ON AN INITIAL STRESS AT [X] EQUAL TO THE INITIAL STRESS COEFFICIENT GIVEN IN THE PRESTRESSING TABLE TIMES THE JACKING STRESS

STRESSING SHALL BE PERFORMED FROM BOTH ENDS EXCEPT ONE END STRESSING FROM HINGE K ANCHORAGE FOR PATH 3.

FOR GIRDERS OUTSIDE SOFFIT RIDGE LINES AND FOR DECK EDGE BEAMS PRESTRESS FORCE (Pjack)) SHALL BE EQUALLY DISTRIBUTED BETWEEN GIRDERS, FOR GIRDERS BETWEEN SOFFIT RIDGE LINES DISTRIBUTION OF PRESTRESS FORCE (Pjack) BETWEEN GIRDERS SHALL NOT EXCEED THE RATIO OF 3:2. MAXIMUM FINAL FORCE VARIATION BETWEEN GIRDERS SHALL NOT EXCEED 3000 kN SEE "GIRDER PRESTRESS DETAILS" SHEET.

DESIGN BASED ON FRICTION CURVATURE COEFFICIENT (U) = 0.20 AND FRICTION WOBBLE COEFFICIENT (K) = 0.0007/m

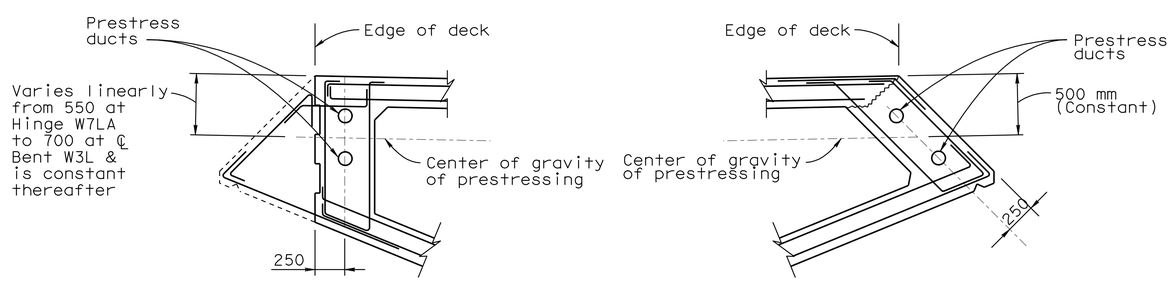

NORTH EDGE OF DECK

SOUTH EDGE OF DECK

DECK EDGE BEAM DETAIL

No Scale

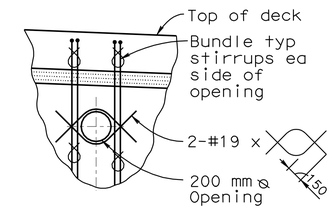

AT DECK DRAIN PIPE LATERALS

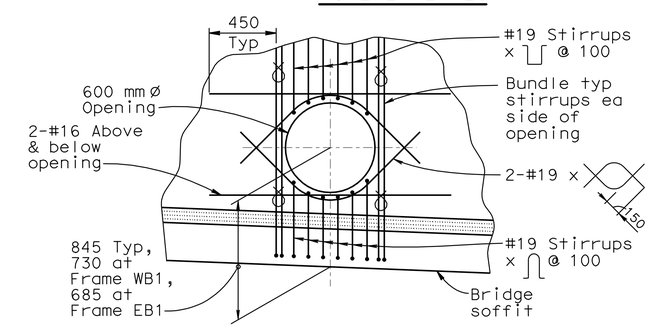

AT GIRDER ACCESS OPENING FOR GIRDER OUTSIDE SOFFIT RIDGE LINES

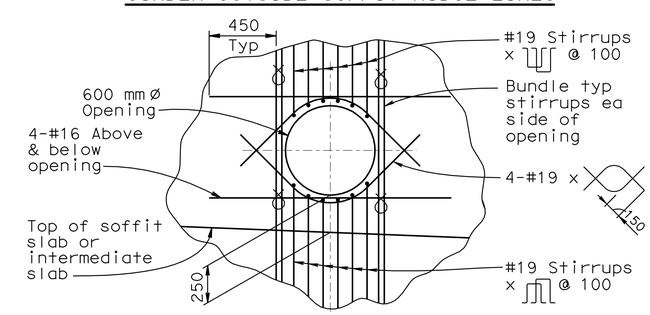

AT GIRDER ACCESS OPENING FOR GIRDER BETWEEN SOFFIT RIDGE LINES

OPENINGS THRU GIRDER STEM

8 **REVISED PER ADDENDUM No. 8 DATED NOVEMBER 12, 2009**

ALL DIMENSIONS ARE IN MILLIMETERS UNLESS OTHERWISE SHOWN

SAN FRANCISCO OAKLAND BAY BRIDGE
EAST SPAN SEISMIC SAFETY PROJECT

YBI TRANSITION STRUCTURES

WESTBOUND GIRDER LAYOUT NO.5

DESIGN OVERSIGHT
JOHN MOOK, BERNARD CHAN, JUAN F. CARPIO

SIGN OFF DATE

Rev. Date: 5-18-98

	BY	CHECKED
DESIGN	Cavafian	Shangkuan
DETAILS	van Ryn/Zucchi/Mai	Jain
QUANTITIES	Liao	E. Nichol

PREPARED FOR THE STATE OF CALIFORNIA DEPARTMENT OF TRANSPORTATION

Jal Birdy
PROJECT ENGINEER

BRIDGE NO. 34-0006 L/R
KILOMETER POST 12.8

CU 04251
EA 0120S1

ORIGINAL SCALE IN MILLIMETERS FOR REDUCED PLANS 0 10 20 30 40 50 60 70 80 90 100

DISREGARD PRINTS BEARING EARLIER REVISION DATES

REVISION DATES (PRELIMINARY STAGE ONLY): 9/13/01 01/24/08 3/3/08 3/26/02 5/28/02 2/24/03 7/3/06 10/27/06 1/24/07 6/25/07

SHEET 87 OF 209

FILE => 04-0120s1-34-006r1-1-g_1o06.add

USERNAME => trmikesl DATE PLOTTED => 09-NOV-2009 TIME PLOTTED => 13:15

DIST.	COUNTY	ROUTE	KILOMETER POST TOTAL PROJECT	SHEET NO.	TOTAL SHEETS
04	SF	80	12.7/13.2	639	806

Caltrans Metric

REGISTERED ENGINEER - CIVIL

6-23-08

PLANS APPROVAL DATE

REGISTERED PROFESSIONAL ENGINEER A.L. ELY No. 18880 Exp. 6-30-09 CIVIL STATE OF CALIFORNIA

The State of California or its officers or agents shall not be responsible for the accuracy or completeness of electronic copies of this plan sheet.

T.Y. LIN / MOFFATT & NICHOL
TWO HARRISON STREET
SAN FRANCISCO, CA 94105

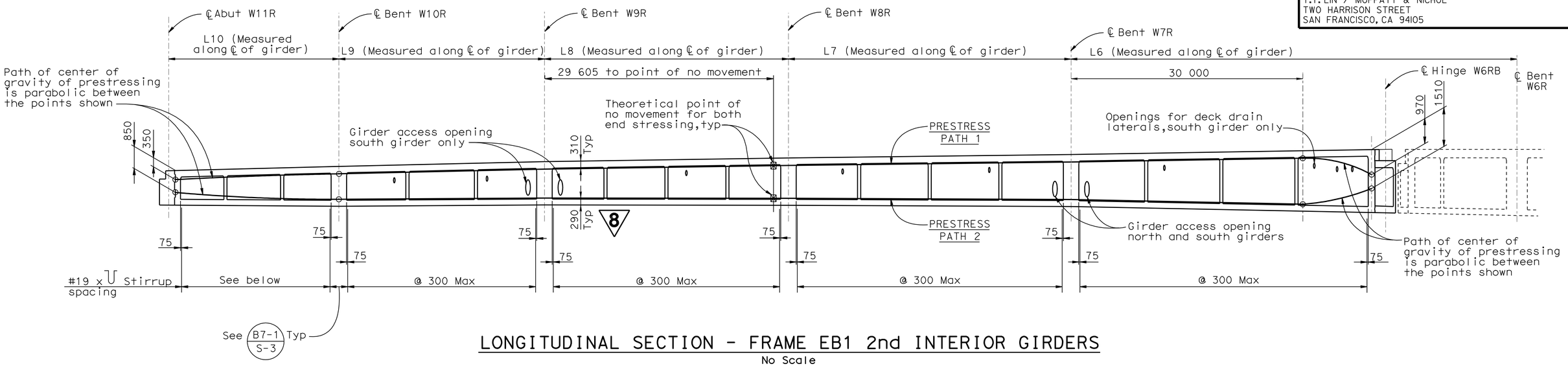

LONGITUDINAL SECTION - FRAME EB1 2nd INTERIOR GIRDERS

No Scale

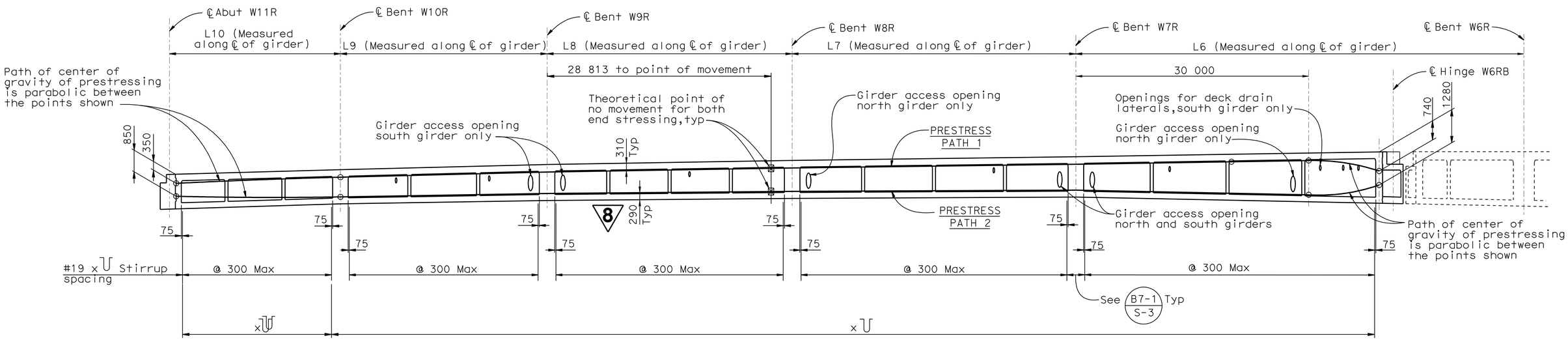

LONGITUDINAL SECTION - FRAME EB1 1st INTERIOR GIRDERS

No Scale

Note: The 1st interior girder is the interior girder nearest to the edge of deck and the 2nd interior girder is the adjacent interior girder

REVISED PER ADDENDUM No. 8 DATED NOVEMBER 12, 2009

ALL DIMENSIONS ARE IN MILLIMETERS UNLESS OTHERWISE SHOWN

DESIGN OVERSIGHT
JOHN MOOK, BERNARD CHAN, JUAN F. CARPIO
March 3, 2008
SIGN OFF DATE

Rev. Date: 5-18-98

	BY	CHECKED
DESIGN	Cavafian	Shangkuan
DETAILS	van Ryn/Zucchi/Mai	Jain
QUANTITIES	Liao	E. Nichol

ORIGINAL SCALE IN MILLIMETERS FOR REDUCED PLANS 0 10 20 30 40 50 60 70 80 90 100

PREPARED FOR THE STATE OF CALIFORNIA DEPARTMENT OF TRANSPORTATION

Jal Birdy
PROJECT ENGINEER

CU 04251
EA 0120S1

BRIDGE NO. 34-0006 L/R
KILOMETER POST 12.8

SAN FRANCISCO OAKLAND BAY BRIDGE
EAST SPAN SEISMIC SAFETY PROJECT

YBI TRANSITION STRUCTURES

EASTBOUND GIRDER LAYOUT NO.2

DISREGARD PRINTS BEARING EARLIER REVISION DATES

REVISION DATES (PRELIMINARY STAGE ONLY): 9/13/01 01/31/08 3/3/08 3/26/02 5/30/02 2/14/03 1/3/06 10/2/06 1/24/07 6/25/07

SHEET 90 OF 209

FILE => 04-0120s1-34-006r1-1-g_lo09.add

USERNAME => trmikest DATE PLOTTED => 09-NOV-2009 TIME PLOTTED => 13:16

DIST.	COUNTY	ROUTE	KILOMETER POST TOTAL PROJECT	SHEET NO.	TOTAL SHEETS
04	SF	80	12.7/13.2	645	806

Caltrans Metric

REGISTERED ENGINEER - CIVIL

6-23-08
PLANS APPROVAL DATE

REGISTERED PROFESSIONAL ENGINEER A.L. ELY No. 18880 Exp. 6-30-09 CIVIL STATE OF CALIFORNIA

The State of California or its officers or agents shall not be responsible for the accuracy or completeness of electronic copies of this plan sheet.

T.Y. LIN / MOFFATT & NICHOL
TWO HARRISON STREET
SAN FRANCISCO, CA 94105

8

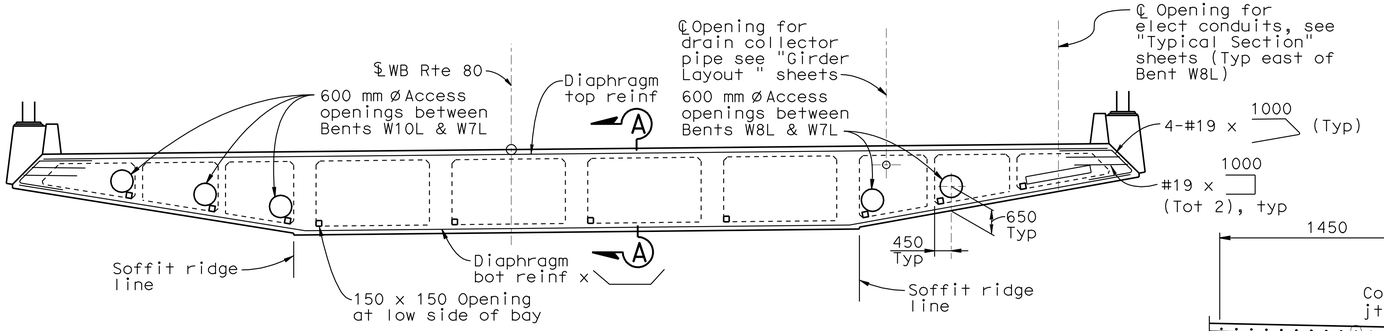

INTERMEDIATE DIAPHRAGM ELEVATION - FRAME WB1

1:80

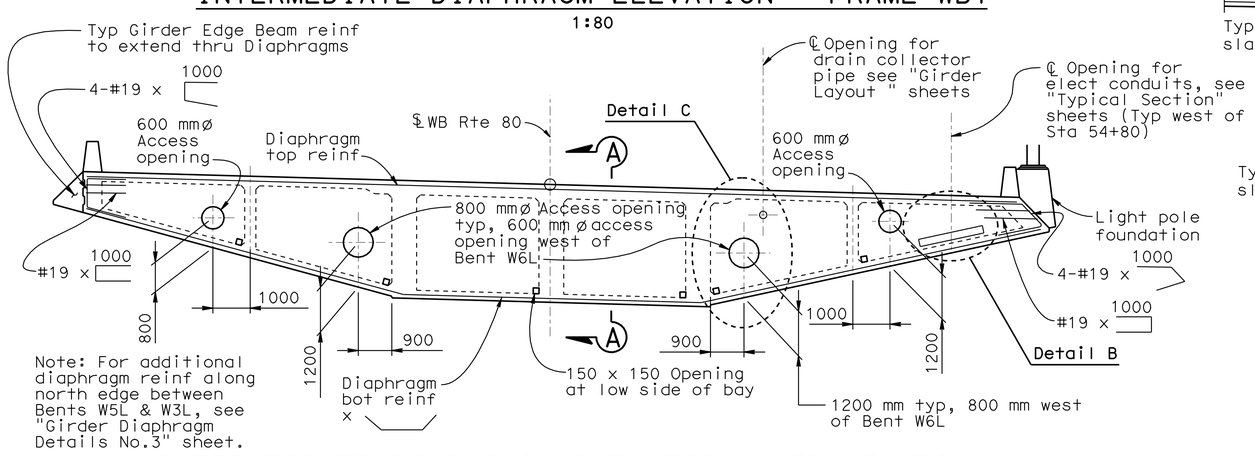

INTERMEDIATE DIAPHRAGM ELEVATION - FRAME WB2

1:80

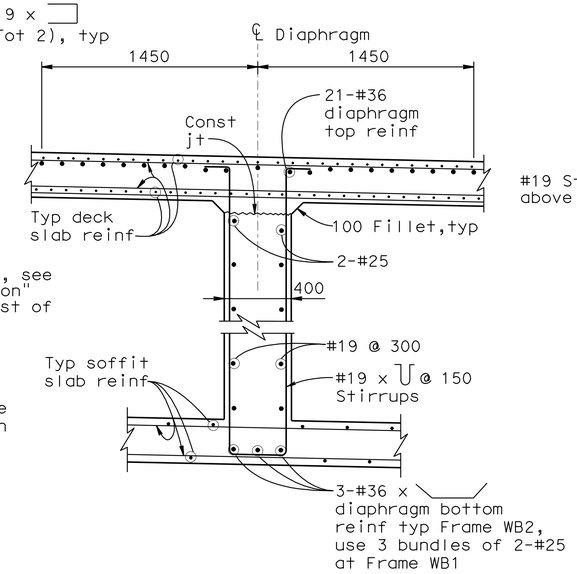

SECTION A-A

1:20

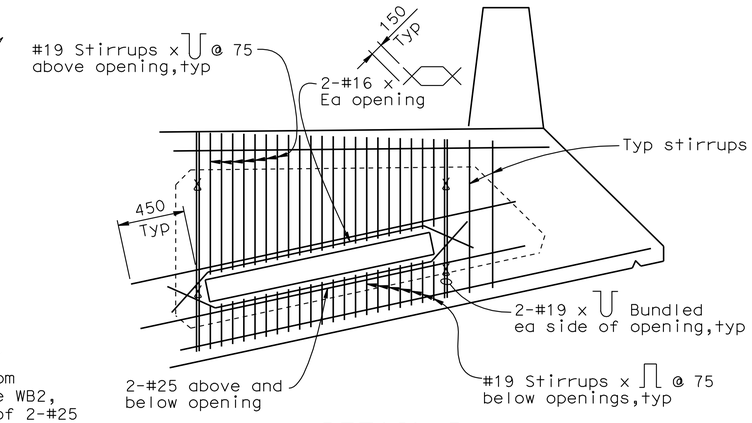

DETAIL B

(Typ reinf at openings for conduits)

1:20

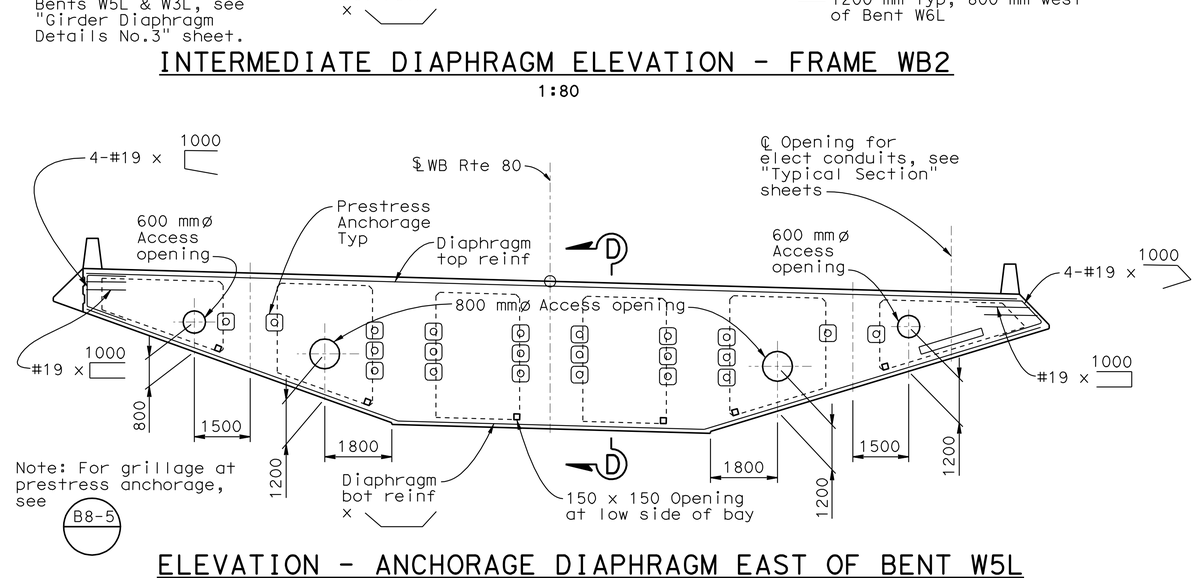

ELEVATION - ANCHORAGE DIAPHRAGM EAST OF BENT W5L

1:80

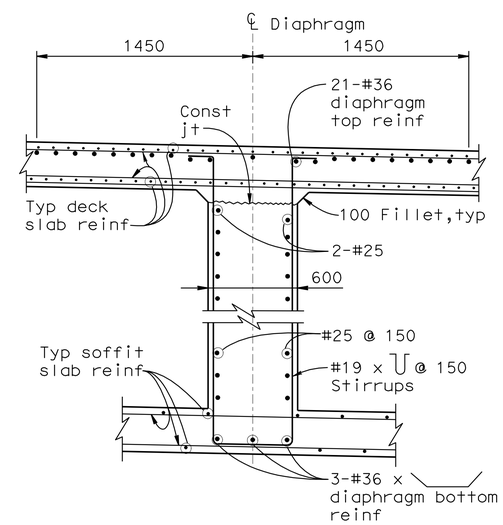

SECTION D-D

1:20

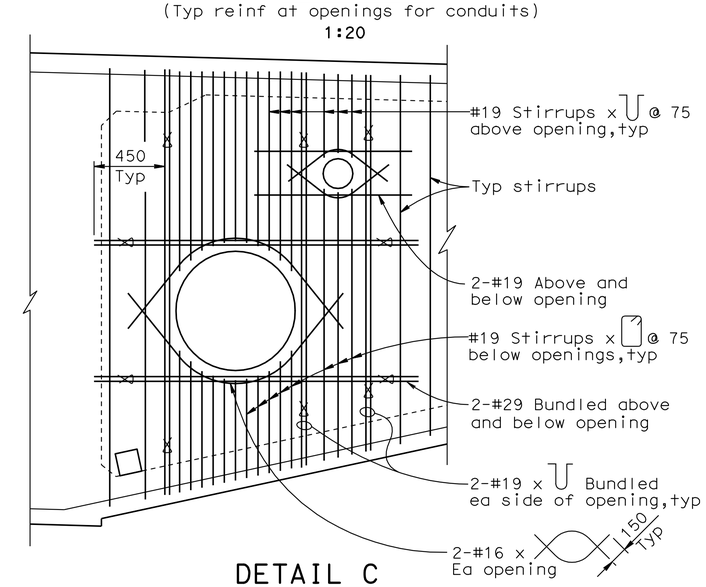

DETAIL C

(Typ reinf at circular openings)

1:20

8 **REVISED PER ADDENDUM No. 8 DATED NOVEMBER 12, 2009**

ALL DIMENSIONS ARE IN MILLIMETERS UNLESS OTHERWISE SHOWN

DESIGN OVERSIGHT
JOHN MOOK, BERNARD CHAN, JUAN F. CARPIO
SIGN OFF DATE

Rev. Date: 5-18-98

	BY	CHECKED
DESIGN	Wang	Greer
DETAILS	van Ryn/Zucchi/Mai	Jain
QUANTITIES	Liao	E. Nichol

PREPARED FOR THE STATE OF CALIFORNIA DEPARTMENT OF TRANSPORTATION

Jal Birdy
PROJECT ENGINEER

BRIDGE NO. 34-0006 L/R
KILOMETER POST 12.8

SAN FRANCISCO OAKLAND BAY BRIDGE
EAST SPAN SEISMIC SAFETY PROJECT

YBI TRANSITION STRUCTURES

GIRDER DIAPHRAGM DETAILS NO.1

ORIGINAL SCALE IN MILLIMETERS FOR REDUCED PLANS 0 10 20 30 40 50 60 70 80 90 100

CU 04251
EA 0120S1

DISREGARD PRINTS BEARING EARLIER REVISION DATES

REVISION DATES (PRELIMINARY STAGE ONLY) 9/13/07 01/31/08 3/31/08 8/18/09 8/31/09 2/14/03 1/3/06 10/2/06 1/24/07 6/25/07

SHEET 96 OF 209

FILE => 04-0120s1-34-006r1-1-gdt02.add

USERNAME => trmikes1 DATE PLOTTED => 09-NOV-2009 TIME PLOTTED => 13:16

DIST.	COUNTY	ROUTE	KILOMETER POST TOTAL PROJECT	SHEET NO.	TOTAL SHEETS
04	SF	80	12.7/13.2	646	806

Caltrans Metric

REGISTERED ENGINEER - CIVIL

6-23-08
PLANS APPROVAL DATE

REGISTERED PROFESSIONAL ENGINEER A.L. ELY No. 18880 Exp. 6-30-09 CIVIL STATE OF CALIFORNIA

The State of California or its officers or agents shall not be responsible for the accuracy or completeness of electronic copies of this plan sheet.

T.Y. LIN / MOFFATT & NICHOL
TWO HARRISON STREET
SAN FRANCISCO, CA 94105

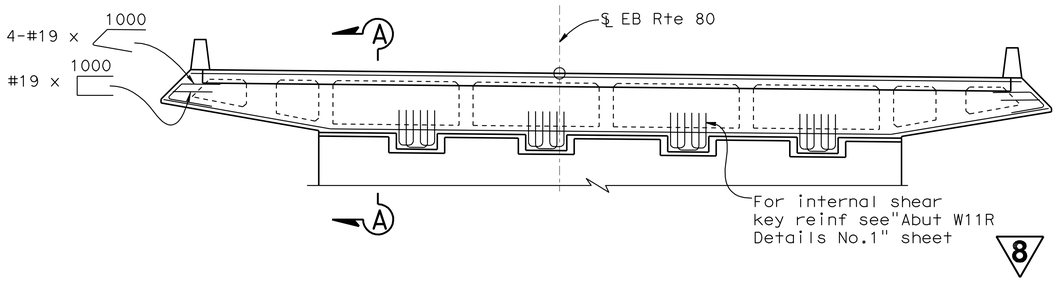

END DIAPHRAGM ELEVATION - ABUT W11R
1:80

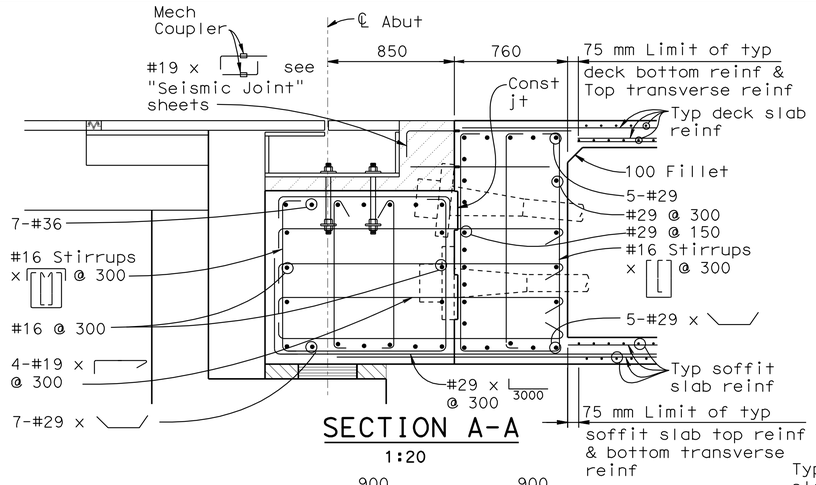

SECTION A-A
1:20

Note: For grillage at prestress anchorage see B8-5

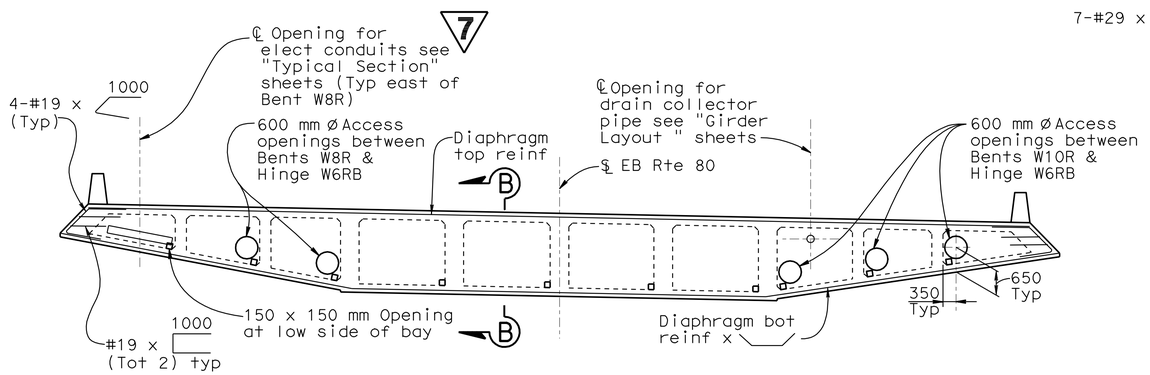

INTERMEDIATE DIAPHRAGM ELEVATION - FRAME EB1
1:80

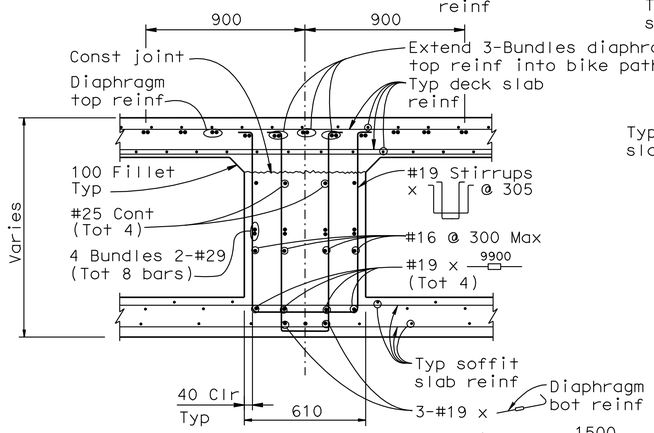

SECTION D-D
1:15

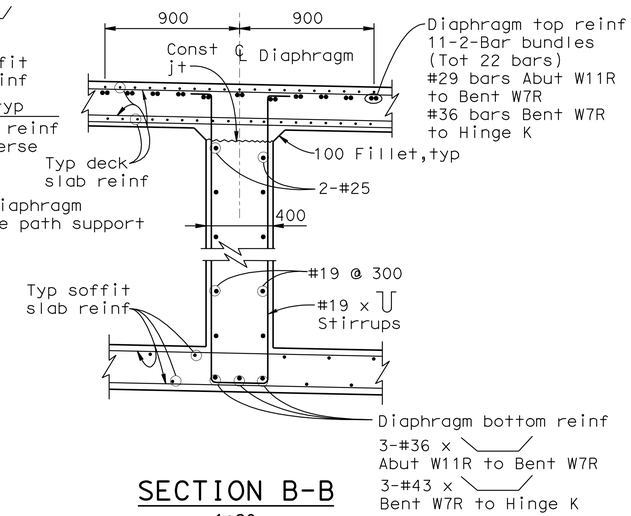

SECTION B-B
1:20

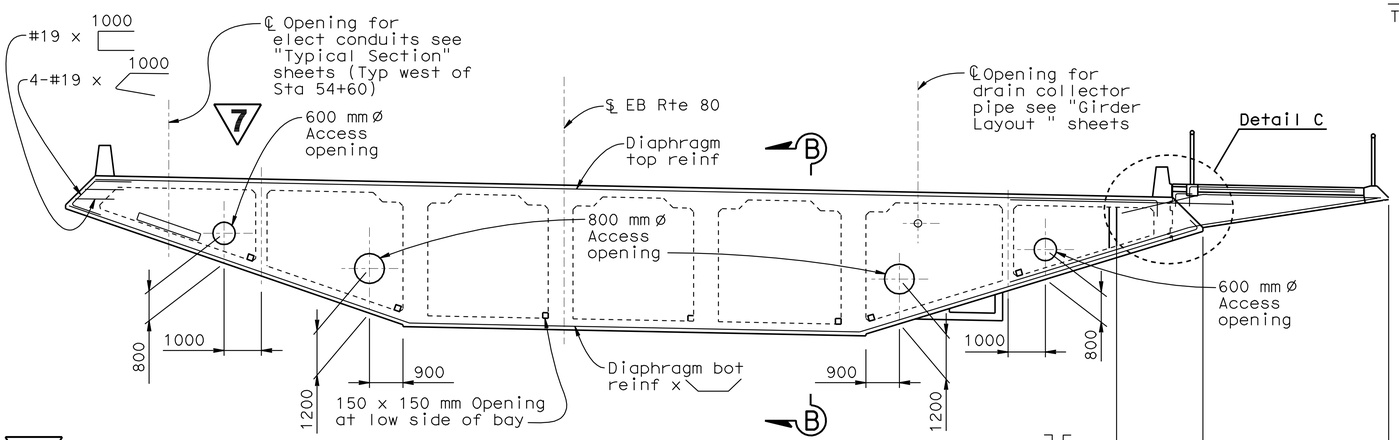

7 **REVISED PER ADDENDUM No. 7 DATED OCTOBER 19, 2009**

INTERMEDIATE DIAPHRAGM ELEVATION - FRAME EB2
1:80

8 **REVISED PER ADDENDUM No. 8 DATED NOVEMBER 12, 2009**

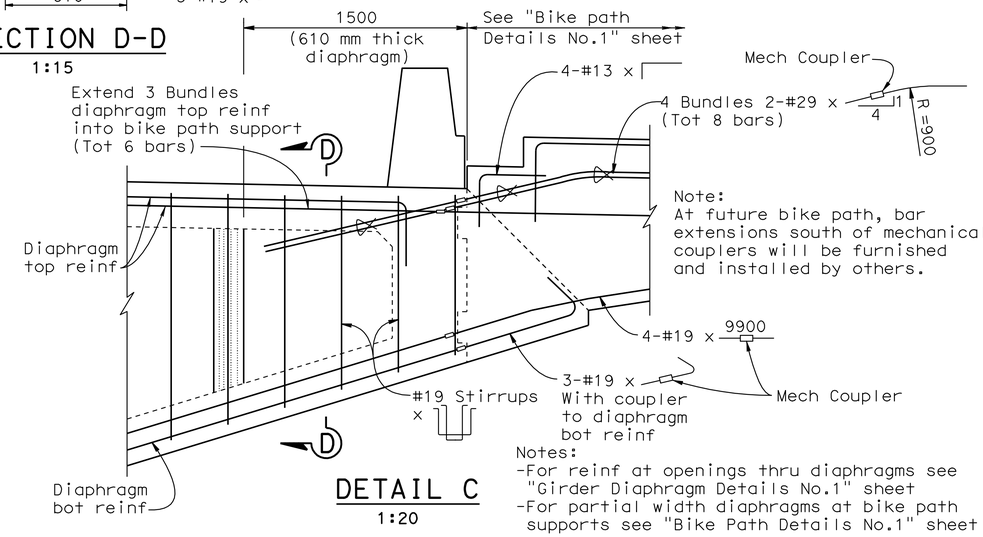

Note:
At future bike path, bar extensions south of mechanical couplers will be furnished and installed by others.

DETAIL C
1:20

Notes:
-For reinf at openings thru diaphragms see "Girder Diaphragm Details No.1" sheet
-For partial width diaphragms at bike path supports see "Bike Path Details No.1" sheet

ALL DIMENSIONS ARE IN MILLIMETERS UNLESS OTHERWISE SHOWN

DESIGN OVERSIGHT
JOHN MOOK, BERNARD CHAN, JUAN F. CARPIO
March 3, 2008
SIGN OFF DATE

Rev. Date: 5-18-98

	BY	CHECKED
DESIGN	Wang	Greer
DETAILS	van Ryn/Zucchi/Mai	Jain
QUANTITIES	Liao	E. Nichol

PREPARED FOR THE STATE OF CALIFORNIA DEPARTMENT OF TRANSPORTATION

Jal Birdy
PROJECT ENGINEER

BRIDGE NO. 34-0006 L/R
KILOMETER POST 12.8

SAN FRANCISCO OAKLAND BAY BRIDGE
EAST SPAN SEISMIC SAFETY PROJECT

YBI TRANSITION STRUCTURES
GIRDER DIAPHRAGM DETAILS NO.2

ORIGINAL SCALE IN MILLIMETERS FOR REDUCED PLANS 0 10 20 30 40 50 60 70 80 90 100

CU 04251
EA 0120S1

DISREGARD PRINTS BEARING EARLIER REVISION DATES

REVISION DATES (PRELIMINARY STAGE ONLY) 9/13/07 01/31/08 3/3/08 8/28/09 9/28/09 10/28/09 1/3/06 10/4/06 1/24/07 6/25/07

SHEET 97 OF 209

FILE => 04-0120s1-34-006r1-1-gdt03.add

USERNAME => trmikes1 DATE PLOTTED => 09-NOV-2009 TIME PLOTTED => 13:16

DIST.	COUNTY	ROUTE	KILOMETER POST TOTAL PROJECT	SHEET NO.	TOTAL SHEETS
04	SF	80	12.7/13.2	646A	806

Caltrans Metric

REGISTERED ENGINEER - CIVIL

6-23-08
PLANS APPROVAL DATE

REGISTERED PROFESSIONAL ENGINEER A.L. ELY No. 18880 Exp. 6-30-09 CIVIL STATE OF CALIFORNIA

The State of California or its officers or agents shall not be responsible for the accuracy or completeness of electronic copies of this plan sheet.

T.Y. LIN / MOFFATT & NICHOL
TWO HARRISON STREET
SAN FRANCISCO, CA 94105

8

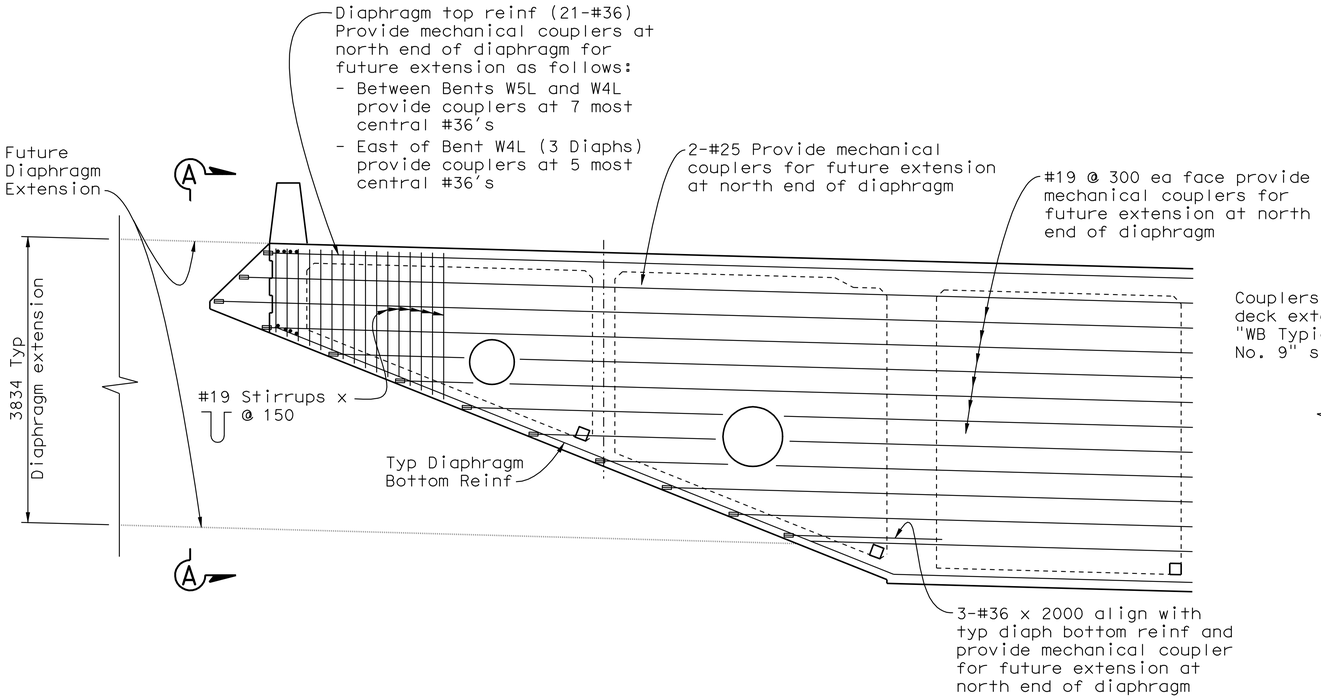

DIAPHRAGM ELEVATION - PROVISIONS FOR FUTURE DIAPHRAGM EXTENSIONS AT NORTH SIDE FRAME WB2 BETWEEN BENTS W5L AND W3L

1:40

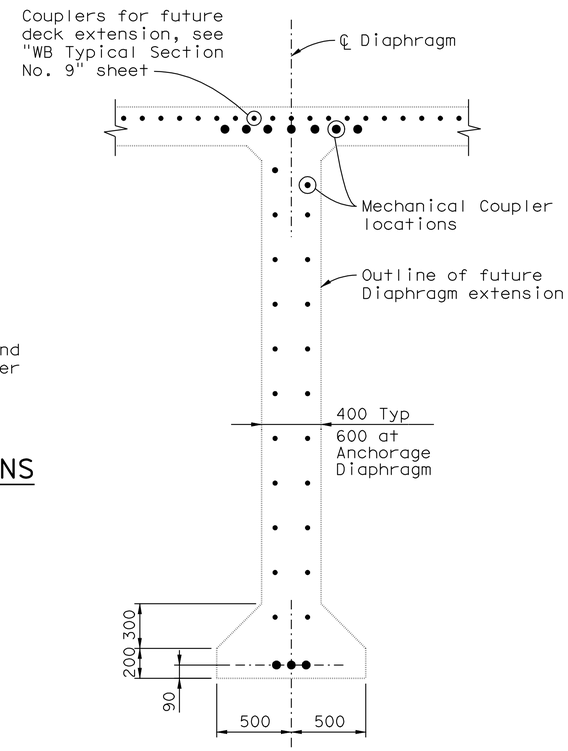

SECTION A-A - WEST OF BENT W4L

(Typ at 5 Diaphragm locations)

1:20

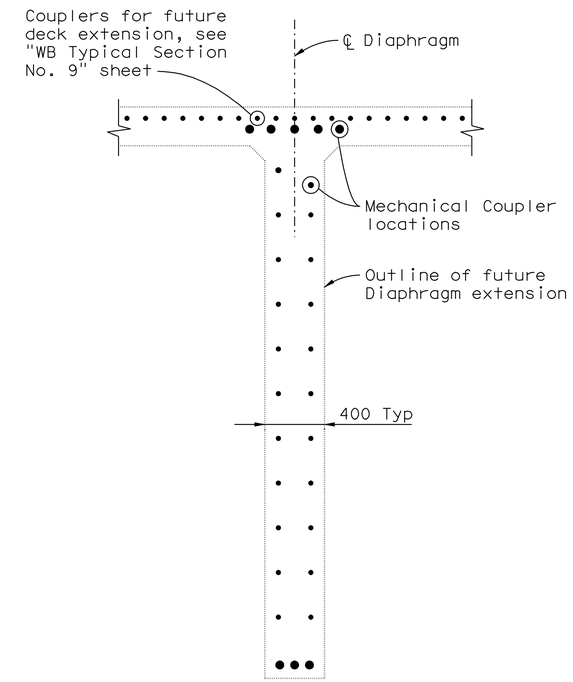

SECTION A-A - EAST OF BENT W4L

(Typ at 2 Diaphragm locations)

1:20

8 **ADDED PER ADDENDUM No. 8 DATED NOVEMBER 12, 2009**

ALL DIMENSIONS ARE IN MILLIMETERS UNLESS OTHERWISE SHOWN

DESIGN OVERSIGHT
JUAN F. CARPIO
SIGN OFF DATE

	BY	CHECKED
DESIGN	Wang	Lee
DETAILS	Samson	Jain
QUANTITIES	Jain	Birdy

PREPARED FOR THE STATE OF CALIFORNIA DEPARTMENT OF TRANSPORTATION

Jal Birdy
PROJECT ENGINEER

BRIDGE NO. 34-006 L/R
KILOMETER POST 12.8

SAN FRANCISCO OAKLAND BAY BRIDGE
EAST SPAN SEISMIC SAFETY PROJECT

YBI TRANSITION STRUCTURES

GIRDER DIAPHRAGM DETAILS NO.3

Rev. Date: 5-18-98

ORIGINAL SCALE IN MILLIMETERS FOR REDUCED PLANS 0 10 20 30 40 50 60 70 80 90 100

CU 04251
EA 0120S1

DISREGARD PRINTS BEARING EARLIER REVISION DATES 8/19/09

REVISION DATES (PRELIMINARY STAGE ONLY) 1/9/09 8/19/09

SHEET 97A OF 209

FILE => 04-0120s1-34-006r1-1-gdt04.add

USERNAME => trmikest DATE PLOTTED => 09-NOV-2009 TIME PLOTTED => 13:16

DIST.	COUNTY	ROUTE	KILOMETER POST TOTAL PROJECT	SHEET NO.	TOTAL SHEETS
04	SF	80	12.7/13.2	647	806

Caltrans Metric

8

REGISTERED ENGINEER - CIVIL

6-23-08

PLANS APPROVAL DATE

REGISTERED PROFESSIONAL ENGINEER A.L. ELY No. 18880 Exp. 6-30-09 CIVIL STATE OF CALIFORNIA

The State of California or its officers or agents shall not be responsible for the accuracy or completeness of electronic copies of this plan sheet.

T.Y. LIN / MOFFATT & NICHOL
TWO HARRISON STREET
SAN FRANCISCO, CA 94105

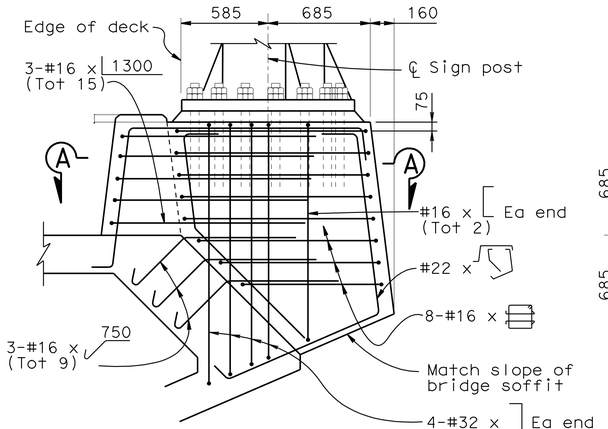

ELEVATION

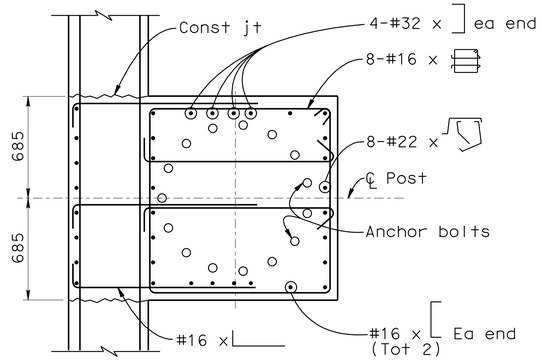

SECTION A-A

CMS SIGN & OVERHEAD SIGN FOUNDATIONS

1:20

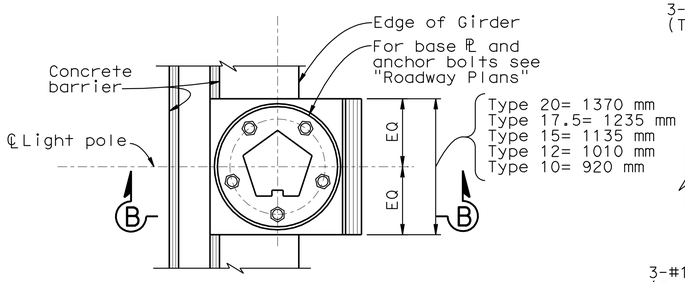

PLAN

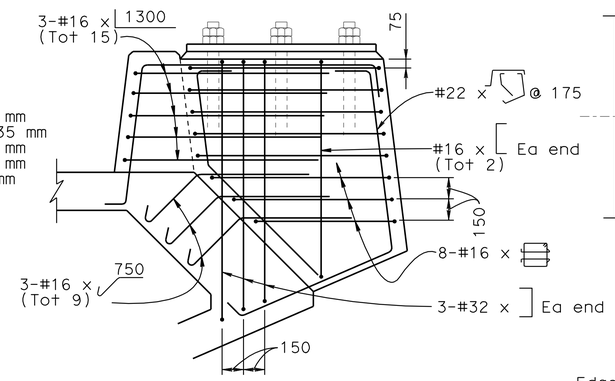

SECTION B-B

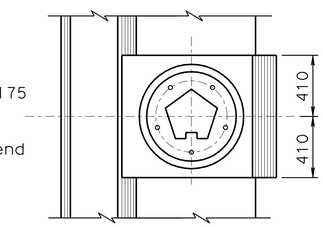

PLAN

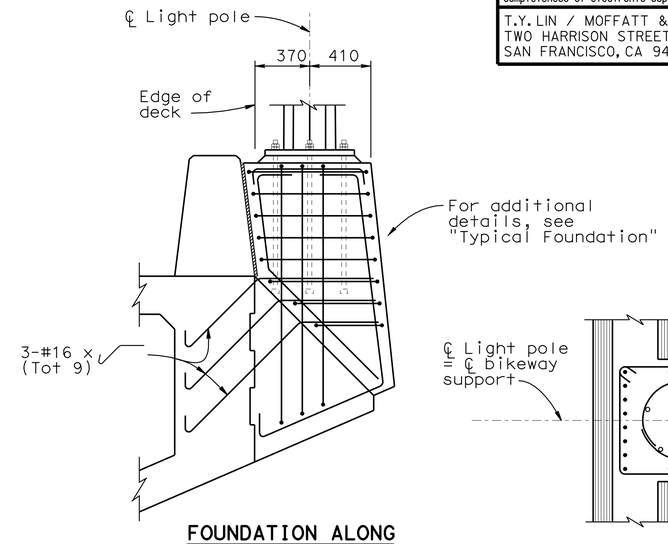

FOUNDATION ALONG NORTH SIDE WB FRAME 2

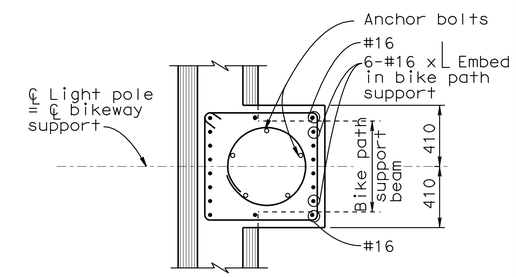

SECTION D-D

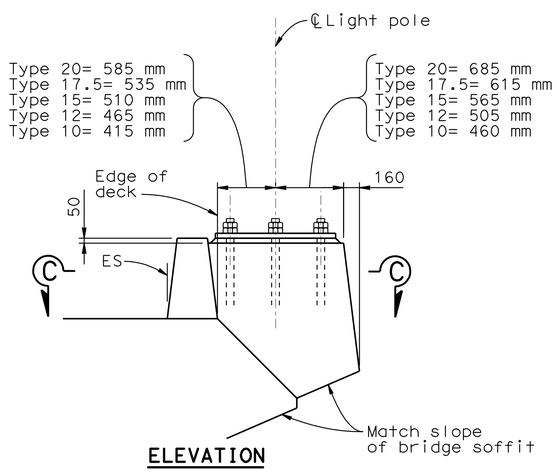

ELEVATION

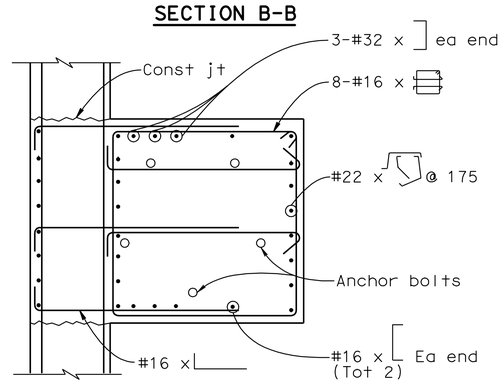

SECTION C-C

ROADWAY LIGHT POLE FOUNDATIONS

No Scale

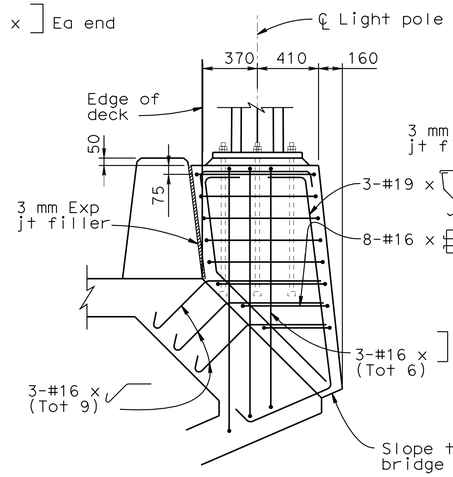

TYPICAL FOUNDATION

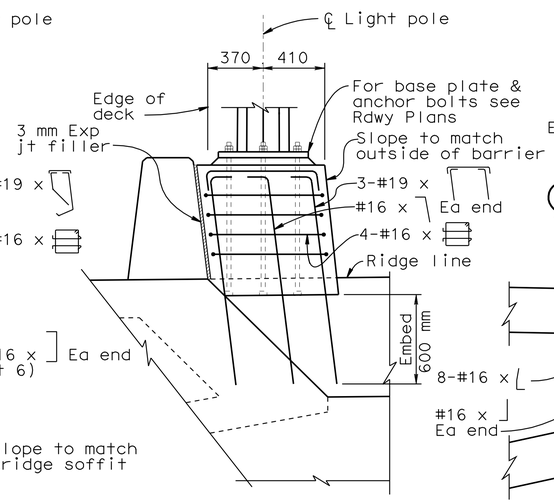

FOUNDATION AT OUTRIGGER BENT CAPS

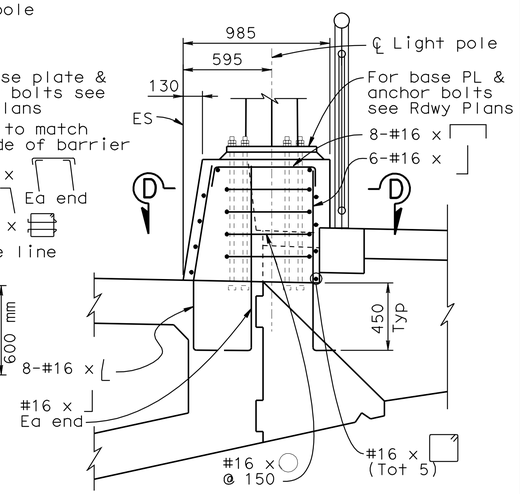

FOUNDATION AT BIKE PATH

LIGHT POLE FOUNDATION TYPE 7 DETAILS

1:20

ALL DIMENSIONS ARE IN MILLIMETERS UNLESS OTHERWISE SHOWN

8 **REVISED PER ADDENDUM No. 8 DATED NOVEMBER 12, 2009**

DESIGN OVERSIGHT
JOHN MOOK, BERNARD CHAN, JUAN F. CARPIO
SIGN OFF DATE

Rev. Date: 5-18-98

	BY	CHECKED
DESIGN	Shangkuan	Ann
DETAILS	van Ryn/Zucchi/Mai	Jain
QUANTITIES	Liao	E. Nichol

PREPARED FOR THE STATE OF CALIFORNIA DEPARTMENT OF TRANSPORTATION

Jal Birdy
PROJECT ENGINEER

BRIDGE NO. 34-0006 L/R
KILOMETER POST 12.8

SAN FRANCISCO OAKLAND BAY BRIDGE
EAST SPAN SEISMIC SAFETY PROJECT

YBI TRANSITION STRUCTURES

MISC SUPERSTRUCTURE DETAILS NO.1

ORIGINAL SCALE IN MILLIMETERS FOR REDUCED PLANS 0 10 20 30 40 50 60 70 80 90 100

CU 04251
EA 0120S1

DISREGARD PRINTS BEARING EARLIER REVISION DATES

REVISION DATES (PRELIMINARY STAGE ONLY) 9/13/07 01/31/08 3/31/08 8/31/09 5/30/02 2/14/03 1/3/06 10/12/06 1/24/07 6/25/07

SHEET 98 OF 209

FILE => 04-0120s1-34-006r1-1-supdet01.add

USERNAME => ttmikes1 DATE PLOTTED => 09-NOV-2009 TIME PLOTTED => 13:17

DIST	COUNTY	ROUTE	KILOMETER POST TOTAL PROJECT	SHEET No	TOTAL SHEETS
04	SF	80	12.7/13.2	792	806

Caltrans Metric

REGISTERED CIVIL ENGINEER 03/11/08

6-23-08
PLANS APPROVAL DATE

The State of California or its officers or agents shall not be responsible for the accuracy or completeness of electronic copies of this plan sheet.

REGISTERED PROFESSIONAL ENGINEER Gregory Benkovich No. C40518 Exp. 3/31/09 CIVIL STATE OF CALIFORNIA

Parsons Brinckerhoff Quade & Douglas, Inc.
303 Second Street, Suite 700N
San Francisco, CA 94107

NOTES:

1. The contractor shall verify all controlling field dimensions before ordering or fabricating any material.
2. For concrete pad location(s), see electrical plans. Concrete pad(s) size should be the cabinet size plus 102 mm around.
3. For structural notes see "General structural notes" sheet AS-1.
4. For dimensions "Y1", "Y2" and angle "∠" see "Service Platform Sections" sheet AS-3.
5. Top of platform shall be level, with minimum distance of 1500mm from top of concrete slab of the platform to the top of bridge roadway. This shall be achieved by varying height (see dimension "Y1") of W410 vertical hanger only. Varying thickness of the concrete slab to achieve level platform is not permissible.

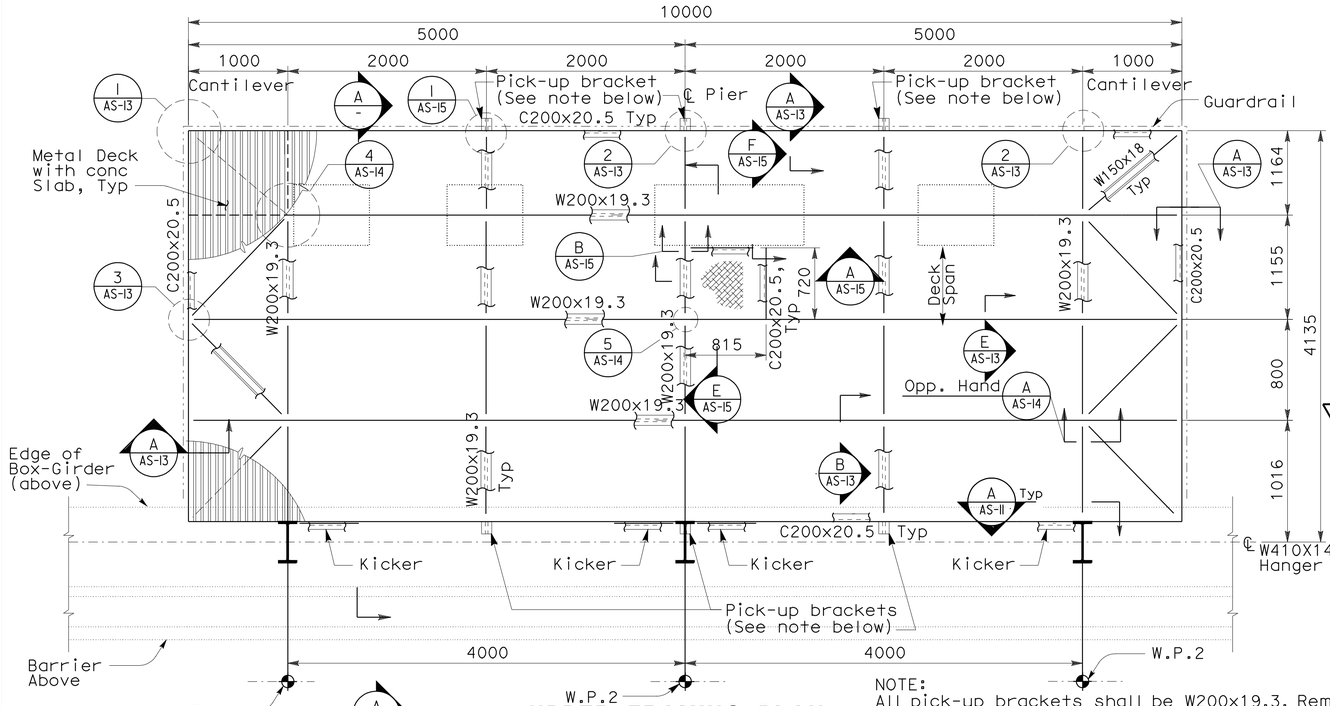

UPPER FRAMING PLAN

SCALE: 1:30

NOTE:
All pick-up brackets shall be W200x19.3. Remove W200x19.3 pick-up brackets after galvanizing. Plug and seal holes in C200. Complete galvanization at pick-up point locations.

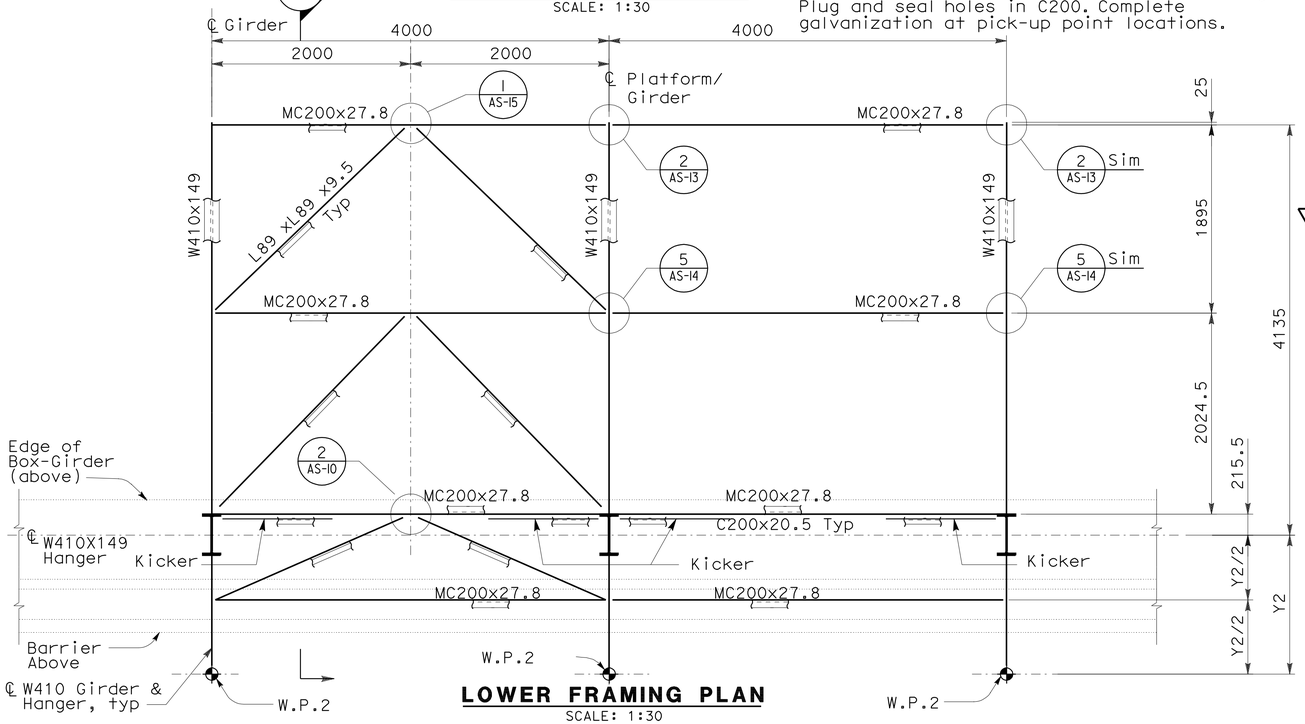

LOWER FRAMING PLAN

SCALE: 1:30

8

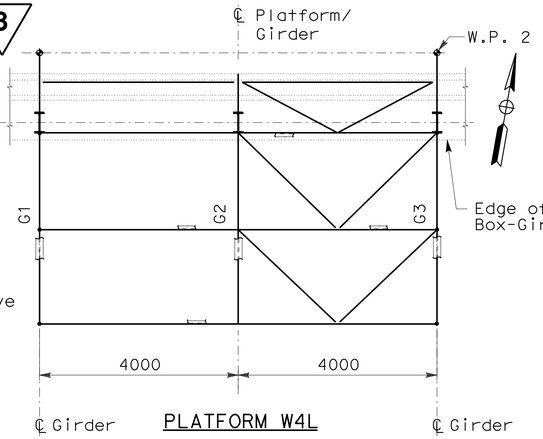

PLATFORM W4L

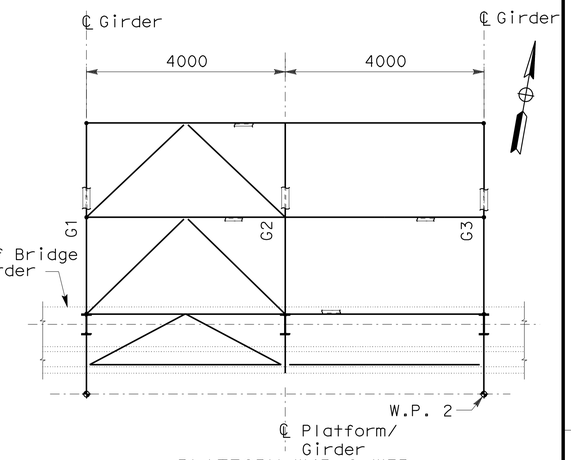

PLATFORM W4R & W5R

LOWER FRAMING KEY PLAN

8

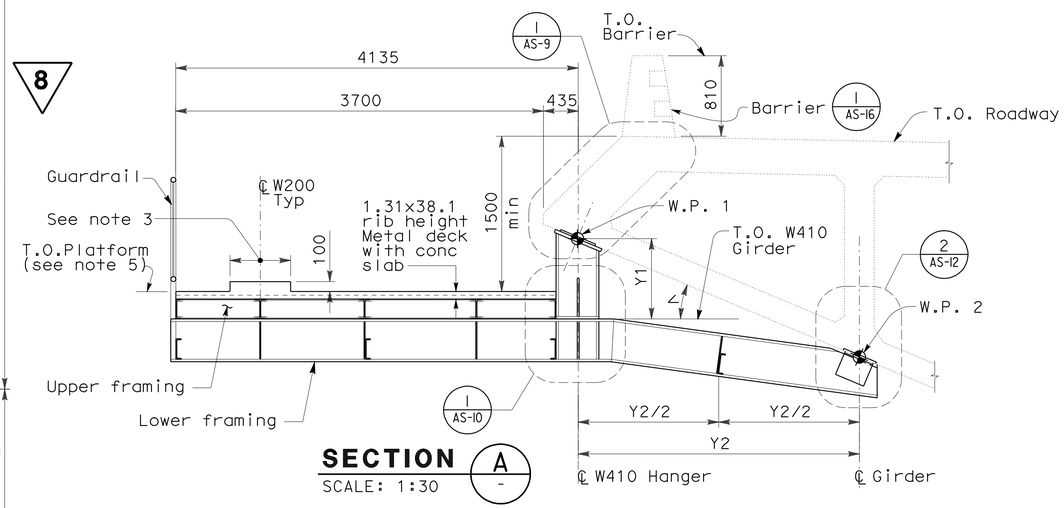

SECTION A

SCALE: 1:30

8 REVISED PER ADDENDUM No. 8 DATED NOVEMBER 12, 2009

ALL DIMENSIONS ARE IN MILLIMETERS UNLESS OTHERWISE SHOWN

DESIGN	BY G. Benkovich	CHECKED M.S. Owyang	
DETAILS	BY O. Kurnovskaya	CHECKED G. Benkovich	
QUANTITIES	BY G. Benkovich	CHECKED M.S. Owyang	

DESIGN OVERSIGHT

SIGN OFF DATE

DESIGN DETAIL SHEET (METRIC) (REV. 3/1/98)

ORIGINAL SCALE IN MILLIMETERS FOR REDUCED PLANS 0 10 20 30 40 50 60 70 80 90 100

PREPARED FOR THE STATE OF CALIFORNIA DEPARTMENT OF TRANSPORTATION

Trinh Lai
PROJECT ENGINEER

CU 04251
EA 0120S1

BRIDGE NO. 34-0006
KILOMETER POST 12.7/13.2

YBI TRANSITION STRUCTURE

SERVICE PLATFORMS AT PIER W4R, W5R AND W4L - FRAMING PLAN

AS-2

DISREGARD PRINTS BEARING EARLIER REVISION DATES

REVISION DATES (PRELIMINARY STAGE ONLY)

SHEET 2 OF 16

FILE => 40120swc002.add

G:\jojo\pse\0120s1\addendum8\40120swc002.add

USERNAME => ttmikes DATE PLOTTED => 09-NOV-2009 TIME PLOTTED => 13:17

DIST	COUNTY	ROUTE	KILOMETER POST TOTAL PROJECT	SHEET No	TOTAL SHEETS
04	SF	80	12.7/13.2	794	806

Caltrans Metric

Gregory Benkovich 03/11/08
REGISTERED CIVIL ENGINEER

6-23-08
PLANS APPROVAL DATE

REGISTERED PROFESSIONAL ENGINEER Gregory Benkovich No. C40518 Exp. 3/31/09 CIVIL STATE OF CALIFORNIA

The State of California or its officers or agents shall not be responsible for the accuracy or completeness of electronic copies of this plan sheet.

Parsons Brinckerhoff Quade & Douglas, Inc.
303 Second Street, Suite 700N
San Francisco, CA 94107

NOTES:

1. The contractor shall verify all controlling field dimensions before ordering or fabricating any material.
2. For concrete pad location(s), see electrical plans. Concrete pad(s) size should be the cabinet size plus 102 mm around.
3. For structural notes see "General structural notes" sheet AS-1.
4. For dimensions "Y1", "Y2" and angle "∠"see "Service Platform Sections" sheet AS-3.
5. Top of platform shall be level, with minimum distance of 1500mm from top of concrete slab of the platform to the top of bridge roadway. This shall be achieved by varying height (see dimension"Y1") of W410 vertical hanger only. Varying thickness of platform to achieve level platform is not permissible.

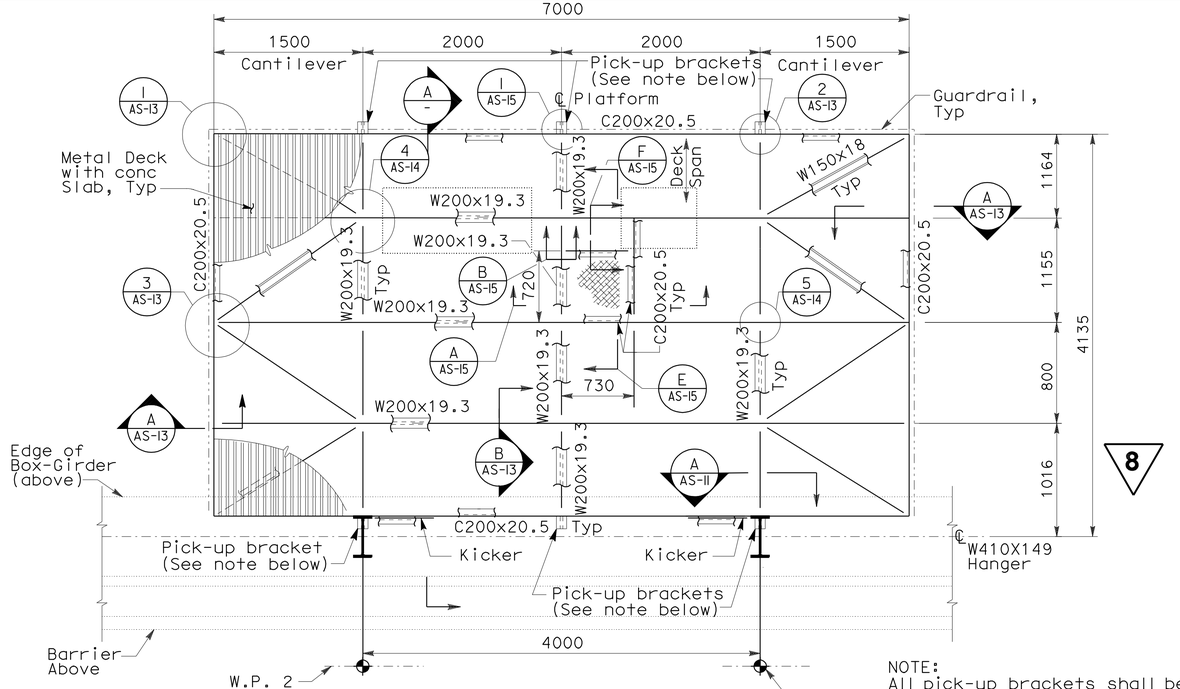

UPPER FRAMING PLAN

SCALE: 1:30

NOTE:
All pick-up brackets shall be W200x19.3. Remove W200x19.3 pick-up brackets after galvanizing. Plug and seal holes in C200. Complete galvanization at pick-up point locations.

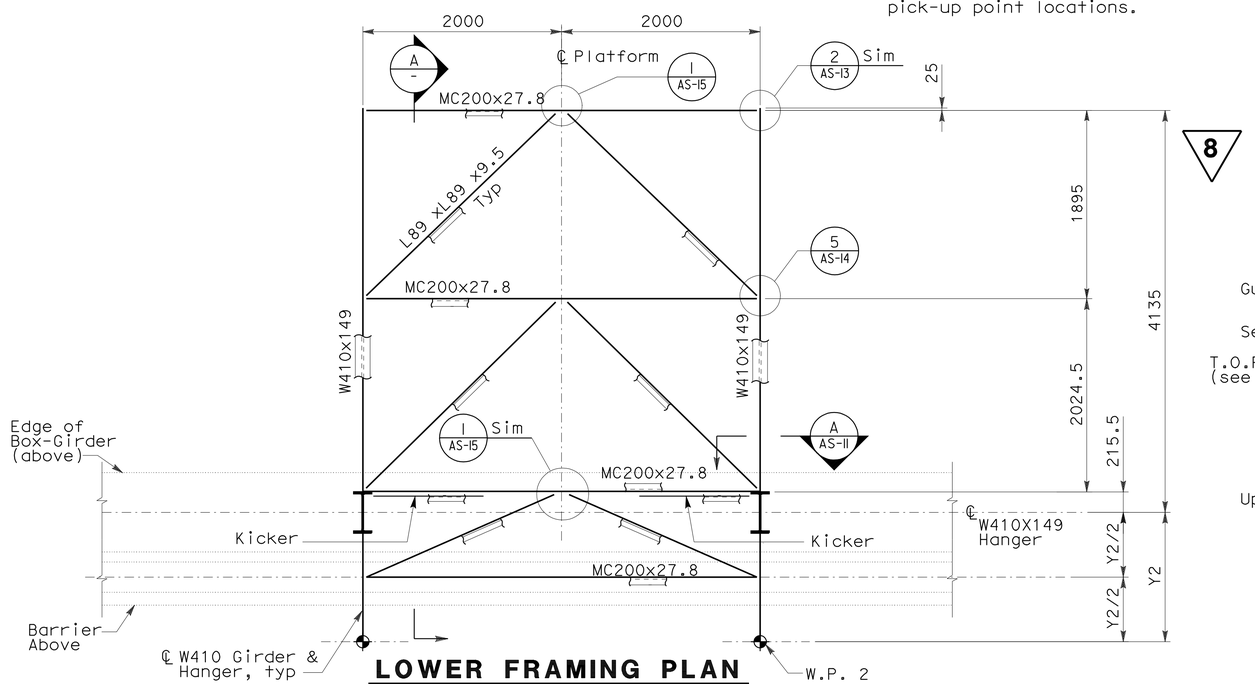

LOWER FRAMING PLAN

SCALE: 1:30

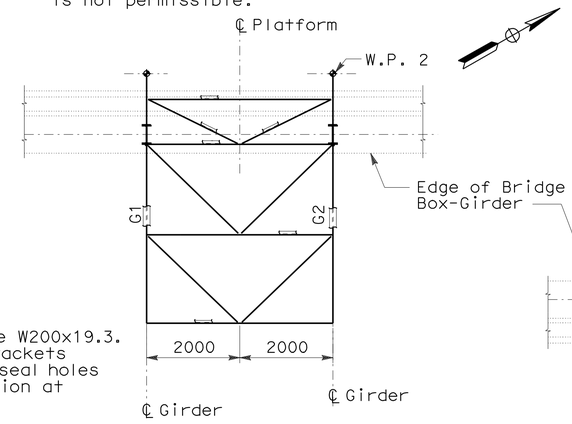

PLATFORM W8L

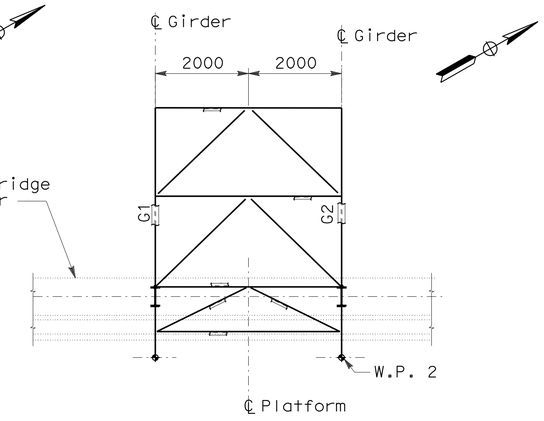

PLATFORM W8R

LOWER FRAMING KEY PLAN

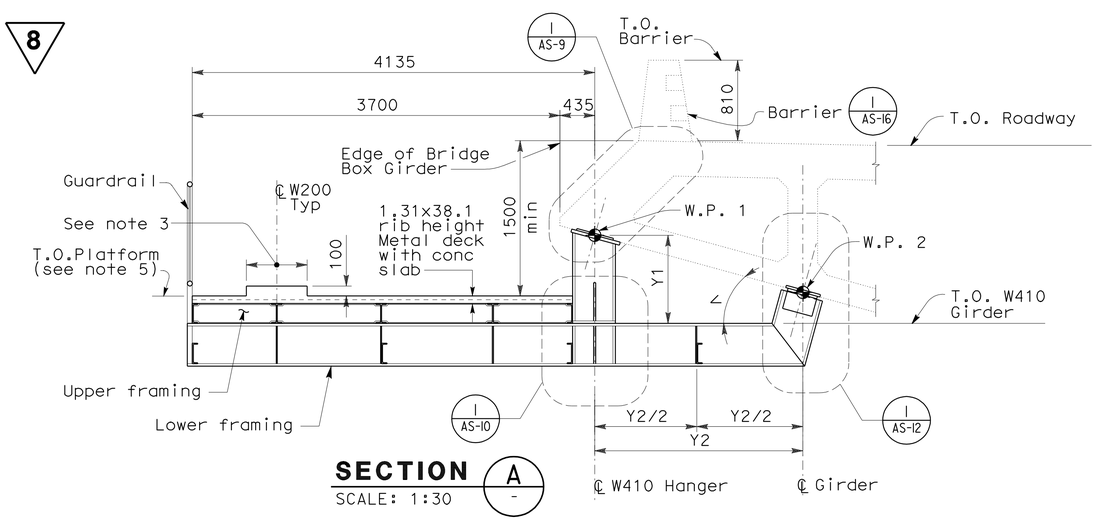

SECTION A

SCALE: 1:30

8 REVISED PER ADDENDUM No. 8 DATED NOVEMBER 12, 2009

ALL DIMENSIONS ARE IN MILLIMETERS UNLESS OTHERWISE SHOWN

DESIGN	BY G. Benkovich	CHECKED M.S. Owyang	
DETAILS	BY O. Kurnovskaya	CHECKED G. Benkovich	
QUANTITIES	BY G. Benkovich	CHECKED M.S. Owyang	

DESIGN OVERSIGHT

SIGN OFF DATE

DESIGN DETAIL SHEET (METRIC) (REV. 3/1/98)

PREPARED FOR THE STATE OF CALIFORNIA DEPARTMENT OF TRANSPORTATION

Trinh Lai
PROJECT ENGINEER

CU 04251
EA 0120S1

BRIDGE NO. 34-0006
KILOMETER POST 12.7/13.2

YBI TRANSITION STRUCTURE

SERVICE PLATFORMS AT PIER W8R AND W8L - FRAMING PLAN

AS-4

SHEET 4 OF 16

DISREGARD PRINTS BEARING EARLIER REVISION DATES

REVISION DATES (PRELIMINARY STAGE ONLY)

ORIGINAL SCALE IN MILLIMETERS FOR REDUCED PLANS 0 10 20 30 40 50 60 70 80 90 100

FILE => 40120swc004.add

G:\jojo\pse\0120s1\addendum8\40120swc004.add

USERNAME => trmikesl DATE PLOTTED => 09-NOV-2009 TIME PLOTTED => 13:17

DIST	COUNTY	ROUTE	KILOMETER POST TOTAL PROJECT	SHEET No	TOTAL SHEETS
04	SF	80	12.7/13.2	796	806

Caltrans Metric

Gregory Benkovich 03/11/08
REGISTERED CIVIL ENGINEER

6-23-08
PLANS APPROVAL DATE

REGISTERED PROFESSIONAL ENGINEER Gregory Benkovich No. C40518 Exp. 3/31/09 CIVIL STATE OF CALIFORNIA

The State of California or its officers or agents shall not be responsible for the accuracy or completeness of electronic copies of this plan sheet.

Parsons Brinckerhoff Quade & Douglas, Inc.
303 Second Street, Suite 700N
San Francisco, CA 94107

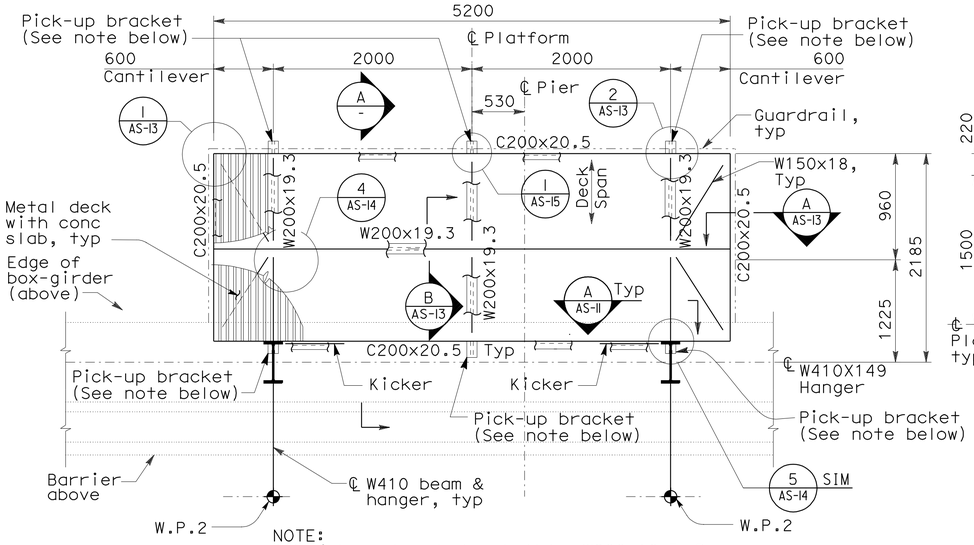

NOTE:
All pick-up brackets shall be W200x19.3. Remove W200x19.3 pick-up brackets after galvanizing. Plug and seal holes in C200. Complete galvanization at pick-up point locations.

FRAMING PLAN
SCALE: 1:30

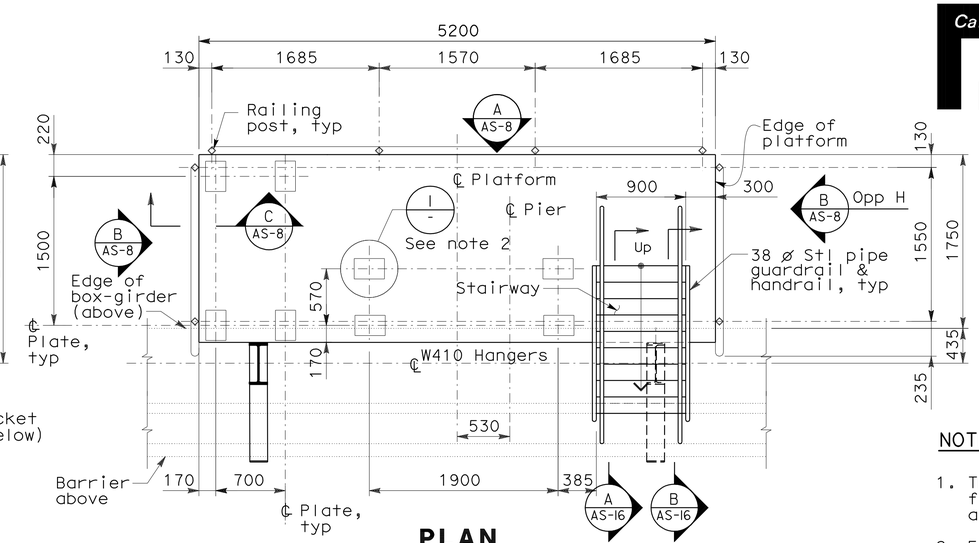

PLAN
SCALE: 1:30

8

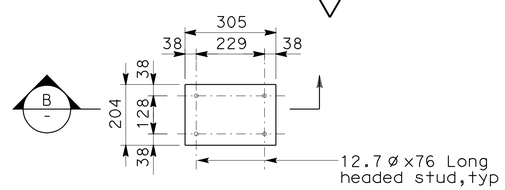

DETAIL I
SCALE: 1:10

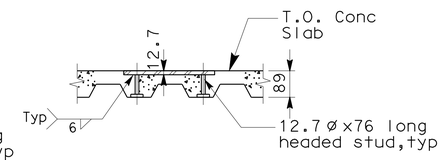

SECTION B
SCALE: 1:10

NOTES:

1. The contractor shall verify all controlling field dimensions before ordering or fabricating any material.
2. For concrete pad location(s) and electrical panel support, see electrical plans. Concrete pad(s) size should be the cabinet size plus 102 mm around.
3. For structural notes see "General structural notes" sheet AS-1.
4. For dimensions "Y1", "Y2" and angle "∠"see "Service Platform Sections" sheet AS-3.
5. Top of platform shall be level, with minimum distance of 1500mm from top of concrete slab of the platform to the top of bridge roadway. This shall be achieved by varying height (see dimension "Y1") of W410 vertical hanger only. Varying thickness of the conrete slab to achieve level olatform is not permissible.

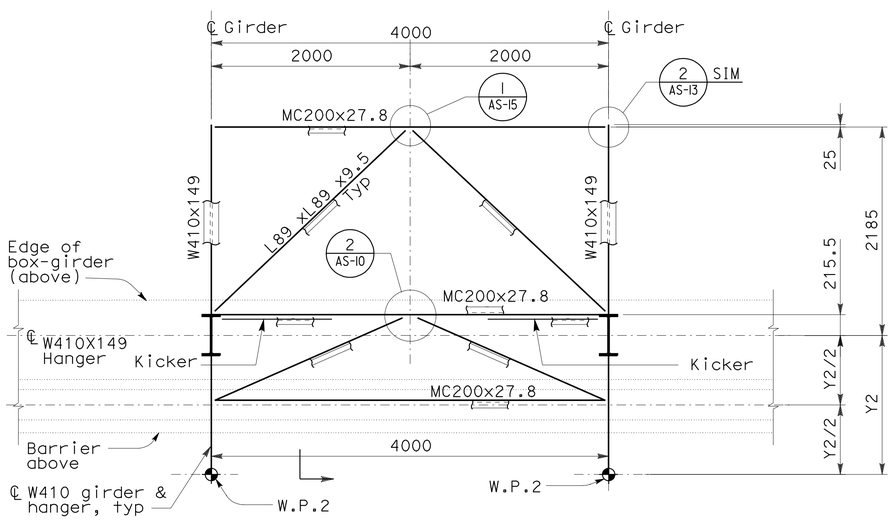

LOWER FRAMING PLAN
SCALE: 1:30

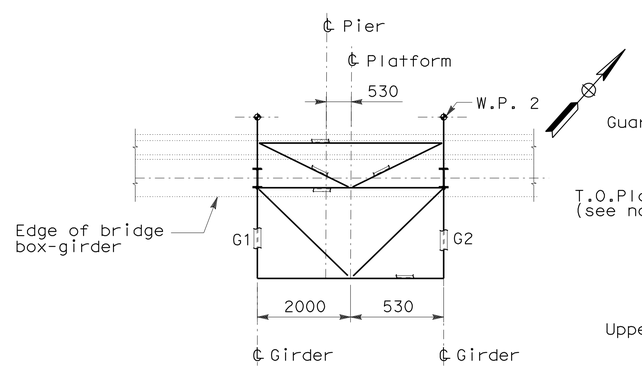

PLATFORM W5L

LOWER FRAMING KEY PLAN

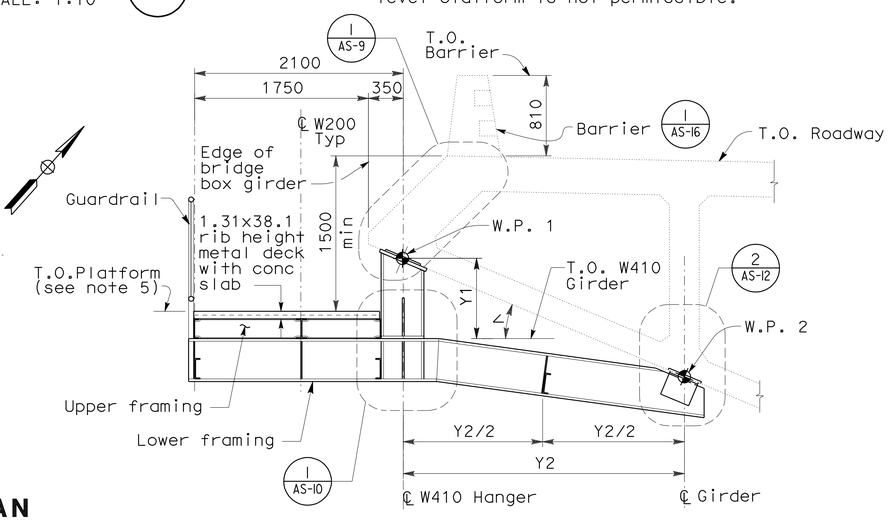

SECTION A
SCALE: 1:30

8 REVISED PER ADDENDUM No. 8 DATED NOVEMBER 12, 2009

ALL DIMENSIONS ARE IN MILLIMETERS UNLESS OTHERWISE SHOWN

DESIGN	BY G. Benkovich	CHECKED M.S. Owyang	
DETAILS	BY O. Kurnovskaya	CHECKED G. Benkovich	
QUANTITIES	BY G. Benkovich	CHECKED M.S. Owyang	

DESIGN OVERSIGHT
SIGN OFF DATE
DESIGN DETAIL SHEET (METRIC) (REV. 3/1/98)

ORIGINAL SCALE IN MILLIMETERS FOR REDUCED PLANS 0 10 20 30 40 50 60 70 80 90 100

PREPARED FOR THE STATE OF CALIFORNIA DEPARTMENT OF TRANSPORTATION

Trinh Lai
PROJECT ENGINEER

CU 04251
EA 0120S1

BRIDGE NO. 34-0006
KILOMETER POST 12.7/13.2

DISREGARD PRINTS BEARING EARLIER REVISION DATES

REVISION DATES (PRELIMINARY STAGE ONLY)

YBI TRANSITION STRUCTURE
SERVICE PLATFORMS AT PIER W5L - PLAN AND SECTION

AS-6

SHEET 6 OF 16

FILE => 40120swc006.add

G:\jojo\pse\0120s1\addendum8\40120swc006.add

USERNAME => trmikesl DATE PLOTTED => 09-NOV-2009 TIME PLOTTED => 13:18

DIST	COUNTY	ROUTE	KILOMETER POST TOTAL PROJECT	SHEET No	TOTAL SHEETS
04	SF	80	12.7/13.2	803	806

Caltrans Metric

Gregory Benkovich 03/11/08
REGISTERED CIVIL ENGINEER

6-23-08
PLANS APPROVAL DATE

REGISTERED PROFESSIONAL ENGINEER Gregory Benkovich No. C40518 Exp. 3/31/09 CIVIL STATE OF CALIFORNIA

The State of California or its officers or agents shall not be responsible for the accuracy or completeness of electronic copies of this plan sheet.

Parsons Brinckerhoff Quade & Douglas, Inc.
303 Second Street, Suite 700N
San Francisco, CA 94107

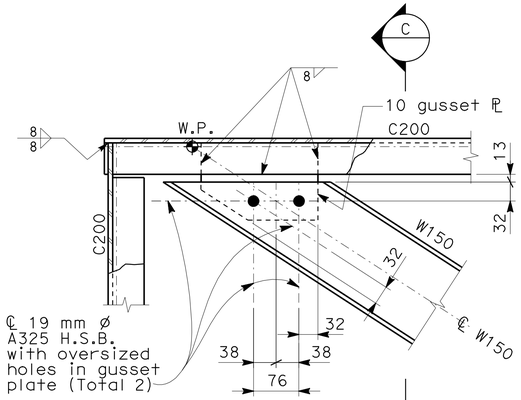

1 DETAIL
AS-4 AS-6 AS-2 SCALE: 1:5

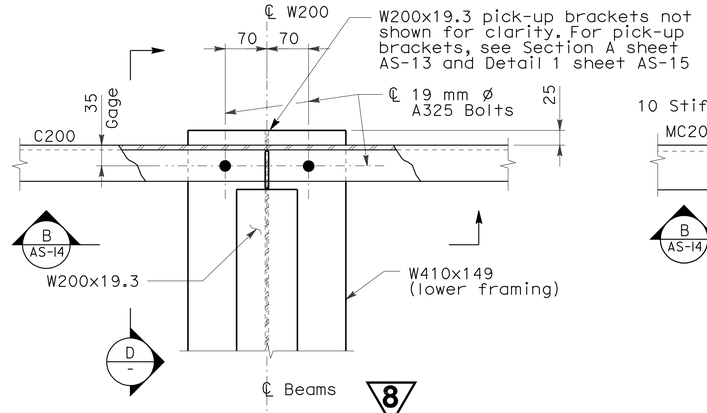

UPPER FRAMING

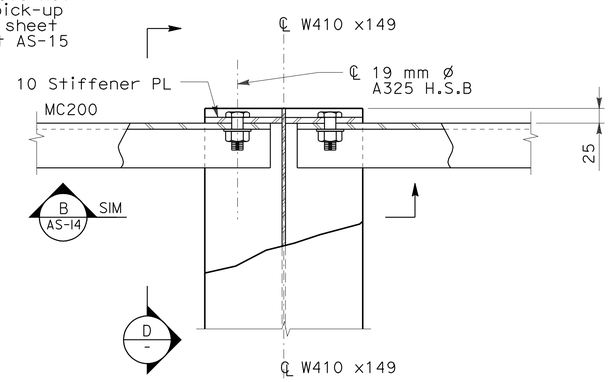

LOWER FRAMING

2 DETAIL
AS-4 AS-6 AS-2 SCALE: 1:5

NOTES:

1. The contractor shall verify all controlling field dimensions before ordering or fabricating any material.
2. For locations of platform, see electrical sheets.
3. For structural notes, see "General Structural Notes" sheet AS-1.

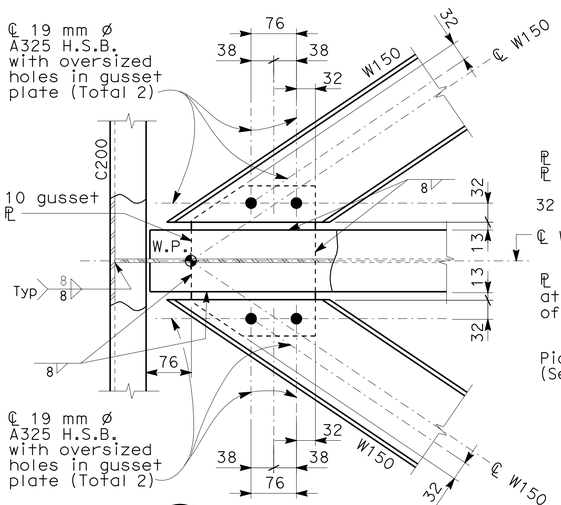

3 DETAIL
AS-4 AS-2 SCALE: 1:5

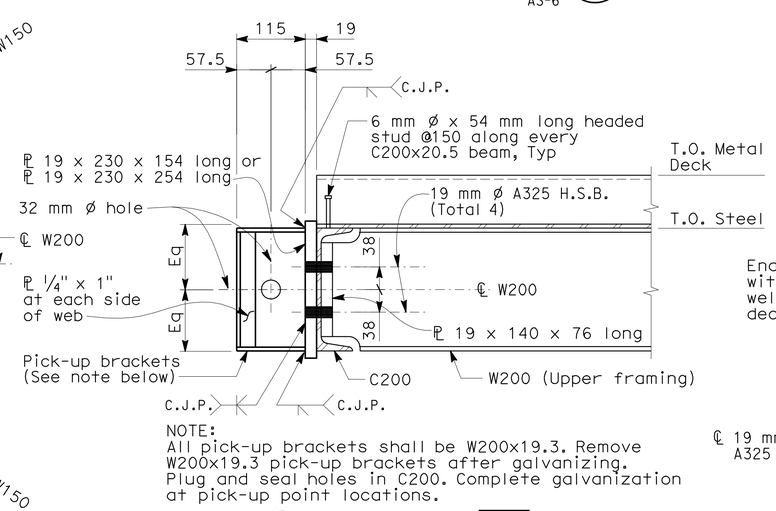

NOTE:
All pick-up brackets shall be W200x19.3. Remove W200x19.3 pick-up brackets after galvanizing. Plug and seal holes in C200. Complete galvanization at pick-up point locations.

A SECTION
AS-4 AS-6 AS-2 SCALE: 1:5

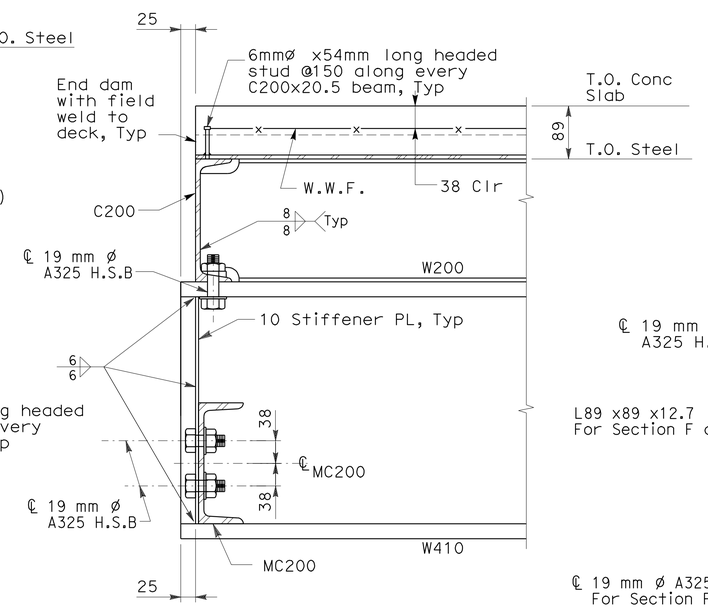

D SECTION
SCALE: 1:5

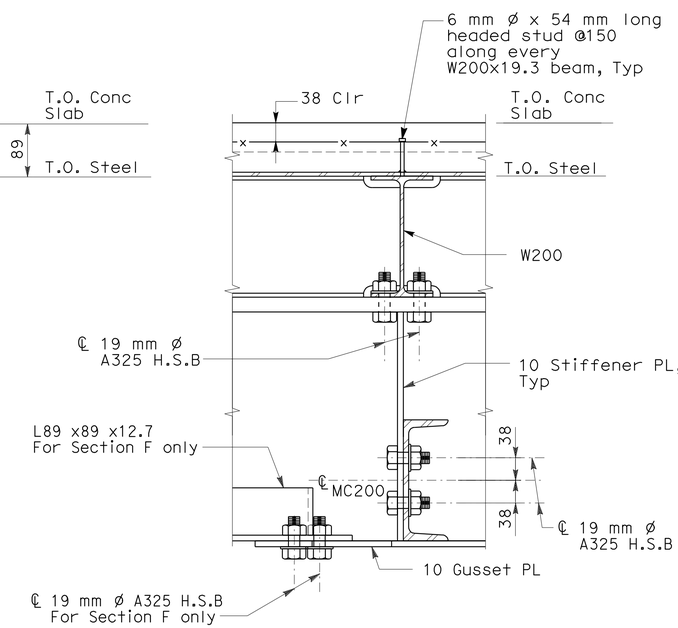

E F SECTION
AS-14 AS-14 SCALE: 1:5

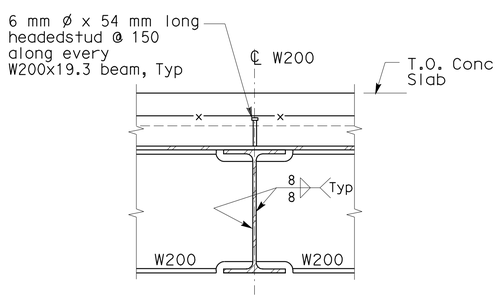

B SECTION
AS-4 AS-6 AS-2 SCALE: 1:5

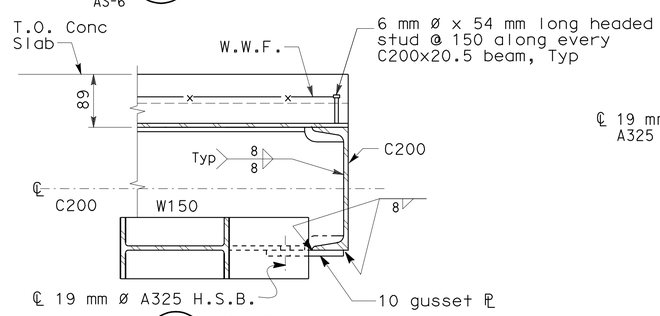

C DETAIL
SCALE: 1:5

8 REVISED PER ADDENDUM No. 8 DATED NOVEMBER 12, 2009

ALL DIMENSIONS ARE IN MILLIMETERS UNLESS OTHERWISE SHOWN

DESIGN OVERSIGHT	DESIGN	BY G. Benkovich	CHECKED M.S. Owyang	PREPARED FOR THE STATE OF CALIFORNIA DEPARTMENT OF TRANSPORTATION	Trinh Lai PROJECT ENGINEER
SIGN OFF DATE	DETAILS	BY O. Kurnovskaya	CHECKED G. Benkovich		
	QUANTITIES	BY G. Benkovich	CHECKED M.S. Owyang		

BRIDGE NO. 34-0006
KILOMETER POST 12.7/13.2

YBI TRANSITION STRUCTURE

SERVICE PLATFORMS FRAMING DETAILS AND SECTIONS (SHEET 1 OF 3)

AS-13

SHEET 13 OF 16

DESIGN DETAIL SHEET (METRIC) (REV. 3/1/98)

ORIGINAL SCALE IN MILLIMETERS FOR REDUCED PLANS 0 10 20 30 40 50 60 70 80 90 100

CU 04251
EA 0120S1

DISREGARD PRINTS BEARING EARLIER REVISION DATES

REVISION DATES (PRELIMINARY STAGE ONLY)

FILE => 40120swc013.add

G:\jojo\pse\0120s1\addendum8\40120swc013.add

USERNAME => trmikes| DATE PLOTTED => 09-NOV-2009 TIME PLOTTED => 13:18

DIST	COUNTY	ROUTE	KILOMETER POST TOTAL PROJECT	SHEET No	TOTAL SHEETS
04	SF	80	12.7/13.2	804	806

Caltrans Metric

Gregory Benkovich 03/11/08
REGISTERED CIVIL ENGINEER

6-23-08
PLANS APPROVAL DATE

REGISTERED PROFESSIONAL ENGINEER Gregory Benkovich No. C40518 Exp. 3/31/09 CIVIL STATE OF CALIFORNIA

The State of California or its officers or agents shall not be responsible for the accuracy or completeness of electronic copies of this plan sheet.

Parsons Brinckerhoff Quade & Douglas, Inc.
303 Second Street, Suite 700N
San Francisco, CA 94107

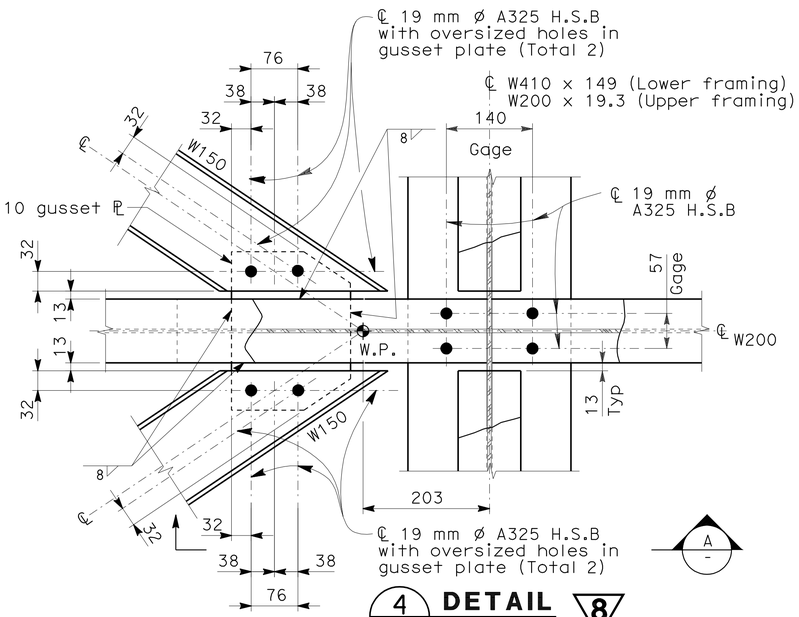

4 AS-2 **DETAIL** SCALE: 1:5 8
AS-4
AS-6

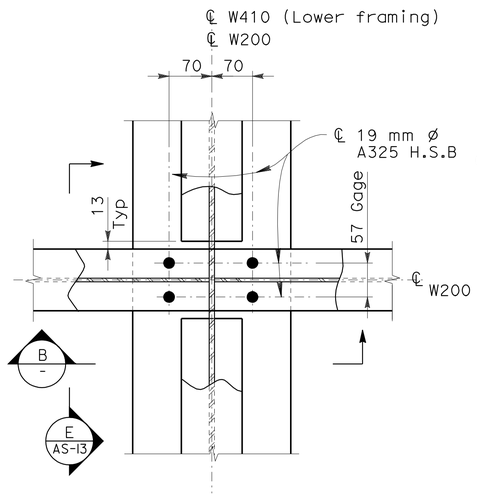

UPPER FRAMING

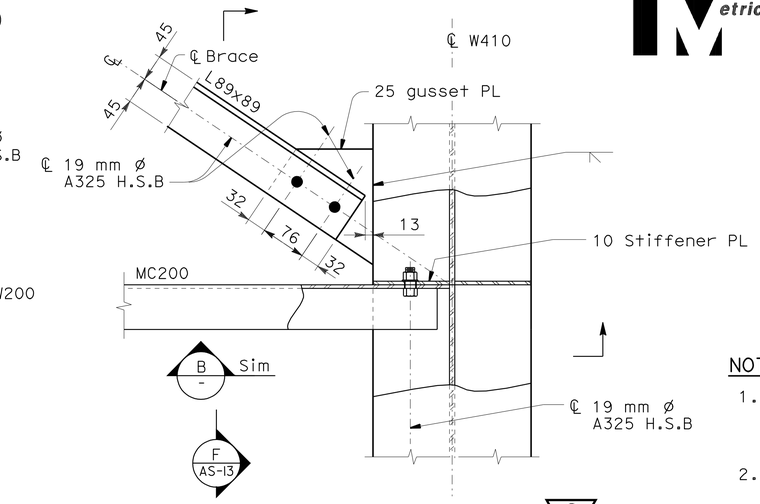

LOWER FRAMING 8

5 AS-2 **DETAIL** SCALE: 1:5
AS-4
AS-6

NOTES:

1. The contractor shall verify all controlling field dimensions before ordering or fabricating any material.
2. For locations of platform, see electrical sheets.
3. For structural notes, see "General Structural Notes" sheet AS-1.

DECKING & STUDS NOTES:

1. All Studs are 6 mm ø x 54 mm long along every W200 and C200 framing member.

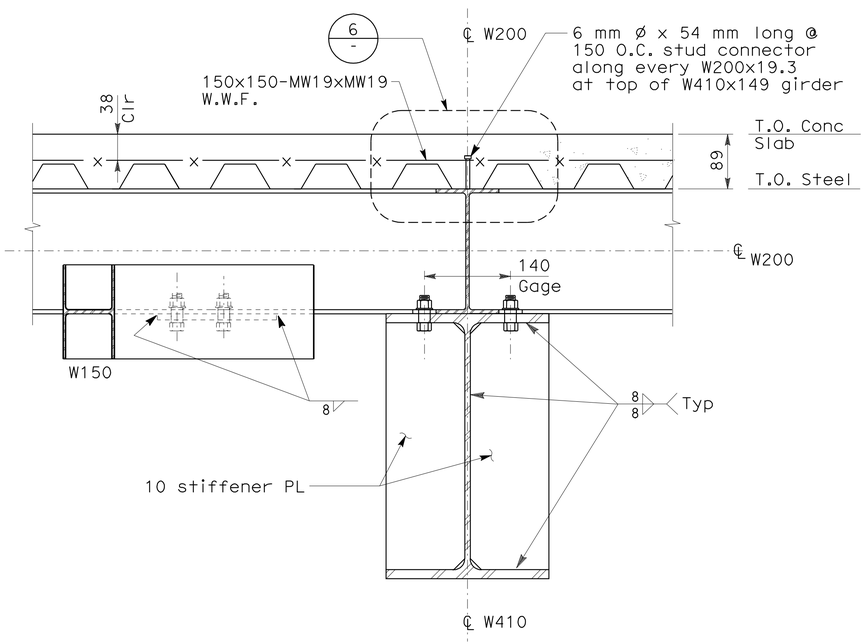

A AS-2 **SECTION** SCALE: 1:5 8

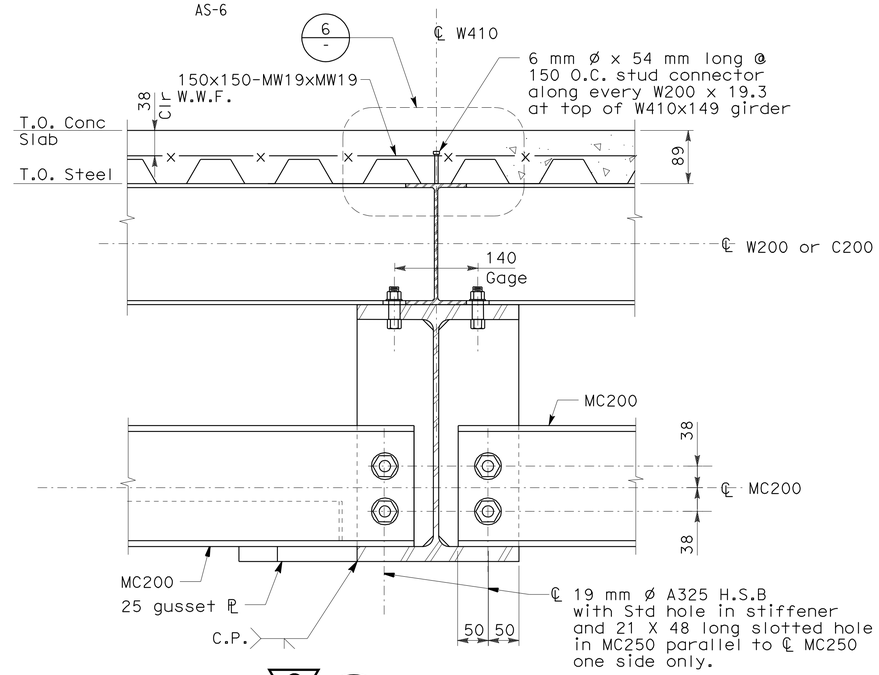

8 B AS-13 **SECTION** SCALE: 1:5

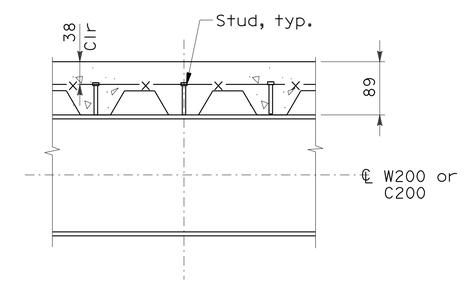

6 - **DETAIL** SCALE: 1:5

8 **REVISED PER ADDENDUM No. 8 DATED NOVEMBER 12, 2009**

ALL DIMENSIONS ARE IN MILLIMETERS UNLESS OTHERWISE SHOWN

DESIGN OVERSIGHT	DESIGN	BY G. Benkovich	CHECKED M.S. Owyang	PREPARED FOR THE STATE OF CALIFORNIA DEPARTMENT OF TRANSPORTATION	Trinh Lai PROJECT ENGINEER
SIGN OFF DATE	DETAILS	BY O. Kurnovskaya	CHECKED G. Benkovich		
	QUANTITIES	BY G. Benkovich	CHECKED M.S. Owyang		

BRIDGE NO. 34-0006
KILOMETER POST 12.7/13.2

YBI TRANSITION STRUCTURE

SERVICE PLATFORMS FRAMING DETAILS AND SECTIONS (SHEET 2 OF 3)

AS-14

DESIGN DETAIL SHEET (METRIC) (REV. 3/1/98)

ORIGINAL SCALE IN MILLIMETERS FOR REDUCED PLANS 0 10 20 30 40 50 60 70 80 90 100

CU 04251
EA 0120S1

DISREGARD PRINTS BEARING EARLIER REVISION DATES

REVISION DATES (PRELIMINARY STAGE ONLY)

SHEET 14 OF 16

FILE => 40120swc014.add

G:\1jojo\pse\0120s1\addendum8\40120swc014.add

USERNAME => trmikesl DATE PLOTTED => 09-NOV-2009 TIME PLOTTED => 13:18

DIST	COUNTY	ROUTE	KILOMETER POST TOTAL PROJECT	SHEET No	TOTAL SHEETS
04	SF	80	12.7/13.2	805	806

Caltrans Metric

Gregory Benkovich 03/11/08
REGISTERED CIVIL ENGINEER

6-23-08
PLANS APPROVAL DATE

REGISTERED PROFESSIONAL ENGINEER Gregory Benkovich No. C40518 Exp. 3/31/09 CIVIL STATE OF CALIFORNIA

The State of California or its officers or agents shall not be responsible for the accuracy or completeness of electronic copies of this plan sheet.

Parsons Brinckerhoff Quade & Douglas, Inc.
303 Second Street, Suite 700N
San Francisco, CA 94107

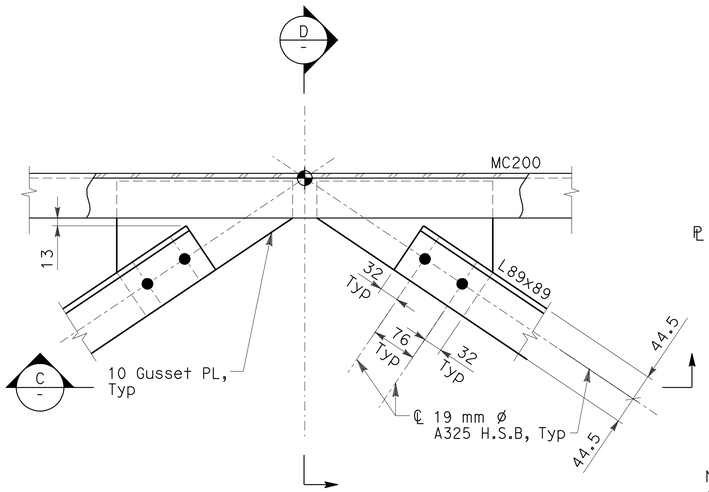

LOWER FRAMING

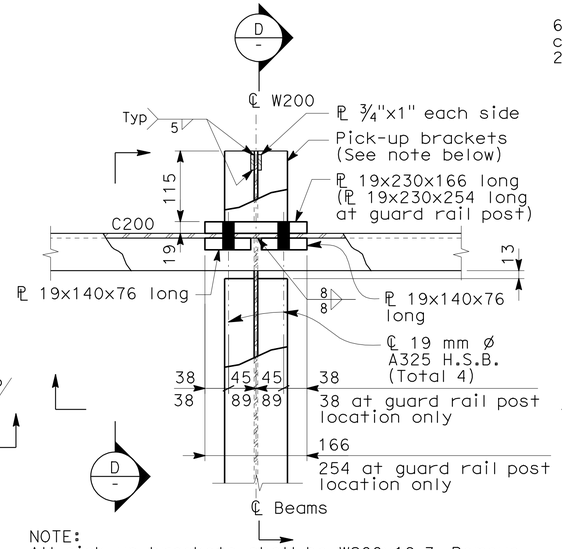

NOTE:
All pick-up brackets shall be W200x19.3. Remove W200x19.3 pick-up brackets after galvanizing. Plug and seal holes in C200. Complete galvanization at pick-up point locations.

UPPER FRAMING

8

I / AS-2 **DETAIL** SCALE: 1:5
AS-4
AS-6

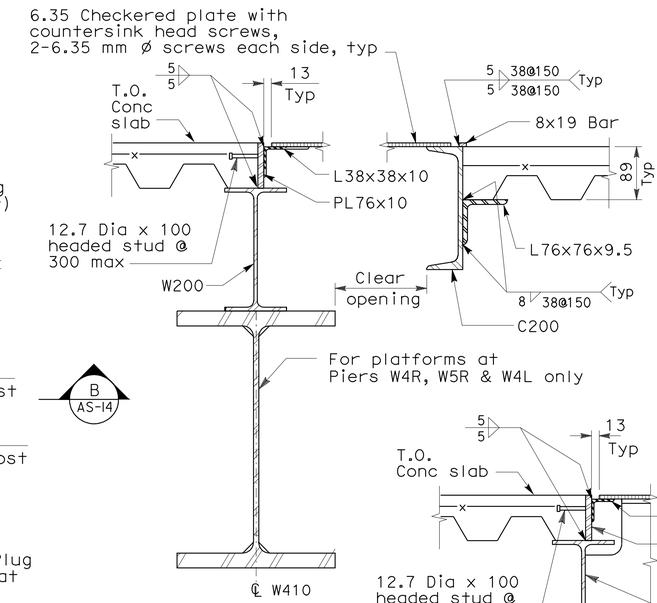

A / AS-2 **SECTION** SCALE: 1:5
AS-4

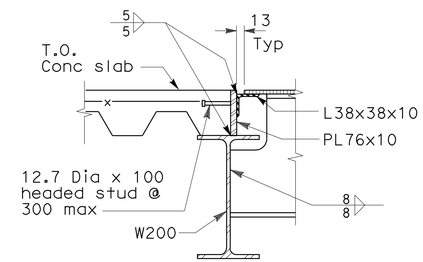

B / AS-2 **SECTION** SCALE: 1:5
AS-4

NOTES:

1. The contractor shall verify all controlling field dimensions before ordering or fabricating any material.
2. For locations of platform, see electrical sheets.
3. For structural notes, see "General Structural Notes" sheet AS-1.

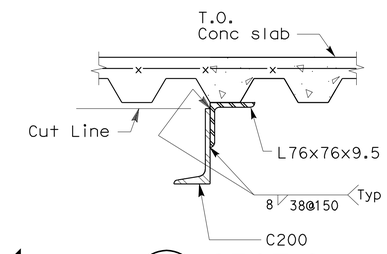

H / - **SECTION** SCALE: 1:5

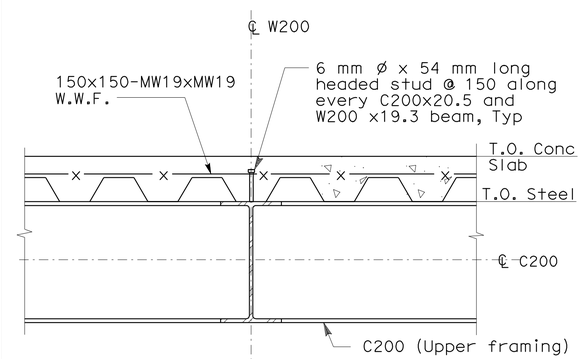

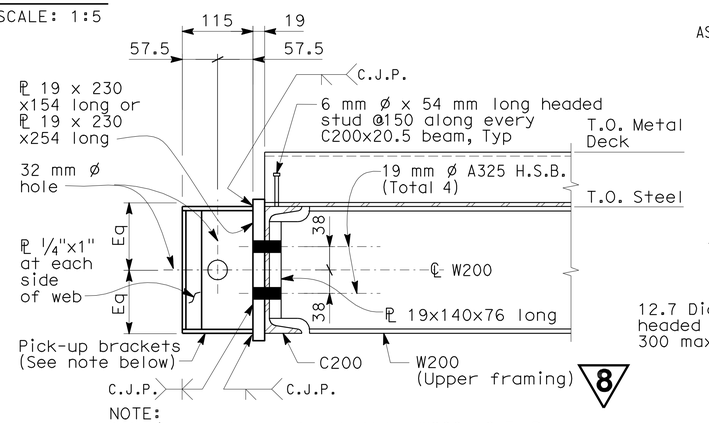

8

NOTE:
All pick-up brackets shall be W200x19.3. Remove W200x19.3 pick-up brackets after galvanizing. Plug and seal holes in C200. Complete galvanization at pick-up point locations.

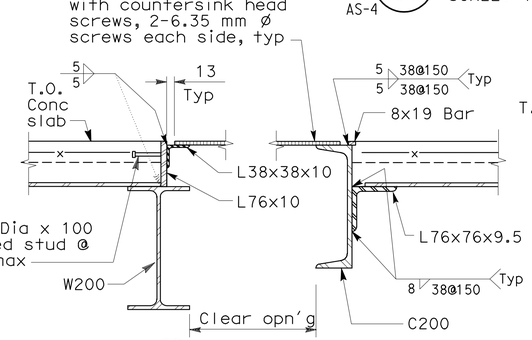

E / AS-2 **SECTION** SCALE: 1:5

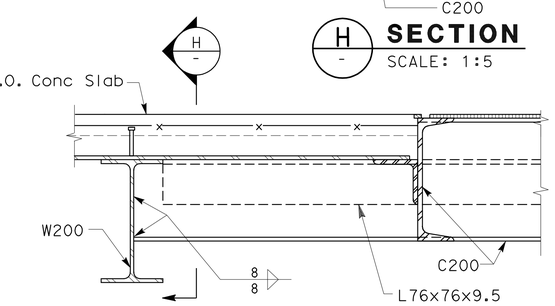

F / - **SECTION** SCALE: 1:5
AS-2
AS-4

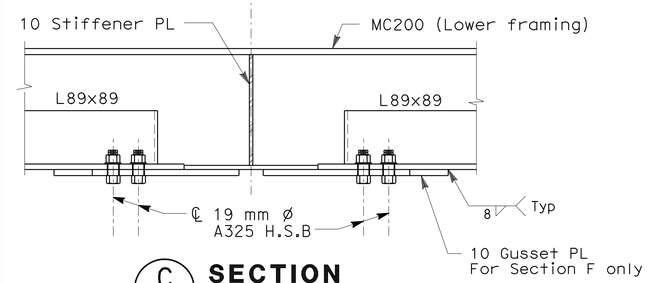

C / - **SECTION** SCALE: 1:5

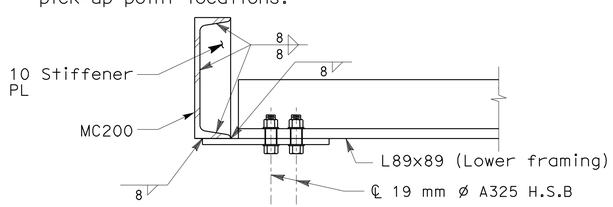

D / - **SECTION** SCALE: 1:5

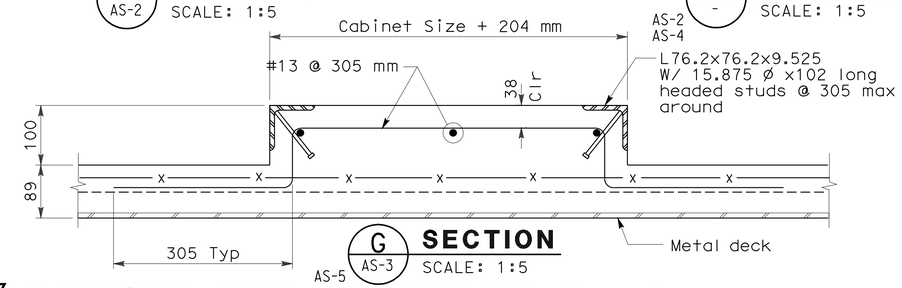

G / AS-3 **SECTION** SCALE: 1:5
AS-5

8 **REVISED PER ADDENDUM No. 8 DATED NOVEMBER 12, 2009**

ALL DIMENSIONS ARE IN MILLIMETERS UNLESS OTHERWISE SHOWN

DESIGN	BY G. Benkovich	CHECKED M.S. Owyang	
DETAILS	BY O. Kurnovskaya	CHECKED G. Benkovich	
QUANTITIES	BY G. Benkovich	CHECKED M.S. Owyang	

DESIGN OVERSIGHT

SIGN OFF DATE

DESIGN DETAIL SHEET (METRIC) (REV. 3/1/98)

ORIGINAL SCALE IN MILLIMETERS FOR REDUCED PLANS 0 10 20 30 40 50 60 70 80 90 100

PREPARED FOR THE STATE OF CALIFORNIA DEPARTMENT OF TRANSPORTATION

Trinh Lai
PROJECT ENGINEER

CU 04251
EA 0120S1

BRIDGE NO. 34-0006
KILOMETER POST 12.7/13.2

DISREGARD PRINTS BEARING EARLIER REVISION DATES

YBI TRANSITION STRUCTURE

SERVICE PLATFORMS FRAMING DETAILS AND SECTIONS (SHEET 3 OF 3)

AS-15

REVISION DATES (PRELIMINARY STAGE ONLY)

SHEET 15 OF 16

FILE => 40120swc015.add

G:\jojo\pse\0120s1\addendum8\40120swc015.add

USERNAME => trmikesi DATE PLOTTED => 09-NOV-2009 TIME PLOTTED => 13:19