FOR COMPLETE RIGHT OF WAY AND ACCURATE ACCESS DATA, SEE RIGHT OF WAY RECORD MAPS AT DISTRICT OFFICE.

CURVE DATA

No.	R	Δ	T	L	N-COORDINATE	E-COORDINATE
3	1475	13°51'19.00"	179.215	356.682	646248.013 ~~647149.180~~	1837062.828 ~~1835980.740~~
4	570	9°06'36.00"	45.411	90.630	646922.580	1836473.602
5	1466	0°58'8.00"	12.394	24.788	646272.435	1837090.147

7

Caltrans Metric

Dist	COUNTY	ROUTE	KILOMETER POST TOTAL PROJECT	SHEET No.	TOTAL SHEETS
04	SF	80	12.7/13.2	6	806

REGISTERED CIVIL ENGINEER 3-05-08 DATE

6-23-08
PLANS APPROVAL DATE

REGISTERED PROFESSIONAL ENGINEER T.T. Lai No. 63630 Exp. 9-30-08 CIVIL STATE OF CALIFORNIA

THE STATE OF CALIFORNIA OR ITS OFFICERS OR AGENTS SHALL NOT BE RESPONSIBLE FOR THE ACCURACY OR COMPLETENESS OF ELECTRONIC COPIES OF THIS PLAN SHEET.

7 **REVISED PER ADDENDUM No. 7 DATED OCTOBER 19, 2009**

EASTBOUND

FOR NOTES, ABBREVIATIONS &/OR LEGEND, SEE SHEET L-1

ALL DIMENSIONS ARE IN METERS UNLESS OTHERWISE SHOWN

LAYOUT

SCALE 1:500

L-4

REVISED BY	DATE REVISED
TL	10/07

TRINH LAI — CALCULATED-DESIGNED BY
BOB ZANDIPOUR — CHECKED BY
BOB ZANDIPOUR — FUNCTIONAL SUPERVISOR

STATE OF CALIFORNIA - DEPARTMENT OF TRANSPORTATION
Caltrans **DESIGN**

LAST REVISION 03-14-08 | DATE PLOTTED => 15-OCT-2009 | TIME PLOTTED => 10:45

Dist	COUNTY	ROUTE	KILOMETER POST TOTAL PROJECT	SHEET No.	TOTAL SHEETS
04	SF	80	12.7/13.2	13	806

REGISTERED CIVIL ENGINEER 3-05-08 DATE

6-23-08
PLANS APPROVAL DATE

REGISTERED PROFESSIONAL ENGINEER T.T. Lai No. 63630 Exp. 9-30-08 CIVIL STATE OF CALIFORNIA

THE STATE OF CALIFORNIA OR ITS OFFICERS OR AGENTS SHALL NOT BE RESPONSIBLE FOR THE ACCURACY OR COMPLETENESS OF ELECTRONIC COPIES OF THIS PLAN SHEET.

Caltrans Metric

7

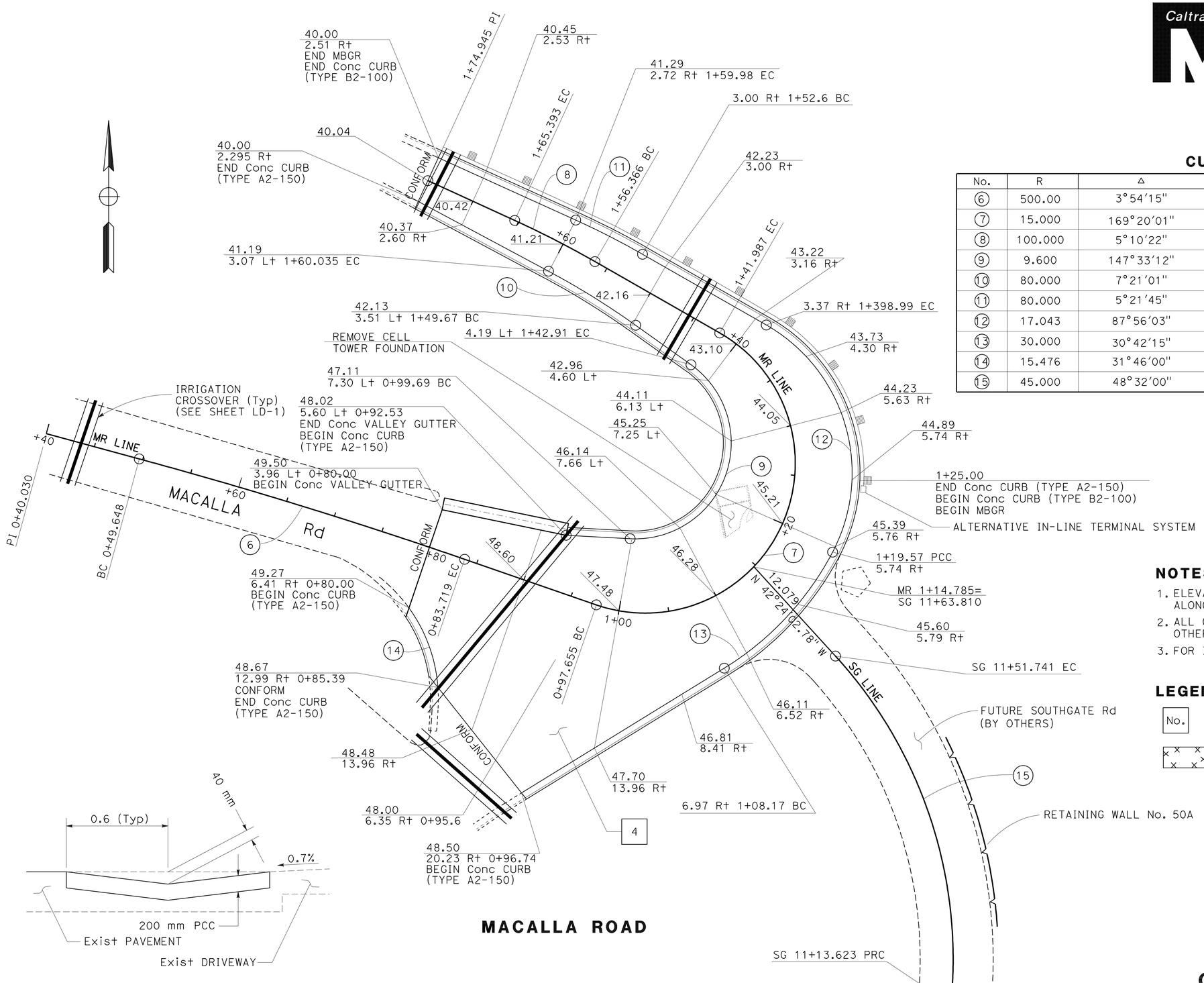

CURVE DATA

No.	R	Δ	T	L	N-COORDINATE	E-COORDINATE
6	500.00	3°54′15"	17.042	34.071	646742.766	1835725.433
7	15.000	169°20′01"	160.683	44.331	647224.880	1835907.053
8	100.000	5°10′22"	4.517	9.028	647158.226	1835852.382
9	9.600	147°33′12"	32.993	24.723	647226.908	1835906.049
10	80.000	7°21′01"	5.139	10.263	647173.537	1835859.639
11	80.000	5°21′45"	3.746	7.487	647176.319	1835867.077
12	17.043	87°56′03"	16.439	26.156	647223.902	1835910.699
13	30.000	30°42′15"	8.236	16.077	647229.922	1835899.225
14	15.476	31°46′00"	4.404	8.580	647201.327	1835870.871
15	45.000	48°32′00"	20.287	38.118	647175.246	1835892.842

NOTES:

1. ELEVATIONS SHOWN ARE 10 m APART ALONG MR LINE AND ALONG THE EDGE OF PAVEMENT UNLESS OTHERWISE NOTED.
2. ALL CONCRETE GUTTERS SHALL BE TYPE A2-150 UNLESS OTHERWISE NOTED.
3. FOR IRRIGATION CROSSOVER DETAIL SEE SHEET LD-1.

LEGEND:

No. STRUCTURAL SECTION No.

COLD PLANE AC PAVEMENT

MACALLA ROAD

Conc VALLEY GUTTER

NO SCALE

THIS PLAN ACCURATE FOR PAVEMENT ELEVATION AND CURVE DATA WORK ONLY

ALL DIMENSIONS ARE IN METERS UNLESS OTHERWISE SHOWN

CONSTRUCTION DETAILS

SCALE 1:200

7 **REVISED PER ADDENDUM No. 7 DATED OCTOBER 19, 2009**

C-1

TRINH LAI	TL	REVISED BY	10/07
BOB ZANDIPOUR		DATE REVISED	
CALCULATED-DESIGNED BY			
CHECKED BY			
FUNCTIONAL SUPERVISOR			
BOB ZANDIPOUR			

STATE OF CALIFORNIA - DEPARTMENT OF TRANSPORTATION

Caltrans DESIGN

LAST REVISION 03-15-08 DATE PLOTTED => 15-OCT-2009 TIME PLOTTED => 10:45

Dist	COUNTY	ROUTE	KILOMETER POST TOTAL PROJECT	SHEET No.	TOTAL SHEETS
04	SF	80	12.7/13.2	117	806

REGISTERED CIVIL ENGINEER 5/19/08 DATE

6-23-08
PLANS APPROVAL DATE

REGISTERED PROFESSIONAL ENGINEER A. L. ELY No. 18880 Exp. 9-30-09 CIVIL STATE OF CALIFORNIA

THE STATE OF CALIFORNIA OR ITS OFFICERS OR AGENTS SHALL NOT BE RESPONSIBLE FOR THE ACCURACY OR COMPLETENESS OF ELECTRONIC COPIES OF THIS PLAN SHEET.

T.Y. LIN / MOFFATT & NICHOL
TWO HARRISON STREET, SUITE 500
SAN FRANCISCO, CA 94105

Caltrans Metric

7

APPROXIMATE QUANTITIES

Structure excavation (Retaining wall).....	965 M3
Structure backfill (Retaining wall).....	410 M3
Structure backfill (Retaining wall)(Selected material)	125 M3
Structure backfill (Retaining wall) (Cement modified).	210 M3
Structural concrete, Retaining wall.....	25 M3
Bar reinforcing steel (Retaining wall).....	8,900 KG
Concrete barrier (Type 732 mod).....	32 M

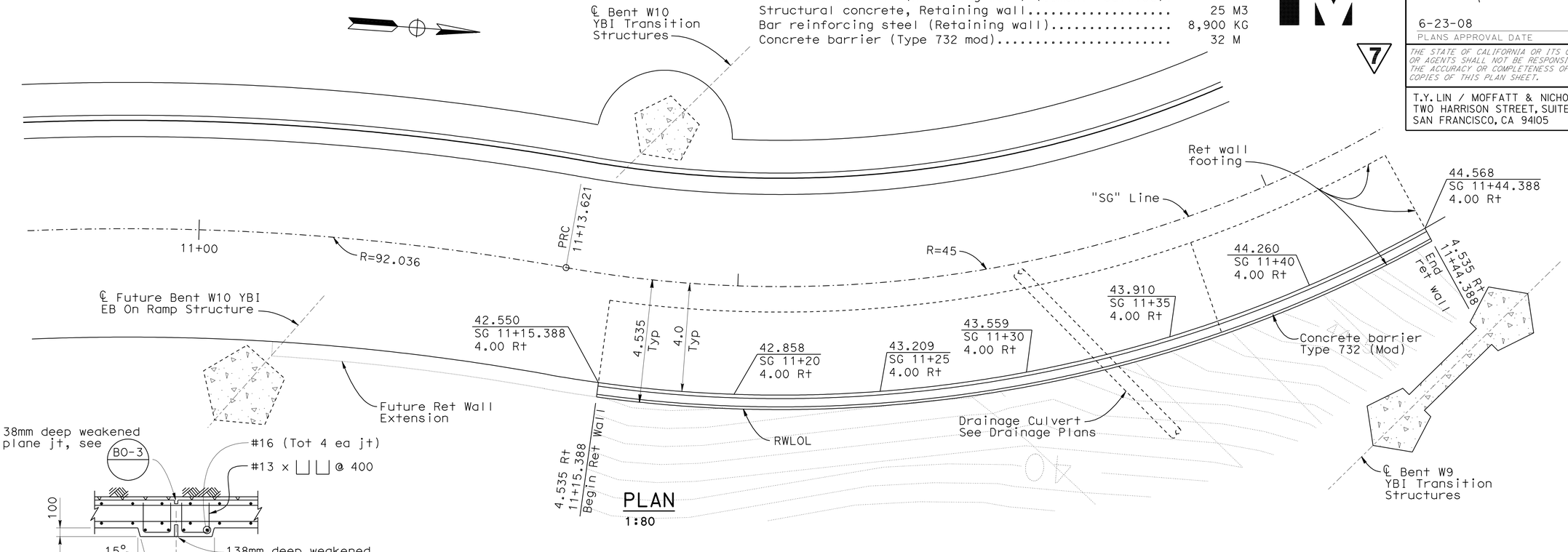

PLAN
1:80

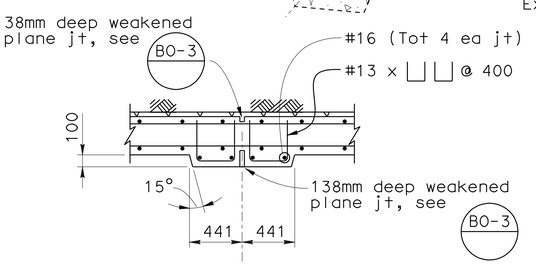

SECTION C-C
1:25

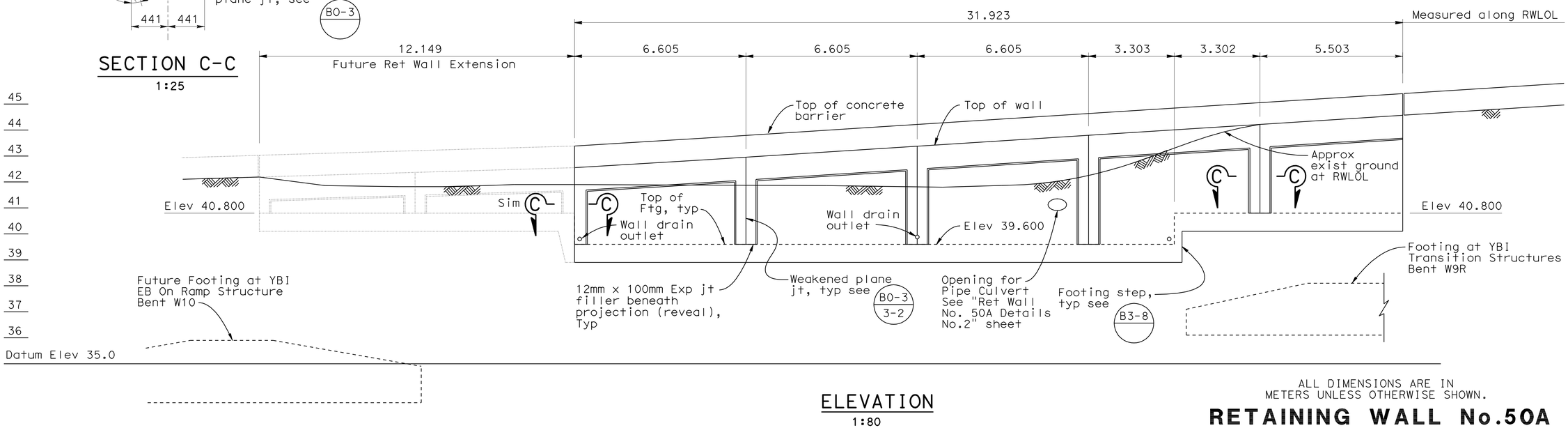

ELEVATION
1:80

ALL DIMENSIONS ARE IN METERS UNLESS OTHERWISE SHOWN.

RETAINING WALL No.50A DETAILS No.1

SCALE AS NOTED

R-5

7 **REVISED PER ADDENDUM No. 7 DATED OCTOBER 19, 2009**

REVISED BY	DATE REVISED
JNB	6/13/08
JNB	5/16/08
JNB	8/28/09

CALCULATED-DESIGNED BY: MA
CHECKED BY: MD
CONSULTANT FUNCTIONAL SUPERVISOR: BOB ZANDIPOUR

STATE OF CALIFORNIA - DEPARTMENT OF TRANSPORTATION
Caltrans

YBI STRUCTURES

August 28, 2009

LAST REVISION 06-16-08 DATE PLOTTED => 15-OCT-2009 TIME PLOTTED => 10:45

Dist	COUNTY	ROUTE	KILOMETER POST TOTAL PROJECT	SHEET No.	TOTAL SHEETS
04	SF	80	12.7/13.2	118	806

REGISTERED CIVIL ENGINEER 5/19/08 DATE

6-23-08
PLANS APPROVAL DATE

REGISTERED PROFESSIONAL ENGINEER A. L. ELY No. 18880 Exp. 9-30-09 CIVIL STATE OF CALIFORNIA

THE STATE OF CALIFORNIA OR ITS OFFICERS OR AGENTS SHALL NOT BE RESPONSIBLE FOR THE ACCURACY OR COMPLETENESS OF ELECTRONIC COPIES OF THIS PLAN SHEET.

T.Y. LIN / MOFFATT & NICHOL
TWO HARRISON STREET, SUITE 500
SAN FRANCISCO, CA 94105

Caltrans Metric

7

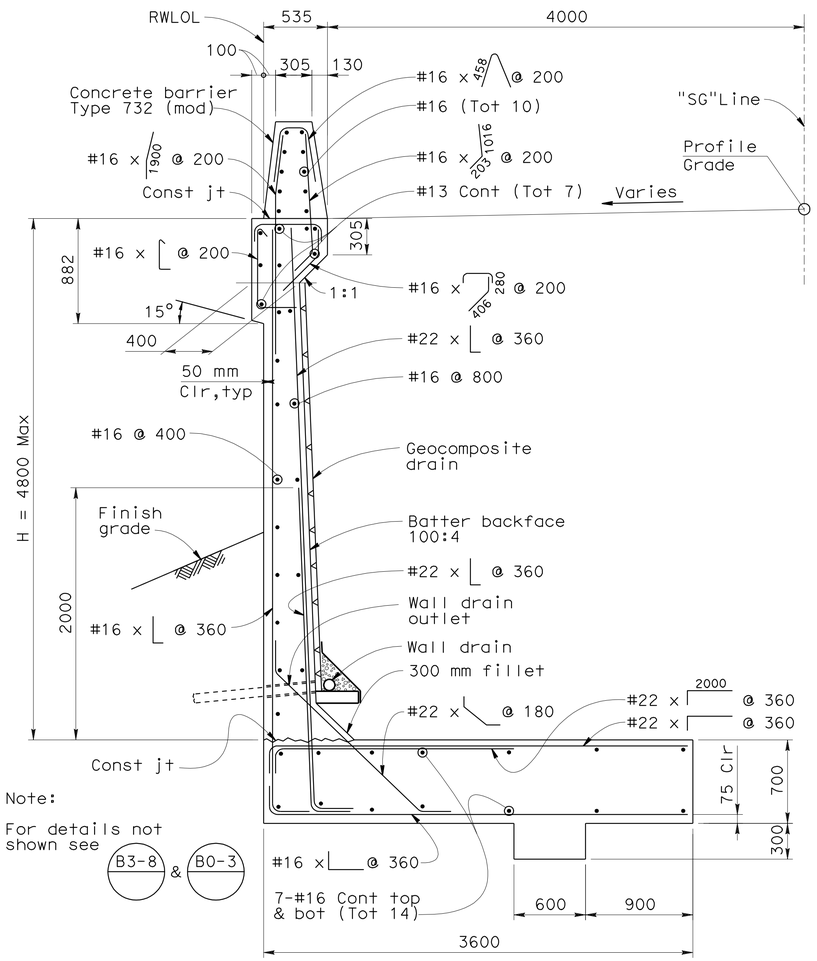

Note:
For details not shown see B3-8 & B0-3

TYPICAL SECTION
1:25

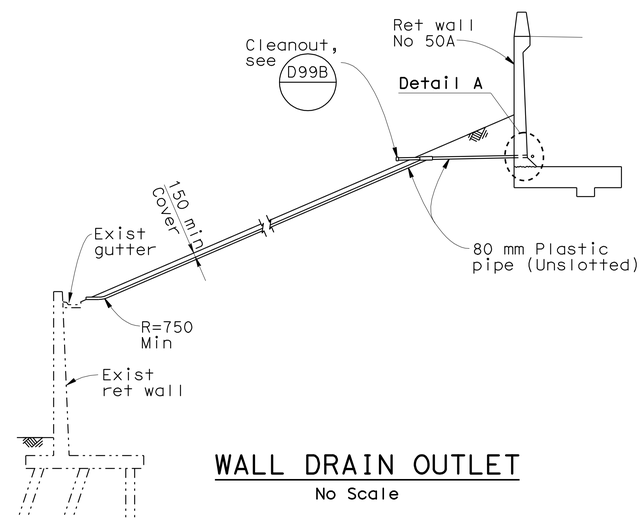

WALL DRAIN OUTLET
No Scale

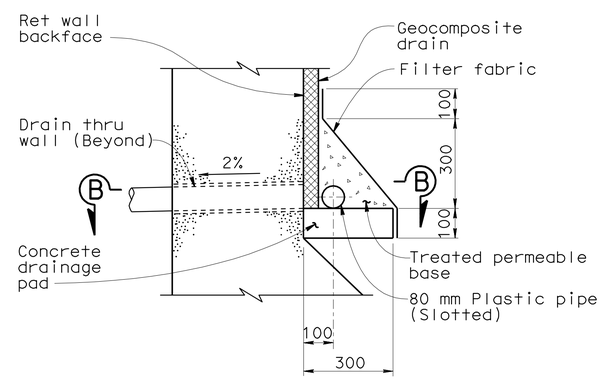

DETAIL A
No Scale

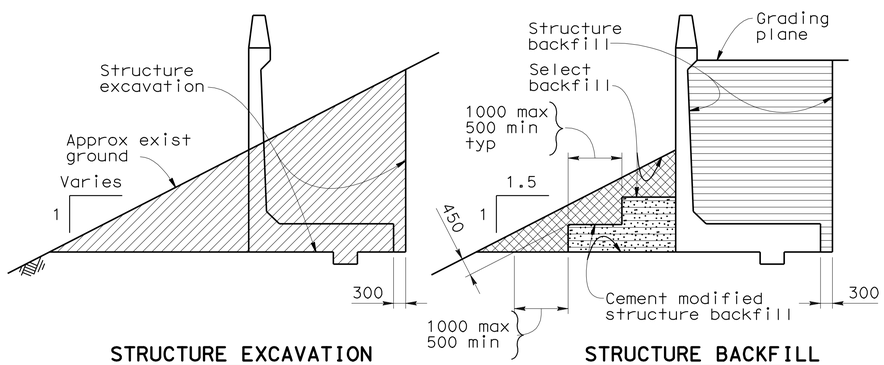

STRUCTURE EXCAVATION

STRUCTURE BACKFILL

LIMITS OF PAYMENT FOR STRUCTURE EXCAVATION & BACKFILL
(FOR DETAILS NOT SHOWN SEE A62B)
NO SCALE

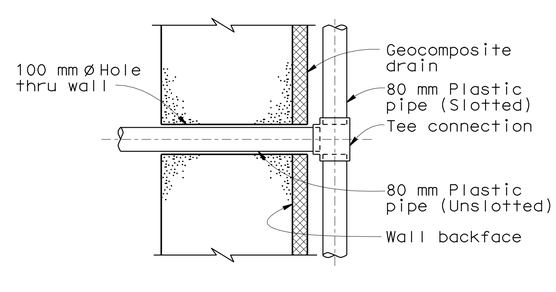

SECTION B-B
No Scale

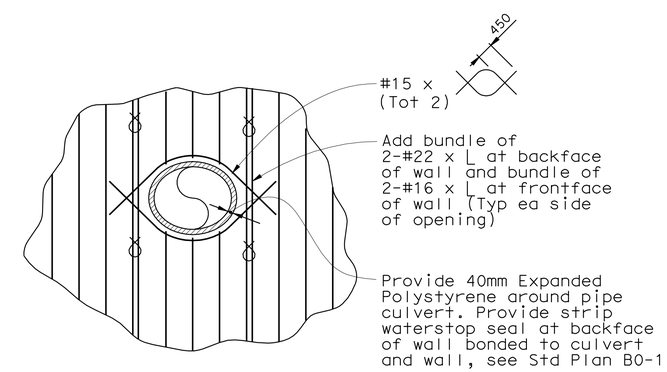

DETAIL AT OPENING IN WALL FOR PIPE CULVERT
1:20

ALL DIMENSIONS ARE IN MILLIMETERS UNLESS OTHERWISE SHOWN.

RETAINING WALL No.50A DETAILS No.2
SCALE AS NOTED

7 **REVISED PER ADDENDUM No. 7 DATED OCTOBER 19, 2009**

R-6

JNB	6/13/08		
JNB	5/16/08		
JNB	8/28/09		
REVISED BY	DATE REVISED		
MA	MD	CALCULATED-DESIGNED BY	CHECKED BY

SUPERVISOR BOB ZANDIPOUR — CONSULTANT FUNCTIONAL SUPERVISOR

STATE OF CALIFORNIA - DEPARTMENT OF TRANSPORTATION — Caltrans

YBI STRUCTURES — August 28, 2009

LAST REVISION 06-16-08 — DATE PLOTTED => 15-OCT-2009 — TIME PLOTTED => 10:45

Dist	COUNTY	ROUTE	KILOMETER POST TOTAL PROJECT	SHEET No.	TOTAL SHEETS
04	SF	80	12.7/13.2	171	806

REGISTERED ELECTRICAL ENGINEER 2/14/08

6-23-08
PLANS APPROVAL DATE

REGISTERED PROFESSIONAL ENGINEER FADI WALIEDDINE No. 11465 Exp. 12/31/09 ELECTRICAL STATE OF CALIFORNIA

THE STATE OF CALIFORNIA OR ITS OFFICERS OR AGENTS SHALL NOT BE RESPONSIBLE FOR THE ACCURACY OR COMPLETENESS OF ELECTRONIC COPIES OF THIS PLAN SHEET.

PB AMERICAS, Inc.
A Parsons Brinckerhoff Company
303 Second St., Suite 700N
San Francisco, CA 94107-1317

Caltrans Metric

NOTES:

1. References:
   - For lighting poles, outlet boxes and pull box schedules, see sheets E-68 and E-69.
   - For call box mounting detail, see sheet E-60.
   - For 480 V roadway lighting wiring see sheets E-53 through E-57.

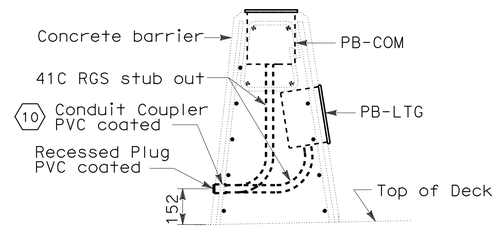

DETAIL 1
NO SCALE

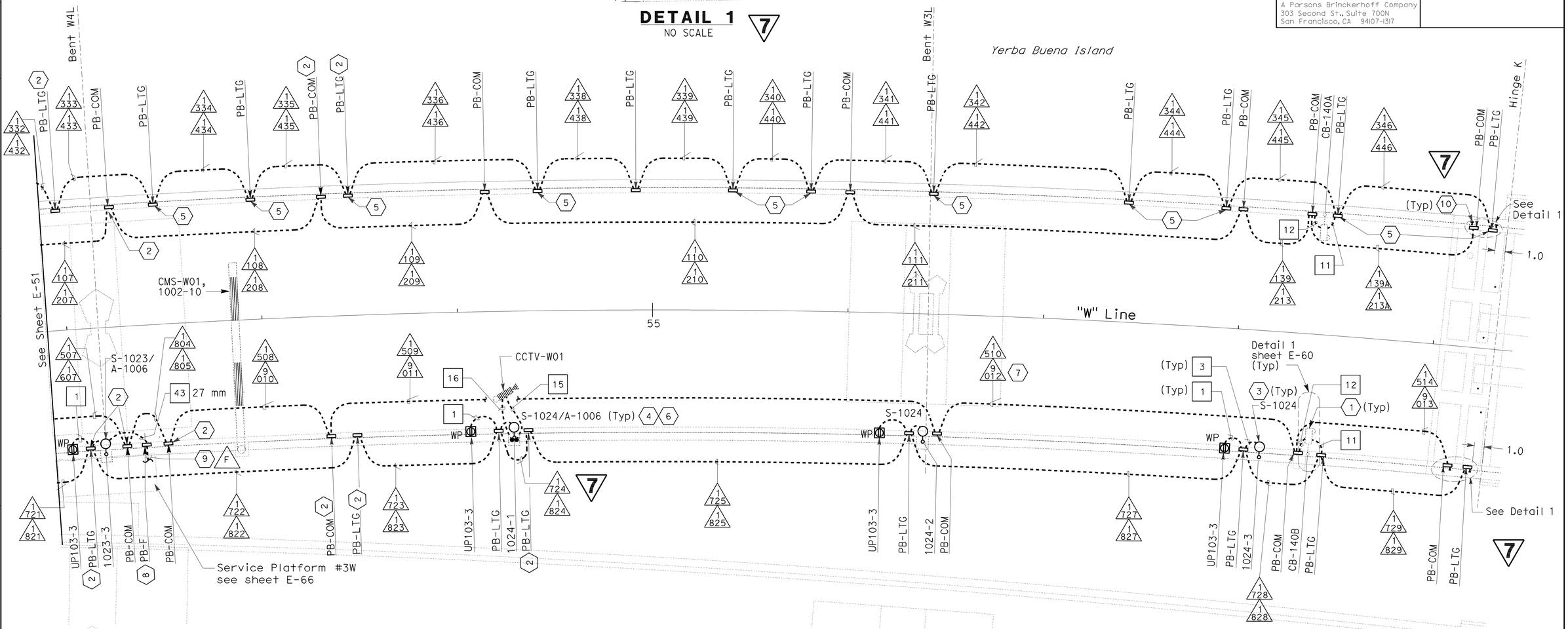

CONDUIT PLAN

SHEET NOTES:

1. For call box schedule and wiring diagram, see sheets E-170 & E-172.
2. For routing of conduit in girder and crossing of roadway, see sheets E-73 thru E-76.
3. For conduit routing inside barriers and pole bases, see sheets E-58 thru E-60.
4. For 480 V roadway lighting wiring diagrams, see sheets E-53 thru E-57.
5. For routing of light pipe conduit, down to girder level, see sheet E-76.
6. For lighting schedules, see sheet E-68.
7. Conduits to be installed in this contract but are reserved for SMD.
8. PB-F same as PB-COM, labeling to be determined by the Engineer.
9. Install 41 mm (F) conduit in barrier from Platform 3W for future Camera #16 (By others).
10. Conduit shall stub-out at the non-roadway side of the barrier with the coupler flush to the barrier face wall and shall include a plug.

7 **REVISED PER ADDENDUM No. 7 DATED OCTOBER 19, 2009**

THIS PLAN IS ACCURATE FOR ELECTRICAL WORK ONLY.

ALL DIMENSIONS ARE IN METERS UNLESS OTHERWISE SHOWN

YBI TRANSITION STRUCTURES ROADWAY WESTBOUND
(LIGHTING AND ELECTRICAL SYSTEMS)

SCALE: 1:200

E-52

REVISED BY	DATE REVISED
FK	AB

CALCULATED-DESIGNED BY / CHECKED BY

CONSULTANT FUNCTIONAL SUPERVISOR: BEHZAD GOLEMOHAMMADI

STATE OF CALIFORNIA - DEPARTMENT OF TRANSPORTATION
Caltrans

LAST REVISION 00-00-00 | DATE PLOTTED => 15-OCT-2009 | TIME PLOTTED => 1225

Dist	COUNTY	ROUTE	KILOMETER POST TOTAL PROJECT	SHEET No.	TOTAL SHEETS
04	SF	80	12.7/13.2	181	806

REGISTERED ELECTRICAL ENGINEER 2/14/08

6-23-08
PLANS APPROVAL DATE

REGISTERED PROFESSIONAL ENGINEER FADI WALIEDDINE No. 11465 Exp. 12/31/09 ELECTRICAL STATE OF CALIFORNIA

THE STATE OF CALIFORNIA OR ITS OFFICERS OR AGENTS SHALL NOT BE RESPONSIBLE FOR THE ACCURACY OR COMPLETENESS OF ELECTRONIC COPIES OF THIS PLAN SHEET.

PB AMERICAS, Inc.
A Parsons Brinckerhoff Company
303 Second St., Suite 700N
San Francisco, CA 94107-1317

Caltrans Metric

7

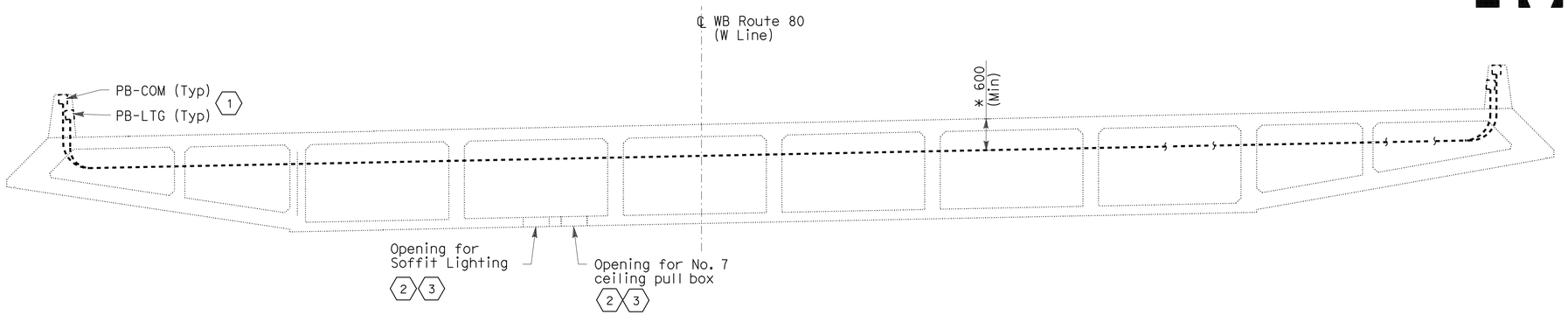

SECTION A-A AT BENT W10L 7

NO SCALE

NOTE:

1. Reference
   - (*) Dimension is provided by structures plan sheets.

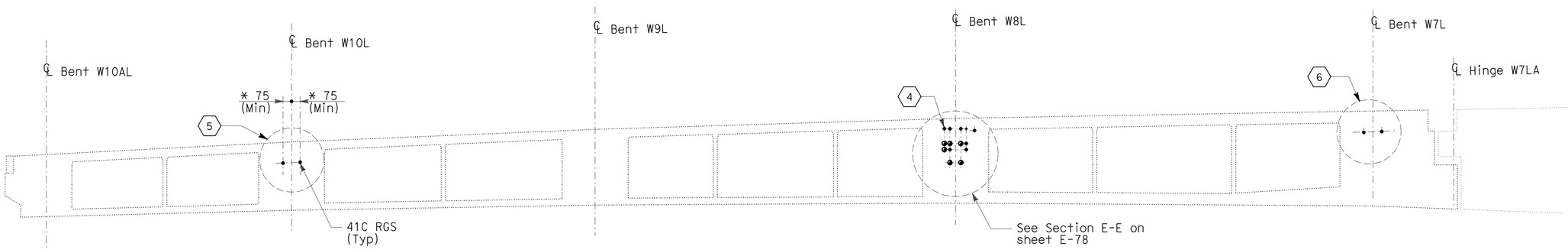

LONGITUDINAL SECTION - FRAME 1

NO SCALE

SHEET NOTES:

1. For locations of PB-LTG and PB-COM, see sheets E-49 to E-52.
2. For soffit lighting plan, see sheets E-73 thru E-76.
3. For soffit light fixture and No. 7 ceiling pull box mounting, see Standard Plans sheet ES-9E, Detail "F".
4. For embedded conduit layout, see sheet E-81.
5. For embedded conduit, see sheet E-73.
6. For embedded conduit, see sheets E-74 to E-76.
7. Section A-A shown is from Bent W10L, see sheet E-73.
8. Section F-F shown is from Bent W8L, see sheet E-81.

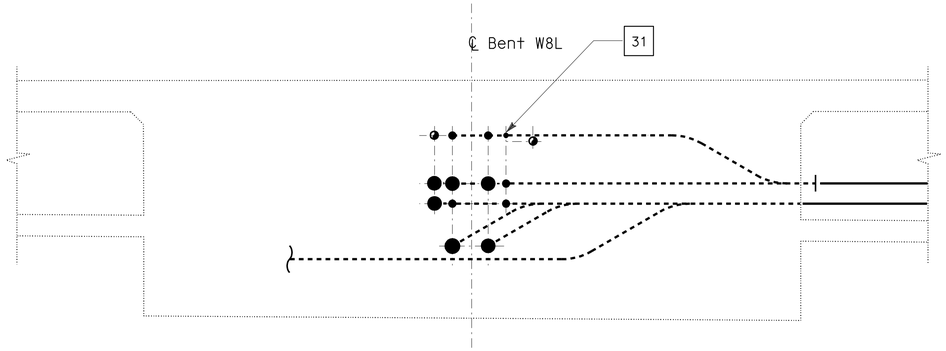

SECTION F-F 8

NO SCALE

7 **REVISED PER ADDENDUM No. 7 DATED OCTOBER 19, 2009**

DETAILS

YBI TRANSITION STRUCTURES ROADWAY WESTBOUND (SECTIONS)

SCALE AS NOTED

E-62

THIS PLAN ACCURATE FOR ELECTRICAL WORK ONLY.

ALL DIMENSIONS ARE IN MILLIMETERS UNLESS OTHERWISE SHOWN

STATE OF CALIFORNIA - DEPARTMENT OF TRANSPORTATION
Caltrans

CONSULTANT FUNCTIONAL SUPERVISOR: BEHZAD GOLEMOHAMMADI

CALCULATED-DESIGNED BY: FK
CHECKED BY: AB

REVISED BY | DATE REVISED

LAST REVISION 00-00-00 | DATE PLOTTED => 15-OCT-2009 | TIME PLOTTED => 12:25

Dist	COUNTY	ROUTE	KILOMETER POST TOTAL PROJECT	SHEET No.	TOTAL SHEETS
04	SF	80	12.7/13.2	183	806

REGISTERED ELECTRICAL ENGINEER 2/14/08

6-23-08
PLANS APPROVAL DATE

REGISTERED PROFESSIONAL ENGINEER FADI WALIEDDINE No. 11465 Exp. 12/31/09 ELECTRICAL STATE OF CALIFORNIA

THE STATE OF CALIFORNIA OR ITS OFFICERS OR AGENTS SHALL NOT BE RESPONSIBLE FOR THE ACCURACY OR COMPLETENESS OF ELECTRONIC COPIES OF THIS PLAN SHEET.

PB AMERICAS, Inc.
A Parsons Brinckerhoff Company
303 Second St., Suite 700N
San Francisco, CA 94107-1317

Caltrans Metric

NOTES:

1. For pull box schedule, refer to sheet E-69.
2. Conduit openings and locations through diaphragm, refer to structures sheets.
3. For details of embed steel plates, refer to AS sheets.
4. Ground conductor routed outside or exposed shall be green insulated.
5. Conduits terminating inside vaults shall be provided with ground insulated bushing connected to ground bar.

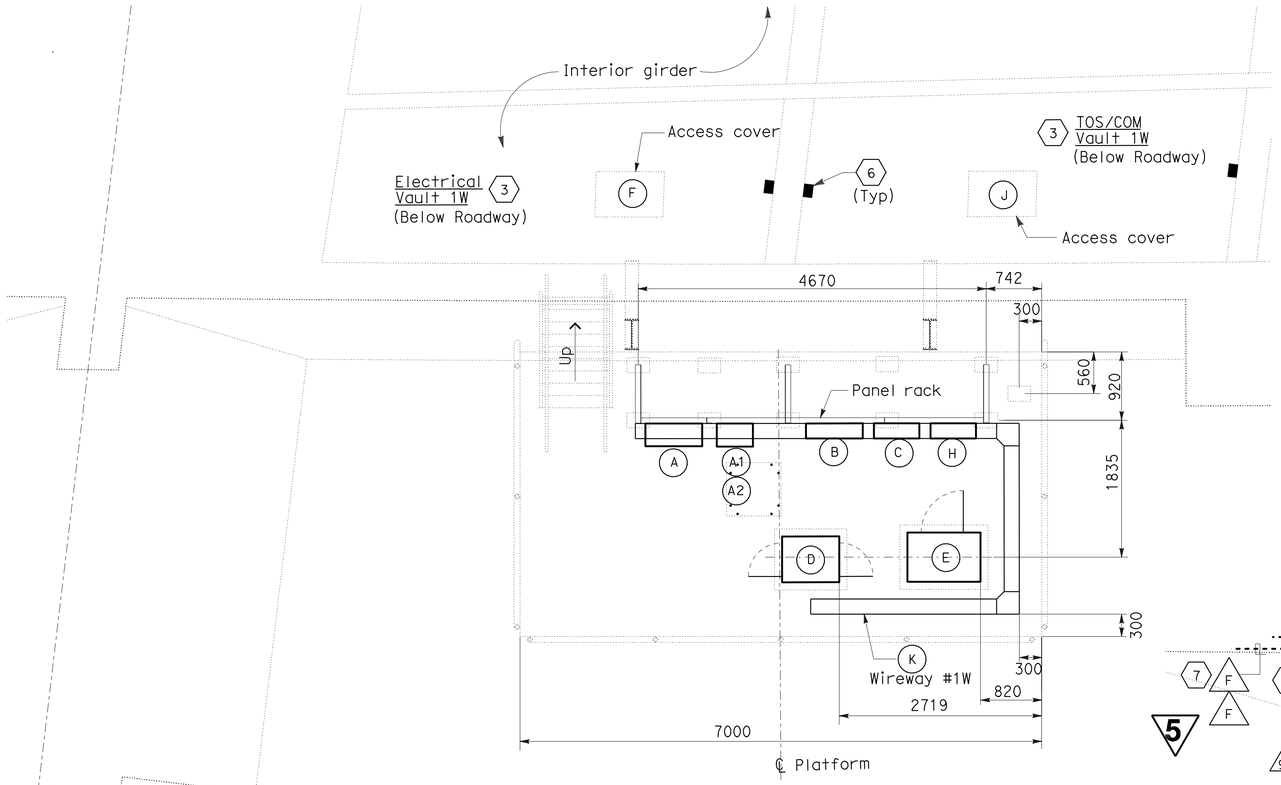

SERVICE PLATFORM #1W EQUIPMENT ARRANGEMENT PLAN (2)

SCALE: 1:40

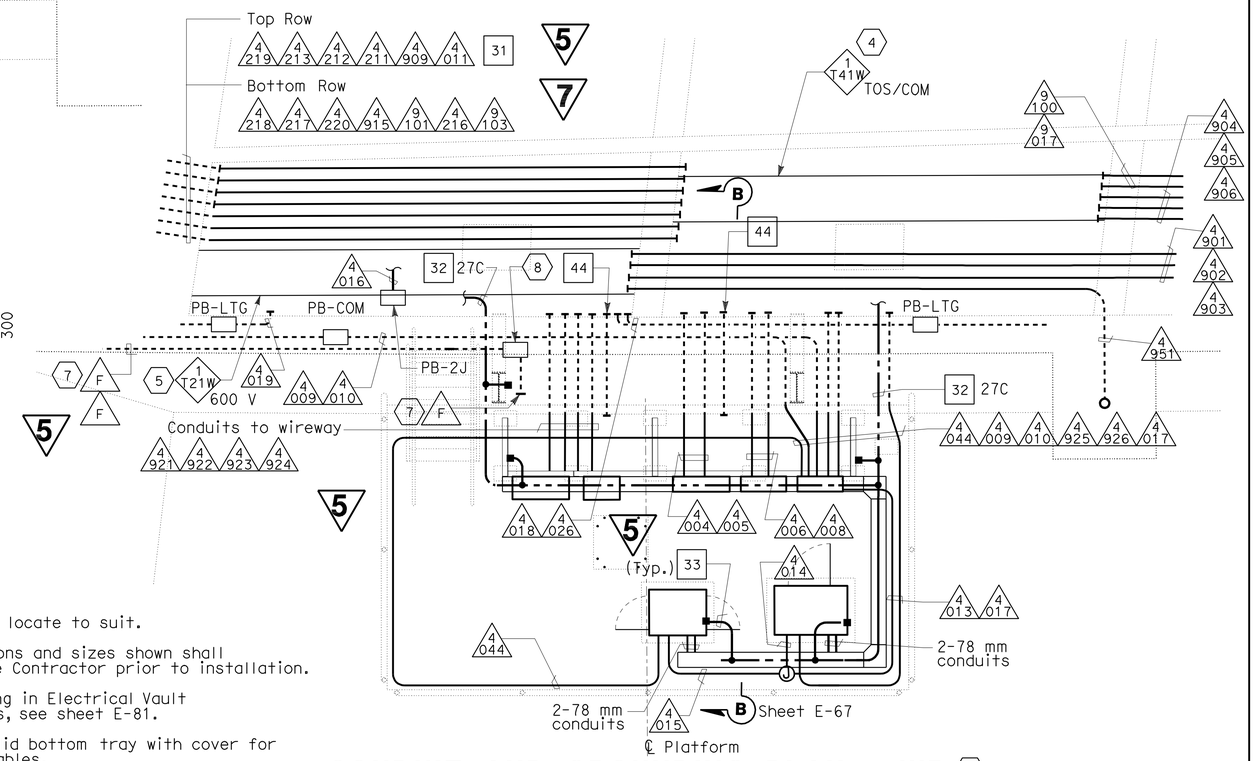

CONDUIT AND GROUNDING PLAN - WB (3)

SCALE: 1:40

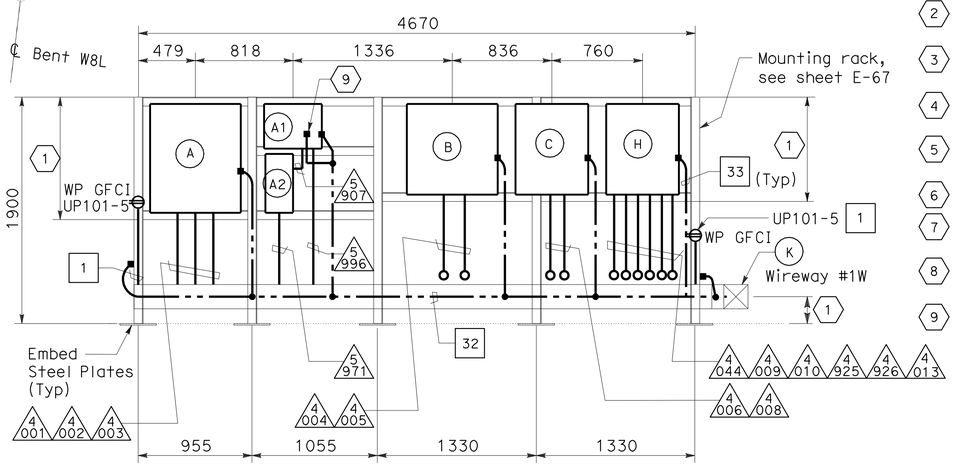

PANEL RACK-ELEVATION

SCALE: 1:25

SHEET NOTES:

1. The Contractor to locate to suit.
2. Equipment dimensions and sizes shown shall be verified by the Contractor prior to installation.
3. For conduit routing in Electrical Vault and TOS/COM Vaults, see sheet E-81.
4. Install 610 mm solid bottom tray with cover for routing TOS/COM cables.
5. Install 610 mm ladder type tray for routing 600 V rated cable.
6. Install pull irons in all vaults, cast in each end wall.
7. Install 41 mm (F) conduit from Platform 1W, in the barrier.
8. PB-F same as PB-COM, label to be determined by the Engineer.
9. Connect to transformer neutral. See panel schedule.

EQUIPMENT SCHEDULE: (2)

- (A) Utility Panel UP-101, 100 A 208/120 V, 3 Phase, 4 Wires (PB-8A).
- (A1) 15 kVA Transformer, 3 Phase, 4 Wires 480 V-208/120 V, 60 HZ. (Nema 4X) Size: 375 H x 485 W x 311 D.
- (A2) Enclosed molded case circuit breaker Size: 495 H x 232 W x 124 D.
- (B) Scada Communication Terminal Box #COM-01W (PB-7B).
- (C) Telephone Terminal Box #TEL-01W (PB-7C).
- (D) Controller Cabinet #TOS-01WA Size: 1625 H x 615 W x 768 D.
- (E) TOS Splice Cabinet TOS-01WS Size: 1400 H x 980 W x 660 D.
- (H) PB-2B, mounted on panel rack.
- (K) 600 V Wireway #1W, (Nema 4X) 203 H x 203 W

MISCELLANEOUS:

- (F) Deck utility opening and cover. Engraving "ELECTRICAL VAULT 1W". Refer to Structures plan sheet, miscellaneous superstructure details No. 2.
- (J) Deck utility opening and cover. Engraving "TOS/COM 1W". Refer to Structures plan sheet, miscellaneous superstructure details No. 2.

DETAILS

7 REVISED PER ADDENDUM No. 7 DATED OCTOBER 19, 2009

5 REVISED PER ADDENDUM No. 5 DATED JULY 30, 2009

YBI TRANSITION STRUCTURES ROADWAY WESTBOUND (PLATFORM 1W ARRANGEMENT AND PLAN)

SCALE AS NOTED

E-64

THIS PLAN IS ACCURATE FOR ELECTRICAL WORK ONLY.

ALL DIMENSIONS ARE IN MILLIMETERS UNLESS OTHERWISE SHOWN

REVISED BY	DATE REVISED
FK	AB

CALCULATED-DESIGNED BY / CHECKED BY

CONSULTANT FUNCTIONAL SUPERVISOR: BEHZAD GOLEMOHAMMADI

STATE OF CALIFORNIA - DEPARTMENT OF TRANSPORTATION

Caltrans

LAST REVISION 00-00-00 | DATE PLOTTED => 15-OCT-2009 | TIME PLOTTED => 10:46

Dist	COUNTY	ROUTE	KILOMETER POST TOTAL PROJECT	SHEET No.	TOTAL SHEETS
04	SF	80	12.7/13.2	197	806

REGISTERED ELECTRICAL ENGINEER — DATE 2/14/08

6-23-08
PLANS APPROVAL DATE

REGISTERED PROFESSIONAL ENGINEER — FADI WALIEDDINE No. 11465 Exp. 12/31/09 ELECTRICAL — STATE OF CALIFORNIA

THE STATE OF CALIFORNIA OR ITS OFFICERS OR AGENTS SHALL NOT BE RESPONSIBLE FOR THE ACCURACY OR COMPLETENESS OF ELECTRONIC COPIES OF THIS PLAN SHEET.

PB AMERICAS, Inc.
A Parsons Brinckerhoff Company
303 Second St., Suite 700N
San Francisco, CA 94107-1317

Caltrans Metric

5

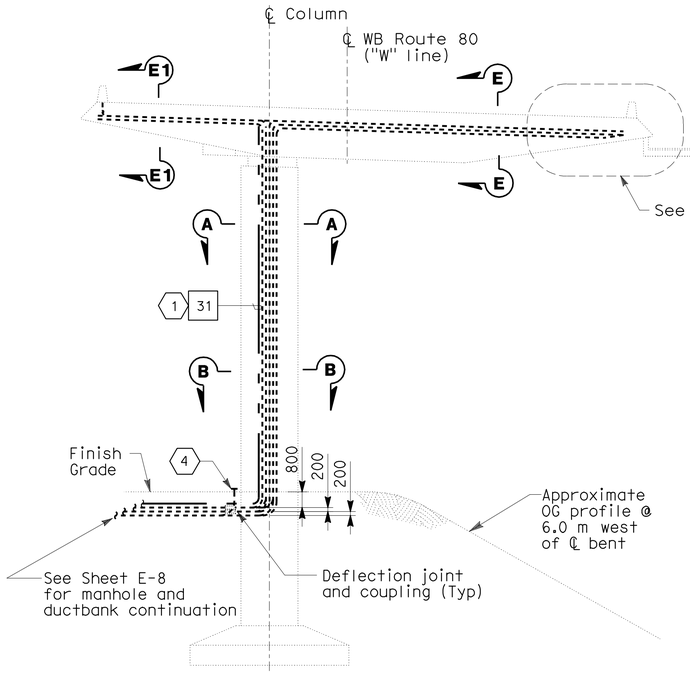

BENT W8L ELEVATION
SCALE: 1:150

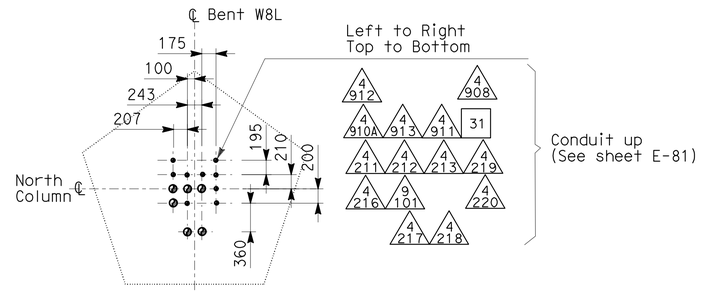

SECTION A-A
NO SCALE 7

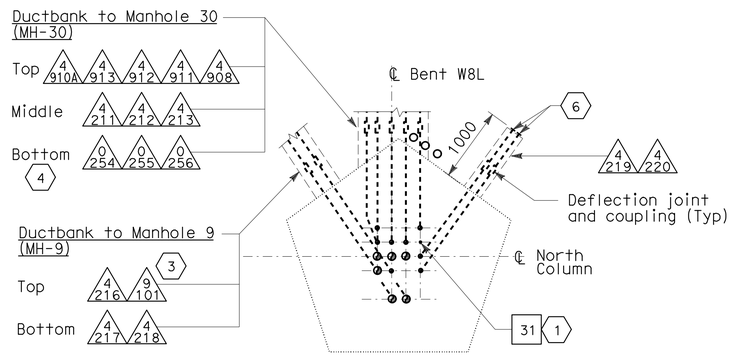

SECTION B-B
NO SCALE 7

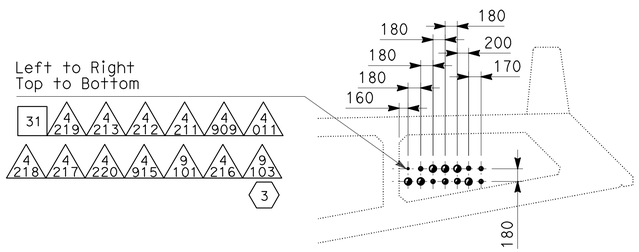

DETAIL 1 - BENT W8L
Looking East
NO SCALE 5 7

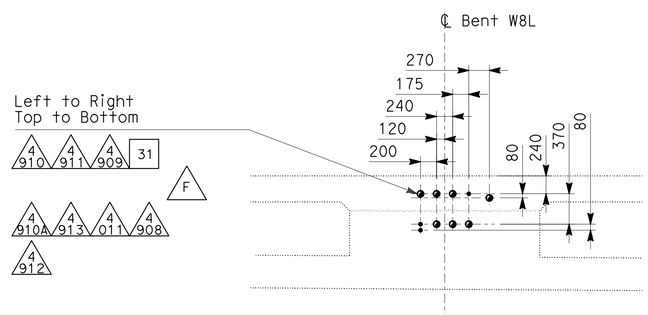

SECTION E1-E1
NO SCALE 7

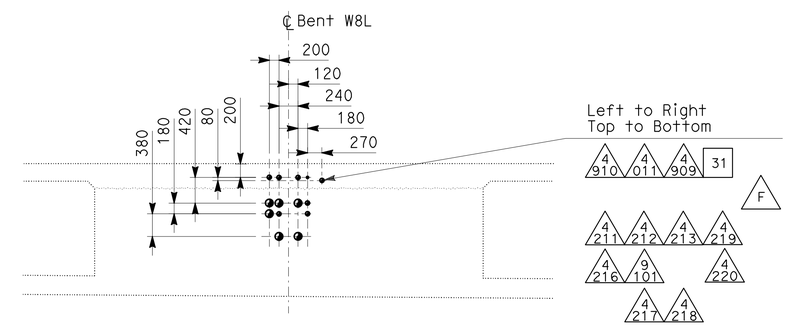

SECTION E-E
NO SCALE 7

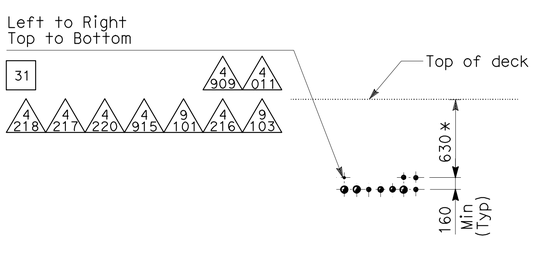

SECTION D-D
NO SCALE 5 7

NOTES:

1. References:
   - For service platform, details refer to sheets E-64 thru E-66.
   - (*) Dimension to be provided by Structural.

SHEET NOTES:

1. Ground conductor for 250 kcmil bare copper wire. Routed inside underground duct banks in column Bent W8, connected and tapped from ground bar for service platform grounding system. Refer to sheets E-34 and E-79.
2. For typical conduit support, see sheet E-86.
3. Conduits to be installed in this contract but are reserved for future SMD.
4. Stub-out and cap conduits 0254, 0255 and 0256, 150 mm from the column edge.
5. Detail 1 and section D-D shown is from Bent W8L, see sheet E-81.
6. Stub out and cap conduits for future use.
7. The embedded conduits may be adjusted to avoid interference with rebars.

7

7 **REVISED PER ADDENDUM No. 7 DATED OCTOBER 19, 2009**

5 **REVISED PER ADDENDUM No. 5 DATED JULY 30, 2009**

DETAILS
YBI TRANSITION STRUCTURES GIRDER WESTBOUND (BENT W8L ELEVATION AND SECTIONS)
SCALE AS NOTED

STRUCTURE DETAILS OF CONDUIT RISER TO W8L
7

THIS PLAN ACCURATE FOR ELECTRICAL WORK ONLY.

ALL DIMENSIONS ARE IN MILLIMETERS UNLESS OTHERWISE SHOWN

E-78

REVISED BY	DATE REVISED
AB	FK

CALCULATED-DESIGNED BY / CHECKED BY

CONSULTANT FUNCTIONAL SUPERVISOR: BEHZAD GOLEMOHAMMADI

STATE OF CALIFORNIA - DEPARTMENT OF TRANSPORTATION — Caltrans

LAST REVISION 00-00-00 — DATE PLOTTED => 15-OCT-2009 — TIME PLOTTED => 10:46

Dist	COUNTY	ROUTE	KILOMETER POST TOTAL PROJECT	SHEET No.	TOTAL SHEETS
04	SF	80	12.7/13.2	200	806

2/14/08
REGISTERED ELECTRICAL ENGINEER

6-23-08
PLANS APPROVAL DATE

REGISTERED PROFESSIONAL ENGINEER FADI WALIEDDINE No. 11465 Exp. 12/31/09 ELECTRICAL STATE OF CALIFORNIA

THE STATE OF CALIFORNIA OR ITS OFFICERS OR AGENTS SHALL NOT BE RESPONSIBLE FOR THE ACCURACY OR COMPLETENESS OF ELECTRONIC COPIES OF THIS PLAN SHEET.

PB AMERICAS, Inc.
A Parsons Brinckerhoff Company
303 Second St., Suite 700N
San Francisco, CA 94107-1317

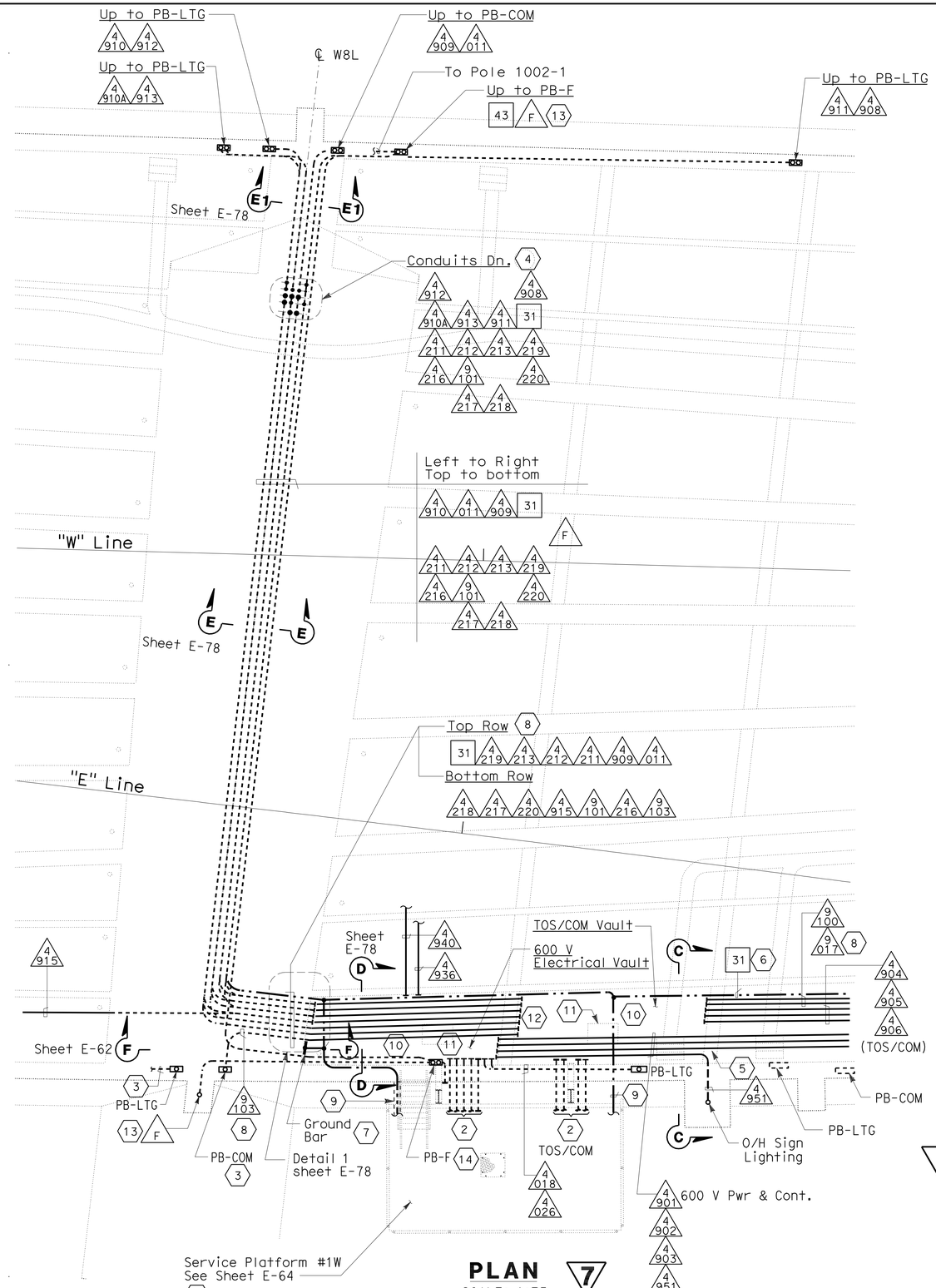

PLAN 7
SCALE: 1:75

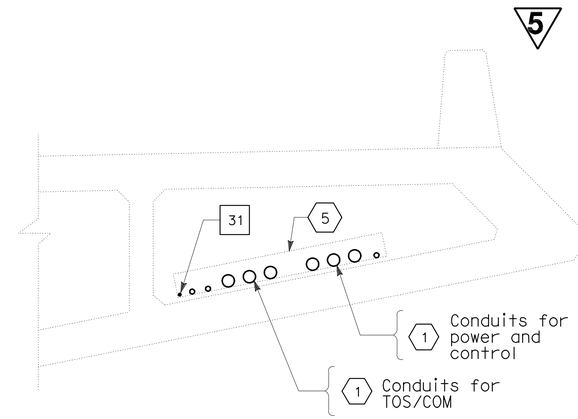

SECTION C-C 7
NO SCALE

SHEET NOTES:

1. For conduit No. refer to plan layout as shown, U.N.O. see sheet E-50.
2. For Service Platform #1W equipment, conduit and grounding plan, see sheet E-64.
3. For conduit routing up to PB-LTG or PB-COM, see sheets E-50.
4. For embedded conduits in column. See sheet E-78.
5. For utility opening, see Structures Sheets.
6. For ground conductor 250 kcmil Bare copper, route inside underground duct bank and connect to main 500 kcmil system ground conductor. Refer to sheet E-79.
7. For grounding details see sheet E-80.
8. Conduits to be installed in this contract but are reserved for future SMD.
9. For service platform grounding use #4/0 AWG bare copper ground cable, tapped from ground bar, see sheet E-64 for continuation.
10. For tray installation, see E-86 detail 1 and E-64.
11. For roadway deck access opening, see structures sheets. Access cover engraving "ELECTRICAL" and "TOS/COM".
12. Install cable pull irons in all vaults, cast in each endwall.
13. Install 41 mm (F) conduit from 600 V Vault IW to Poles 1022-1 and 1002-1. Required for future camera #14 and #13 (By others).
14. PB-F same as PB-COM, label to be determined by the Engineer.

NOTES:

1. References: 7
   - 103 mm conduits shall have a minimum bending radius of 610 mm.
   - For conduit support location, refer to sheets E-87 through E-89 and AS drawings for conduit support details.
2. For overall grounding system. Refer to sheet E-34.
3. For conduit support, see sheet E-87.
4. For overall plan of this area, see sheet E-74.

7 **REVISED PER ADDENDUM No. 7 DATED OCTOBER 19, 2009**

5 **REVISED PER ADDENDUM No. 5 DATED JULY 30, 2009**

DETAILS
YBI TRANSITION STRUCTURES GIRDER WESTBOUND
(VAULT SECTIONS AND DETAILS)
SCALE AS NOTED

E-81

THIS PLAN ACCURATE FOR ELECTRICAL WORK ONLY.

ALL DIMENSIONS ARE IN MILLIMETERS UNLESS OTHERWISE SHOWN

REVISED BY	DATE REVISED
FK	AB

CALCULATED-DESIGNED BY / CHECKED BY

CONSULTANT FUNCTIONAL SUPERVISOR: BEHZAD GOLEMOHAMMADI

STATE OF CALIFORNIA - DEPARTMENT OF TRANSPORTATION
Caltrans

LAST REVISION 00-00-00 | DATE PLOTTED => 15-OCT-2009 | TIME PLOTTED => 10:47

Dist	COUNTY	ROUTE	KILOMETER POST TOTAL PROJECT	SHEET No.	TOTAL SHEETS
04	SF	80	12.7/13.2	204	806

REGISTERED ELECTRICAL ENGINEER 2/14/08

6-23-08
PLANS APPROVAL DATE

REGISTERED PROFESSIONAL ENGINEER FADI WALIEDDINE No. 11465 Exp. 12/31/09 ELECTRICAL STATE OF CALIFORNIA

THE STATE OF CALIFORNIA OR ITS OFFICERS OR AGENTS SHALL NOT BE RESPONSIBLE FOR THE ACCURACY OR COMPLETENESS OF ELECTRONIC COPIES OF THIS PLAN SHEET.

PB AMERICAS, Inc.
A Parsons Brinckerhoff Company
303 Second St., Suite 700N
San Francisco, CA 94107-1317

7

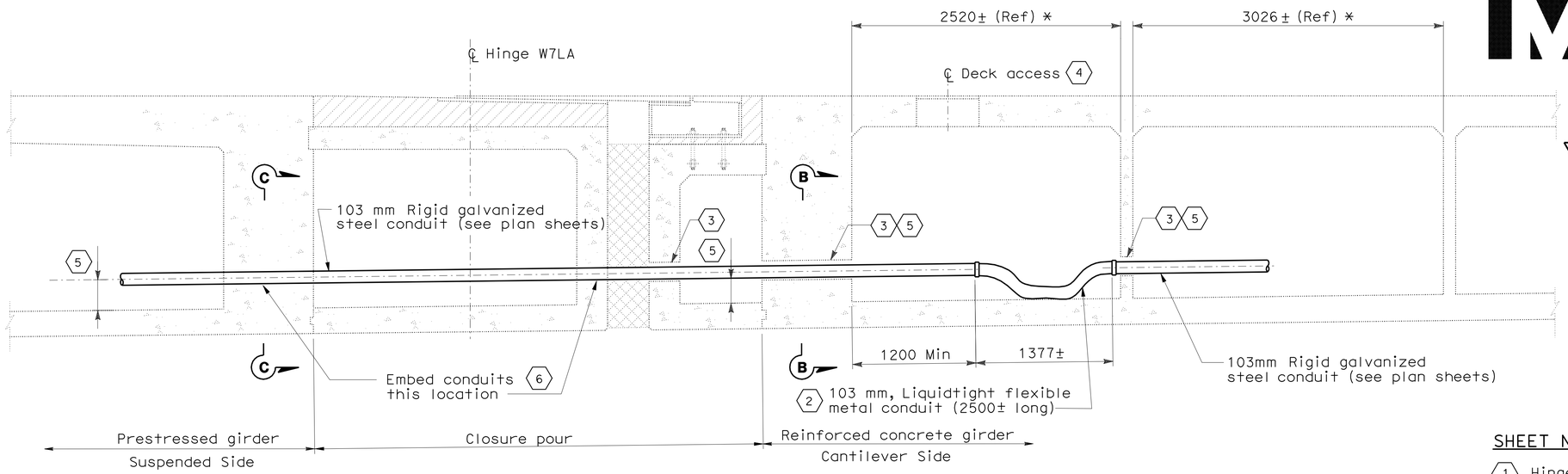

SECTION A-A 1

SCALE: 1:25

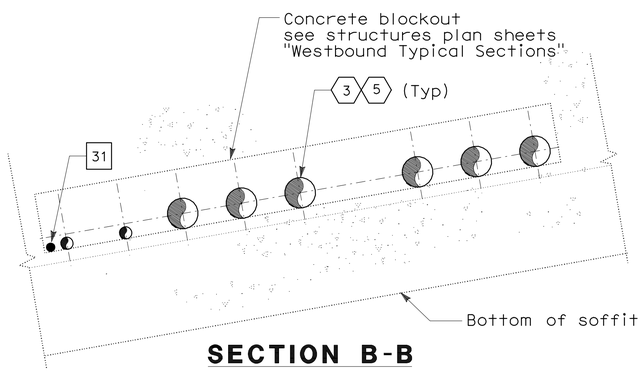

SECTION B-B

NO SCALE

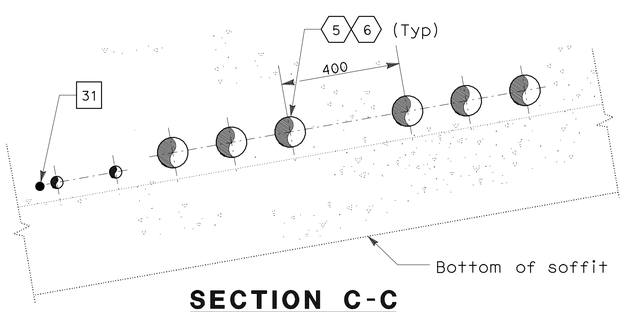

SECTION C-C

NO SCALE

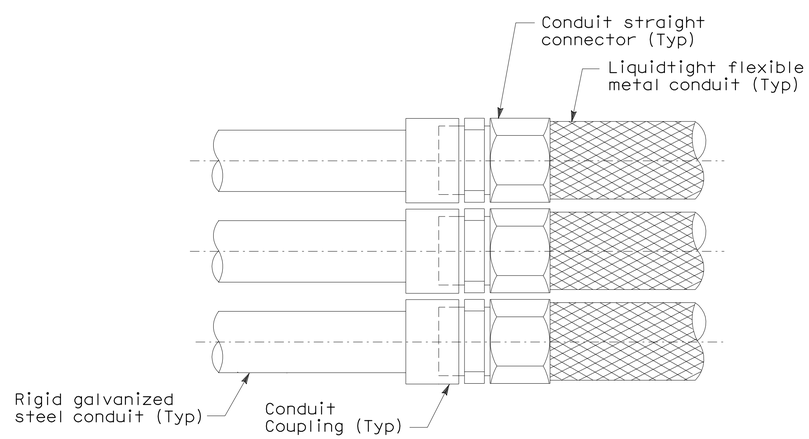

DETAIL 1

NO SCALE

SHEET NOTES:

1. Hinge W7LA electrical design is based on the maximum expansion joint movement opening of 1040 mm.
2. Provide slack to liquidtight flexible metal conduits for seismic displacement of hinge. Provide conduit system separation, distance similar to Section C-C.
3. For location of concrete blockout, refer to girder diaphragm details of Structures sheets.
4. Deck access opening required for installation and inspection of conduits and cables.
5. The Contractor to ensure the embedded conduits and concrete blockout are aligned.
6. The Contractor to embed rigid steel conduits to anchor conduits during hinge expansion movement.

NOTES:

1. Refer to structural drawing for expansion joint displacement location and dimension indicated with asterisk (*).

DETAILS
YBI TRANSITION STRUCTURES GIRDER WESTBOUND (HINGE W7LA)

SCALE AS NOTED

7 REVISED PER ADDENDUM No. 7 DATED OCTOBER 19, 2009

E-85

THIS PLAN ACCURATE FOR ELECTRICAL WORK ONLY.

ALL DIMENSIONS IN MILLIMETERS UNLESS OTHERWISE SHOWN

STATE OF CALIFORNIA - DEPARTMENT OF TRANSPORTATION
Caltrans

CONSULTANT FUNCTIONAL SUPERVISOR: BEHZAD GOLEMOHAMMADI
CALCULATED-DESIGNED BY: FK
CHECKED BY: AB
REVISED BY / DATE REVISED

LAST REVISION 00-00-00 DATE PLOTTED => 15-OCT-2009 TIME PLOTTED => 10:47

Dist	COUNTY	ROUTE	KILOMETER POST TOTAL PROJECT	SHEET No.	TOTAL SHEETS
04	SF	80	12.7/13.2	205	806

REGISTERED ELECTRICAL ENGINEER — 2/14/08 DATE

6-23-08
PLANS APPROVAL DATE

REGISTERED PROFESSIONAL ENGINEER — FADI WALIEDDINE No. 11465 Exp. 12/31/09 ELECTRICAL — STATE OF CALIFORNIA

THE STATE OF CALIFORNIA OR ITS OFFICERS OR AGENTS SHALL NOT BE RESPONSIBLE FOR THE ACCURACY OR COMPLETENESS OF ELECTRONIC COPIES OF THIS PLAN SHEET.

PB AMERICAS, Inc.
A Parsons Brinckerhoff Company
303 Second St., Suite 700N
San Francisco, CA 94107-1317

7

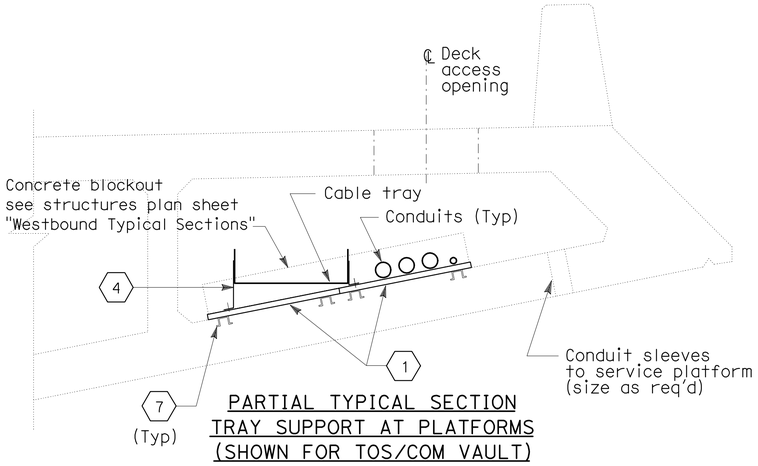

PARTIAL TYPICAL SECTION TRAY SUPPORT AT PLATFORMS (SHOWN FOR TOS/COM VAULT)

DETAIL 1 3
NO SCALE

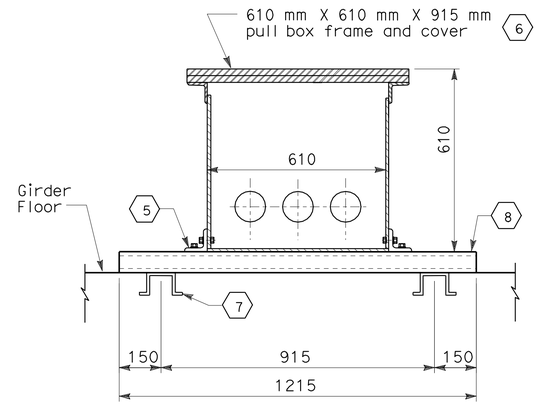

DETAIL 2
NO SCALE

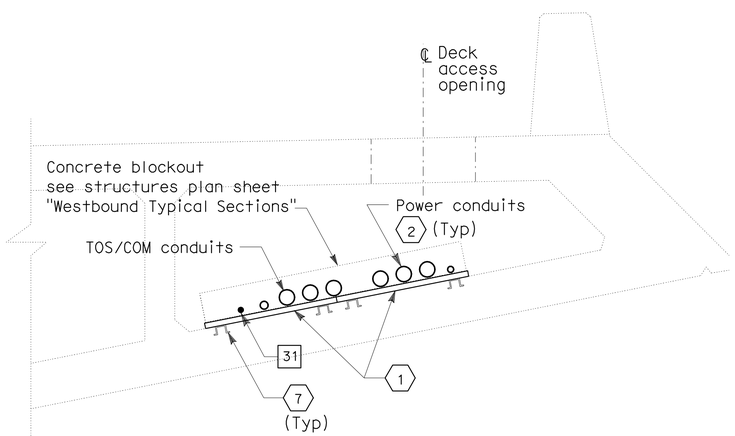

PARTIAL TYPICAL SECTION - CONDUIT SUPPORT

DETAIL 3
NO SCALE

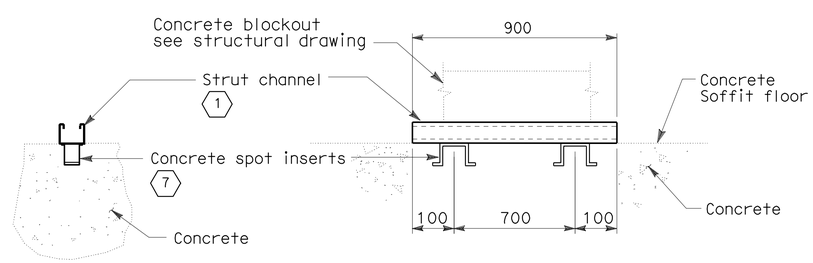

EMBEDDED CONCRETE SPOT INSERTS AND STRUT CHANNEL
NO SCALE

SHEET NOTES:

1. Galvanized strut channel, 41 mm channel length shall be approximately 900 mm or as required to support conduits and trays.
2. Use stainless steel conduit clamps/strap for clamping conduits to strut channel.
3. DETAIL 1 is shown for TOS/COM vault. For the 600 V cable tray and conduit locations, see plan sheets.
4. Use raised support plate for leveling trays where required.
5. Use stainless steel fittings for attaching pull box to strut channel.
6. PB-2A and PB-2E.
7. Install two concrete spot inserts for each strut channel.
8. Install Unistrut channel to support PB-2A and PB-2E

NOTES:

1. Refer to structural drawings for location of utility openings.
2. For pull box schedule, see sheet E-69

DETAILS
YBI TRANSITON STRUCTURES GIRDER WESTBOUND (CONDUIT SUPPORT AND EMBEDDED CONCRETE INSERT CHANNEL)
SCALE AS NOTED

7 **REVISED PER ADDENDUM No. 7 DATED OCTOBER 19, 2009**

THIS PLAN ACCURATE FOR ELECTRICAL WORK ONLY.

ALL DIMENSIONS ARE IN MILLIMETERS UNLESS OTHERWISE SHOWN

E-86

STATE OF CALIFORNIA - DEPARTMENT OF TRANSPORTATION
Caltrans
CONSULTANT FUNCTIONAL SUPERVISOR: BEHZAD GOLEMOHAMMADI
CALCULATED-DESIGNED BY: FK
CHECKED BY: AB
REVISED BY
DATE REVISED

LAST REVISION 00-00-00 | DATE PLOTTED => 15-OCT-2009 | TIME PLOTTED => 10:48

Dist	COUNTY	ROUTE	KILOMETER POST TOTAL PROJECT	SHEET No.	TOTAL SHEETS
04	SF	80	12.7/13.2	212	806

REGISTERED ELECTRICAL ENGINEER 2/14/08

6-23-08
PLANS APPROVAL DATE

REGISTERED PROFESSIONAL ENGINEER FADI WALIEDDINE No. 11465 Exp. 12/31/09 ELECTRICAL STATE OF CALIFORNIA

THE STATE OF CALIFORNIA OR ITS OFFICERS OR AGENTS SHALL NOT BE RESPONSIBLE FOR THE ACCURACY OR COMPLETENESS OF ELECTRONIC COPIES OF THIS PLAN SHEET.

PB AMERICAS, Inc.
A Parsons Brinckerhoff Company
303 Second St., Suite 700N
San Francisco, CA 94107-1317

Caltrans Metric

SHEET NOTES:

1. For call box locations and schedule , see sheets E-168 & E-172.
2. For routing of conduit in girder and crossing of roadway, see sheet E-120.
3. For conduit routing inside barriers and pole bases, see sheets E-98 thru E-100.
4. For 480 V roadway lighting wiring diagrams, see sheets E-94 and E-95.
5. For 120 V bike path lighting wiring diagrams, see sheets E-96 and E-97.
6. For railing post location, refer to YBI EB on-ramp structures Sheets.
7. For typical bike path lighting location, refer to YBI EB on-ramp structures sheets.
8. For typical bike path lighting and railing see sheets E-102 & E-103.
9. Conduits to be installed in this contract but are reserved for future SMD.
10. Stub-out conduits for future bike path lighting, light pipe and call box. Coil 2 m for circuit leads in PB-LTG and PB-COM.
11. Install 41C RGS conduit from PB-LTG to PB-1C for circuit LP218-2,4,6. See sheet E-103, Detail 2.
12. Install 27C RGS conduit in bike path support beams from all PB-LTG boxes for future light pipe, see sheet E-120.
13. Conduit shall stub-out at the non-roadway side of the barrier with the coupler flushed to the barrier face wall and provide with a plug.

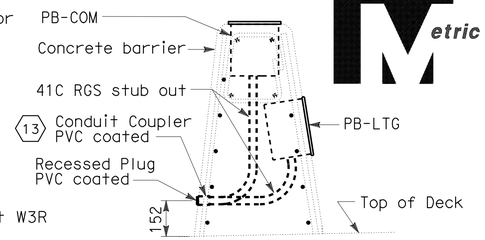

DETAIL 1
NO SCALE

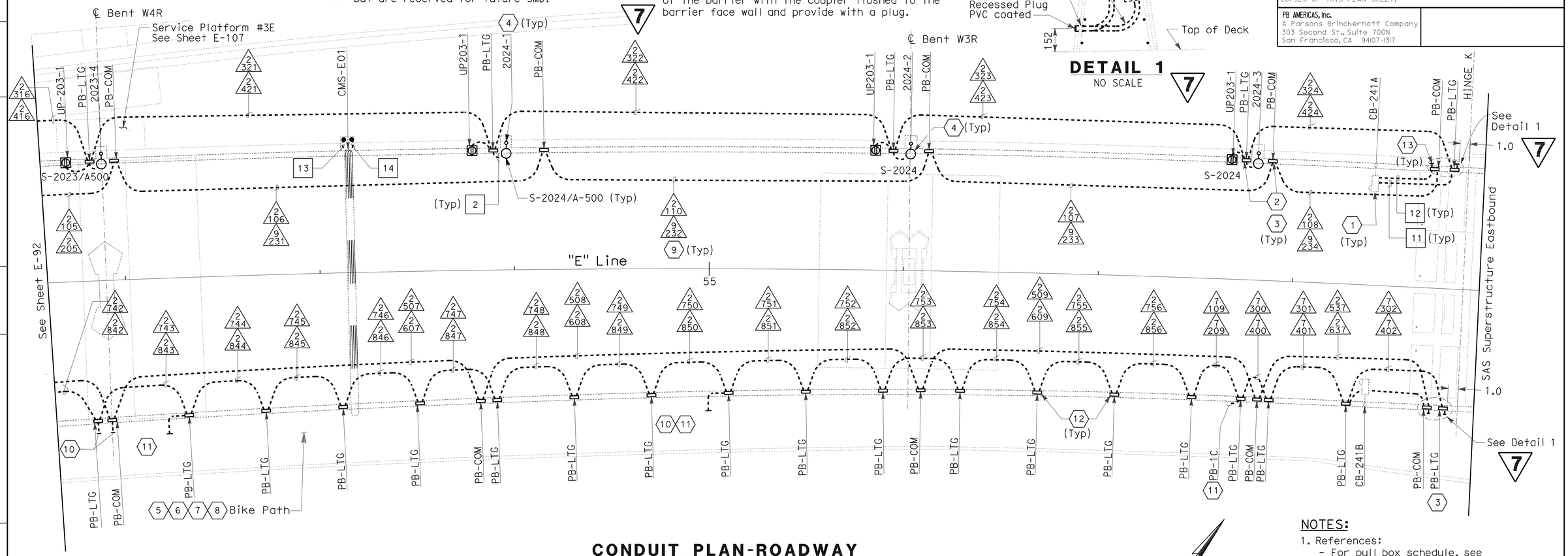

CONDUIT PLAN-ROADWAY

NOTES:

1. References:
   - For pull box schedule, see sheet E-109.
   - For call box wiring diagram see sheet E-171.
2. For requirements of roadway lighting pole assembly, see Special Provisions.

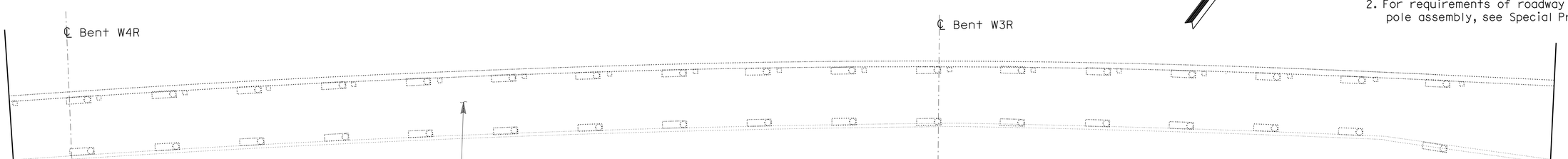

CONDUIT PLAN-BIKE PATH

YBI TRANSITION STRUCTURES ROADWAY EASTBOUND (LIGHTING AND ELECTRICAL SYSTEMS)

SCALE: 1:200

E-93

7 **REVISED PER ADDENDUM No. 7 DATED OCTOBER 19, 2009**

THIS PLAN ACCURATE FOR ELECTRICAL WORK ONLY.

ALL DIMENSIONS ARE IN METERS UNLESS OTHERWISE SHOWN

REVISED BY	DATE REVISED
FK	AB

CALCULATED-DESIGNED BY / CHECKED BY

CONSULTANT FUNCTIONAL SUPERVISOR: BEHZAD GOLEMOHAMMADI

STATE OF CALIFORNIA - DEPARTMENT OF TRANSPORTATION

Caltrans

LAST REVISION 00-00-00 | DATE PLOTTED => 15-OCT-2009 | TIME PLOTTED => 12:26

Dist	COUNTY	ROUTE	KILOMETER POST TOTAL PROJECT	SHEET No.	TOTAL SHEETS
04	SF	80	12.7/13.2	221	806

REGISTERED ELECTRICAL ENGINEER — 2/14/08 DATE

6-23-08
PLANS APPROVAL DATE

REGISTERED PROFESSIONAL ENGINEER FADI WALIEDDINE No. 11465 Exp. 12/31/09 ELECTRICAL STATE OF CALIFORNIA

THE STATE OF CALIFORNIA OR ITS OFFICERS OR AGENTS SHALL NOT BE RESPONSIBLE FOR THE ACCURACY OR COMPLETENESS OF ELECTRONIC COPIES OF THIS PLAN SHEET.

7

PB AMERICAS, Inc.
A Parsons Brinckerhoff Company
303 Second St., Suite 700N
San Francisco, CA 94107-1317

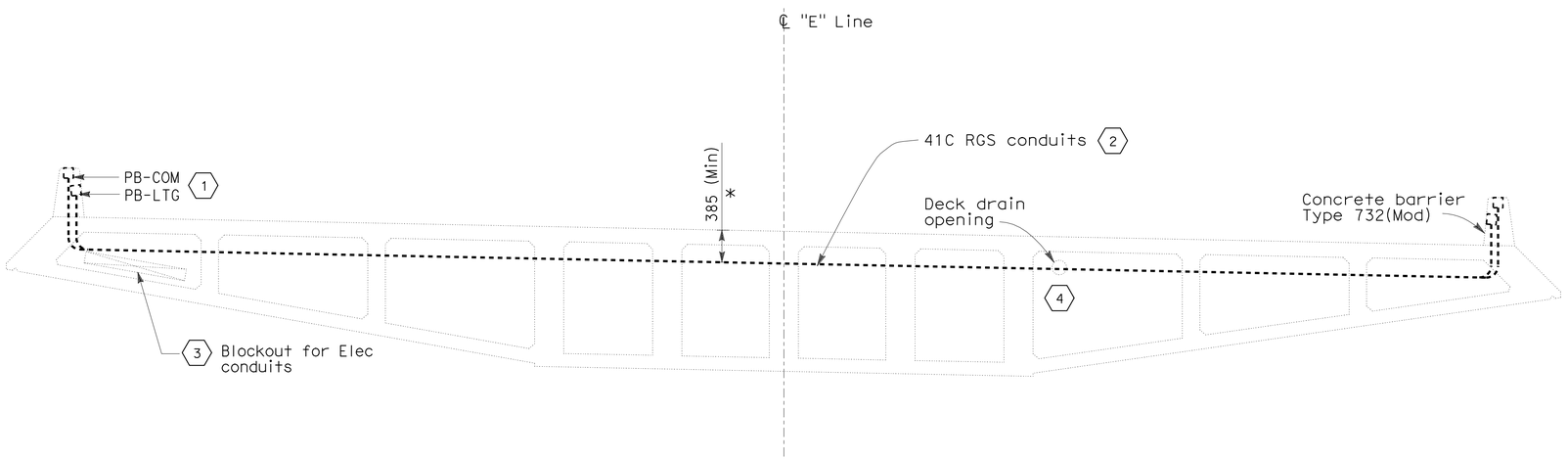

TYPICAL SECTION - BENT W8R TO HINGE W6RB

SCALE 1:50

SHEET NOTES:

1. For location OF PB-LTG and PB-COM, see sheet E-90 thru E-93.
2. For embedded conduit layout, see sheets E-117 thru E-120.
3. For conduit layout in girder level, see sheets E-117 thru E-120.
4. For opening in draphragm for conduits, see YBI structural drawings and standard details U-5, B7-10.

NOTES:

1. (*) Dimension to be provided by structural.

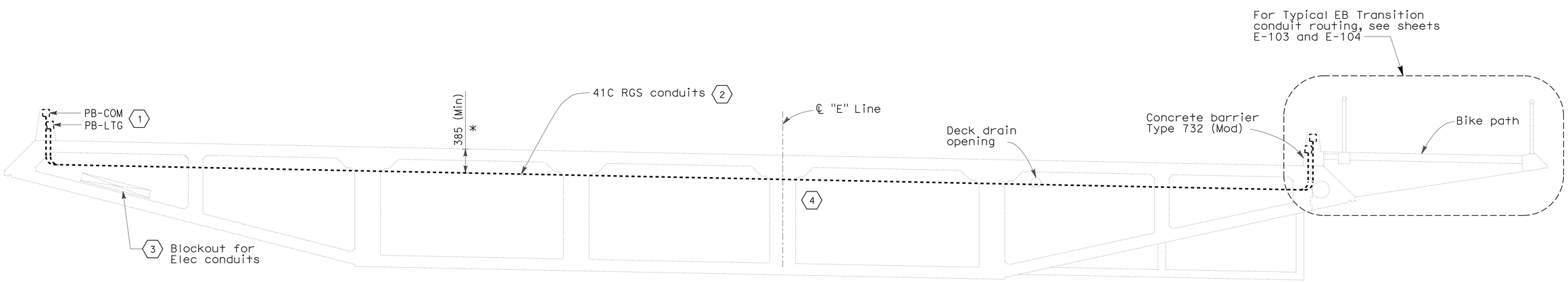

TYPICAL SECTION - BENT W6R TO HINGE W5RB

SCALE 1:50

7 REVISED PER ADDENDUM No. 7 DATED OCTOBER 19, 2009

DETAILS
YBI TRANSITION STRUCTURES ROADWAY EASTBOUND (YBI STRUCTURE SECTIONS)

SCALE AS NOTED

THIS PLAN ACCURATE FOR ELECTRICAL WORK ONLY.

ALL DIMENSIONS ARE IN MILLIMETERS UNLESS OTHERWISE SHOWN

E-102

STATE OF CALIFORNIA - DEPARTMENT OF TRANSPORTATION
Caltrans

CONSULTANT FUNCTIONAL SUPERVISOR: BEHZAD GOLEMOHAMMADI
CALCULATED-DESIGNED BY: FK
CHECKED BY: AB
REVISED BY / DATE REVISED

LAST REVISION 00-00-00 | DATE PLOTTED => 15-OCT-2009 | TIME PLOTTED => 10:48

Dist	COUNTY	ROUTE	KILOMETER POST TOTAL PROJECT	SHEET No.	TOTAL SHEETS
04	SF	80	12.7/13.2	243	806

REGISTERED ELECTRICAL ENGINEER 2/14/08 DATE

6-23-08
PLANS APPROVAL DATE

REGISTERED PROFESSIONAL ENGINEER FADI WALIEDDINE No. 11465 Exp. 12/31/09 ELECTRICAL STATE OF CALIFORNIA

THE STATE OF CALIFORNIA OR ITS OFFICERS OR AGENTS SHALL NOT BE RESPONSIBLE FOR THE ACCURACY OR COMPLETENESS OF ELECTRONIC COPIES OF THIS PLAN SHEET.

PB AMERICAS, Inc.
A Parsons Brinckerhoff Company
303 Second St., Suite 700N
San Francisco, CA 94107-1317

7

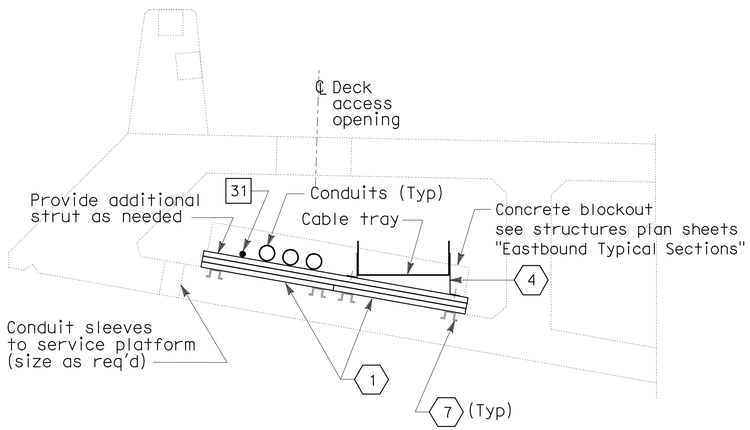

PARTIAL TYPICAL SECTION
TRAY SUPPORT AT PLATFORMS
(SHOWN FOR TOS/COM VAULT)

DETAIL 1 3
NO SCALE

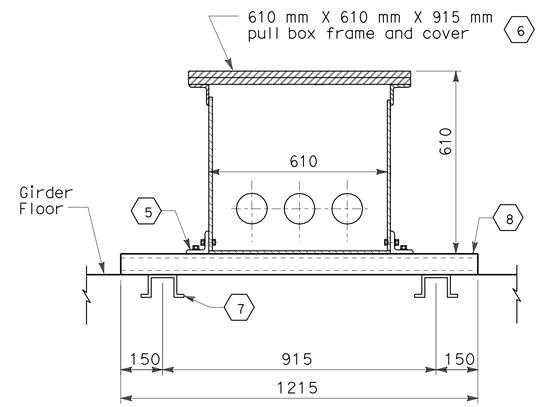

DETAIL 2
NO SCALE

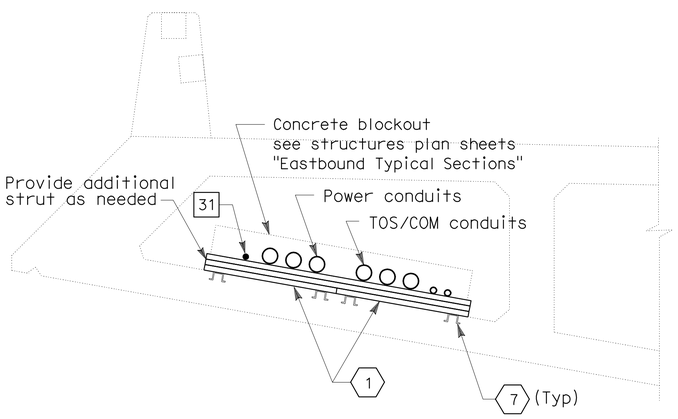

PARTIAL TYPICAL SECTION -
CONDUIT SUPPORT

DETAIL 3
NO SCALE

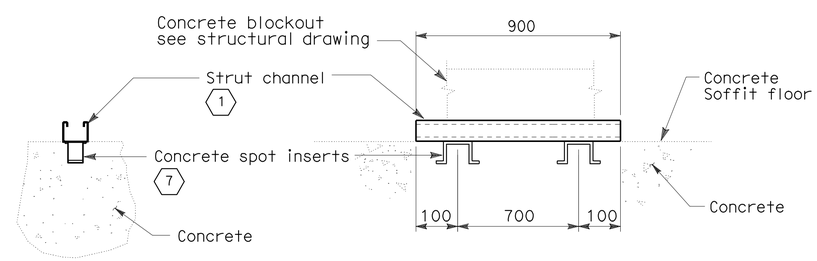

EMBEDDED CONCRETE SPOT INSERTS AND STRUT CHANNEL
NO SCALE

SHEET NOTES:

1. Galvanized strut channel, 41 mm channel length shall be approximately 900 mm or as required to support conduits and trays.
2. Use stainless steel conduit clamps/strap for clamping conduits to strut channel.
3. Detail 1 is shown for TOS/COM vault for the 600 V cable tray and conduit locations, see plan sheets.
4. Use raised support plate for leveling trays where required.
5. Use stainless steel fittings for attaching pull box to strut channel.
6. PB-2A and PB-2E.
7. Install two concrete spot inserts for each strut channel.
8. Install strut channel to support PB-2A and PB-2E.

NOTES:

1. Refer to structural drawings for location of utility openings.
2. For pull box schedule, see sheet E-109.

DETAILS
YBI TRANSITION STRUCTURES GIRDER EASTBOUND (TYPICAL INSTALLATION AND SECTIONS)
SCALE AS NOTED

7 REVISED PER ADDENDUM No. 7 DATED OCTOBER 19, 2009

THIS PLAN ACCURATE FOR ELECTRICAL WORK ONLY.

ALL DIMENSIONS ARE IN MILLIMETERS UNLESS OTHERWISE SHOWN

E-124

STATE OF CALIFORNIA - DEPARTMENT OF TRANSPORTATION
Caltrans

CONSULTANT FUNCTIONAL SUPERVISOR: BEHZAD GOLEMOHAMMADI
CALCULATED-DESIGNED BY: FK
CHECKED BY: AB
REVISED BY / DATE REVISED

LAST REVISION 00-00-00 | DATE PLOTTED => 15-OCT-2009 | TIME PLOTTED => 10:48

Dist	COUNTY	ROUTE	KILOMETER POST TOTAL PROJECT	SHEET No.	TOTAL SHEETS
04	SF	80	12.7/13.2	245	806

REGISTERED ELECTRICAL ENGINEER 2/14/08

6-23-08
PLANS APPROVAL DATE

REGISTERED PROFESSIONAL ENGINEER FADI WALIEDDINE No. 11465 Exp. 12/31/09 ELECTRICAL STATE OF CALIFORNIA

THE STATE OF CALIFORNIA OR ITS OFFICERS OR AGENTS SHALL NOT BE RESPONSIBLE FOR THE ACCURACY OR COMPLETENESS OF ELECTRONIC COPIES OF THIS PLAN SHEET.

PB AMERICAS, Inc.
A Parsons Brinckerhoff Company
303 Second St., Suite 700N
San Francisco, CA 94107-1317

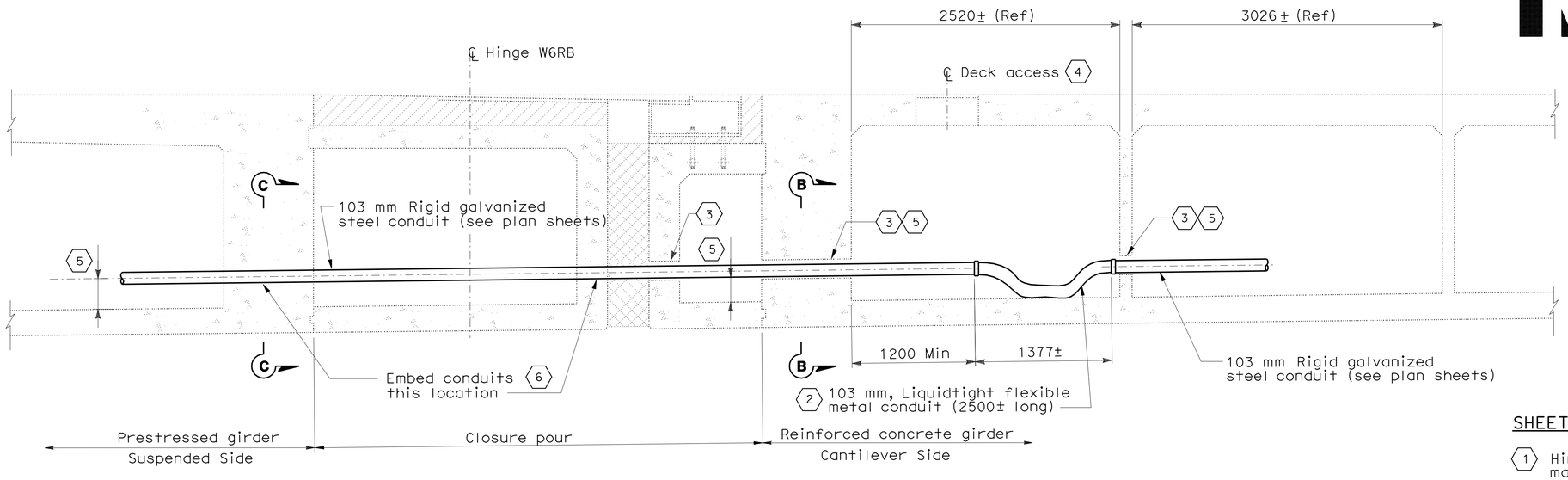

SECTION A-A 1
SCALE: 1:25

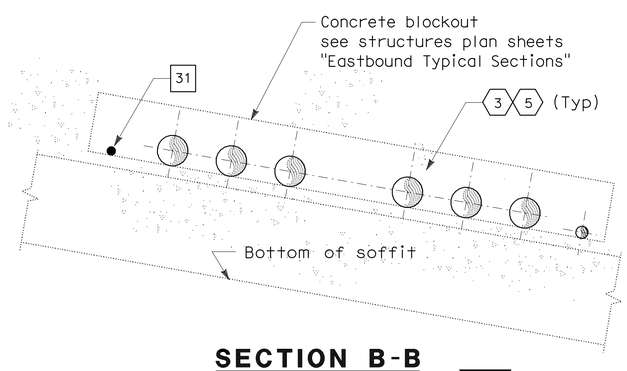

SECTION B-B
NO SCALE 7

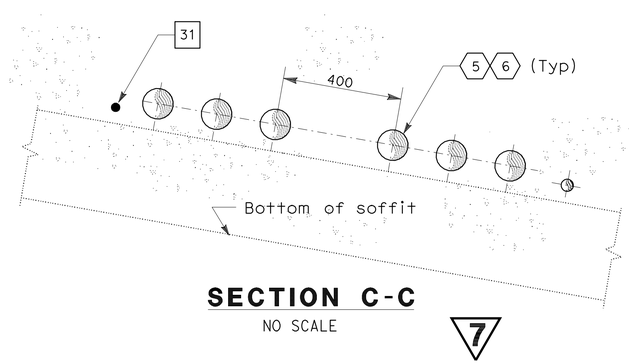

SECTION C-C
NO SCALE 7

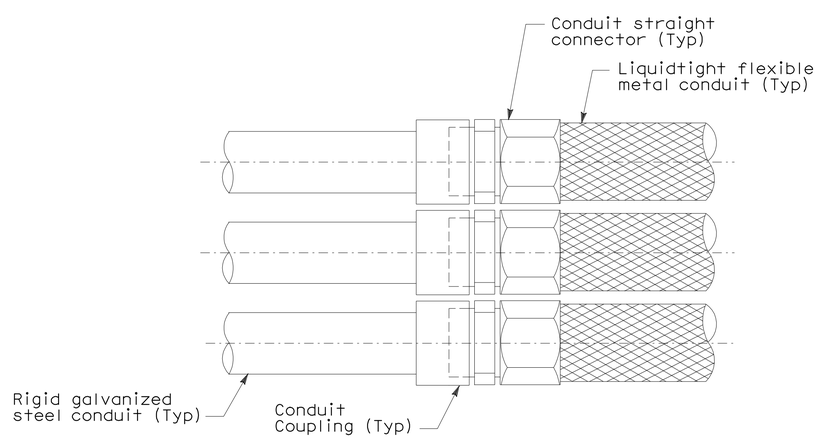

DETAIL 1
NO SCALE

SHEET NOTES: 7

1. Hinge W6RB electrical design is based on the maximum expansion joint movement opening of 1040 mm.
2. Provide slack to liquidtight flexible metal conduits for seismic displacement of hinge. Provide conduit system separation, distance similar to Section C-C.
3. For location of concrete blockout, refer to girder diaphragm details of Structures sheets.
4. Deck access opening required for installation and inspection of conduits and cables.
5. The Contractor to ensure the embedded conduits and concrete blockout are aligned.
6. The Contractor to embed rigid steel conduits to anchor conduits during hinge expansion movement.

NOTES:

1. Refer to structural drawing for expansion joint displacement location and dimension indicated with asterisk (*).

7 REVISED PER ADDENDUM No. 7 DATED OCTOBER 19, 2009

DETAILS
YBI TRANSITION STRUCTURES GIRDER EASTBOUND (HINGE W6RB)
SCALE AS NOTED

E-126

THIS PLAN ACCURATE FOR ELECTRICAL WORK ONLY.

ALL DIMENSIONS ARE IN MILLIMETERS UNLESS OTHERWISE SHOWN

STATE OF CALIFORNIA - DEPARTMENT OF TRANSPORTATION
Caltrans

CONSULTANT FUNCTIONAL SUPERVISOR: BEHZAD GOLEMOHAMMADI
CALCULATED-DESIGNED BY: FK
CHECKED BY: AB
REVISED BY / DATE REVISED

LAST REVISION 00-00-00
DATE PLOTTED => 15-OCT-2009
TIME PLOTTED => 10:49

Dist	COUNTY	ROUTE	KILOMETER POST TOTAL PROJECT	SHEET No.	TOTAL SHEETS
04	SF	80	12.7/13.2	246	806

REGISTERED ELECTRICAL ENGINEER 2/14/08

6-23-08
PLANS APPROVAL DATE

REGISTERED PROFESSIONAL ENGINEER FADI WALIEDDINE No. 11465 Exp. 12/31/09 ELECTRICAL STATE OF CALIFORNIA

THE STATE OF CALIFORNIA OR ITS OFFICERS OR AGENTS SHALL NOT BE RESPONSIBLE FOR THE ACCURACY OR COMPLETENESS OF ELECTRONIC COPIES OF THIS PLAN SHEET.

PB AMERICAS, Inc.
A Parsons Brinckerhoff Company
303 Second St., Suite 700N
San Francisco, CA 94107-1317

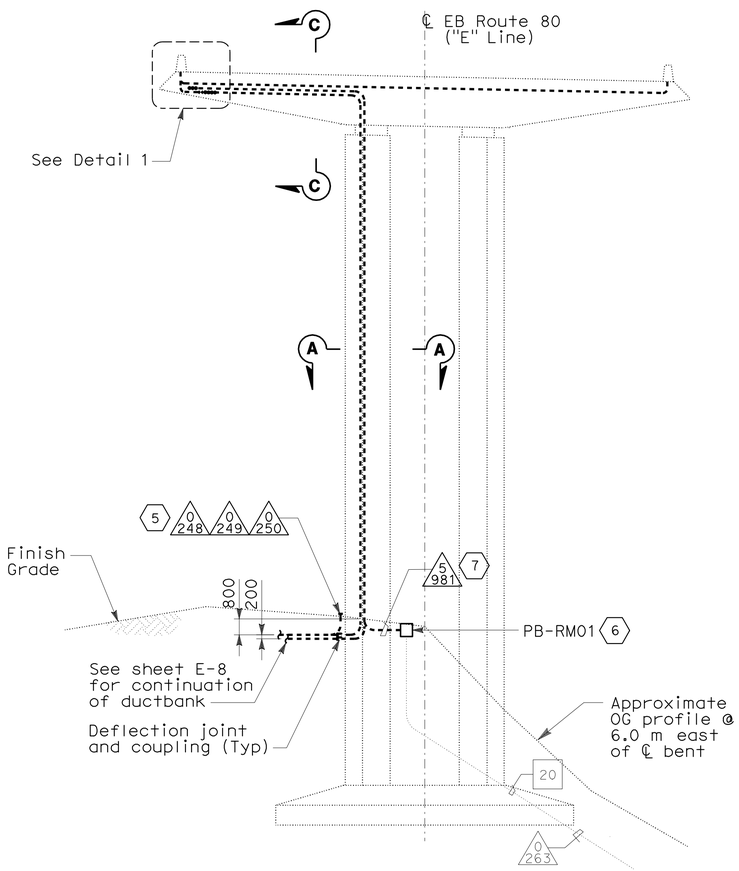

BENT W8R ELEVATION
SCALE: 1:150

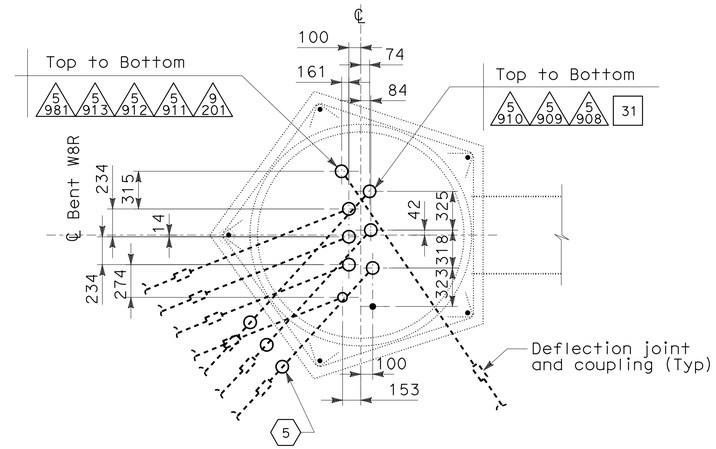

SECTION A-A
NO SCALE

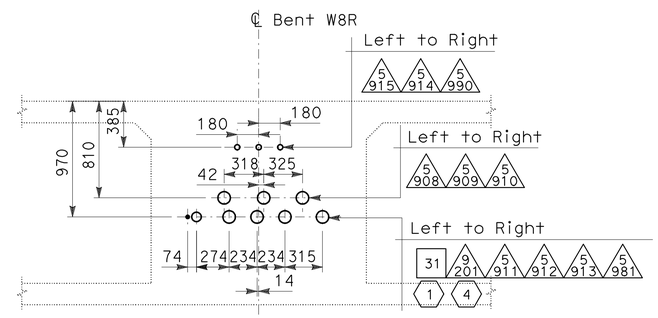

SECTION C-C
NO SCALE

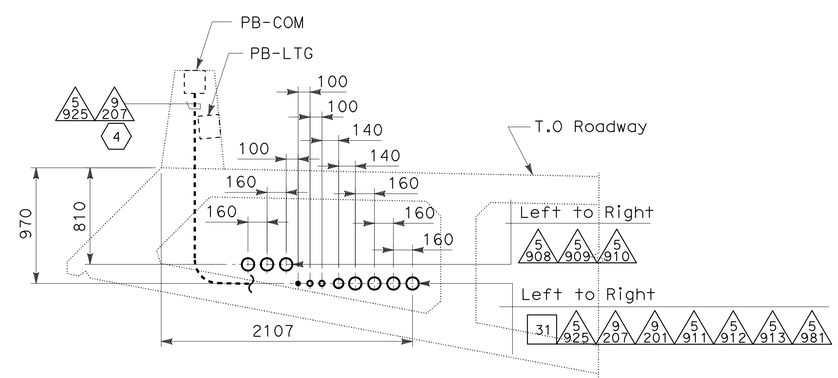

DETAIL 1
NO SCALE

NOTES:

1. References:
   - For Transition Structure EB Roadway Plans, see sheet E-91.
   - For Transition Structure EB Girder Plans, see sheet E-118.
   - (*) Dimension to be provided by structural drawings.

SHEET NOTES:

1. Ground conductor for 250 kcmil bare copper wire. Routed inside underground duct banks in column Bent W8, connected and tapped from ground bar for service platform grounding system. Refer to sheets E-36 and E-128.
2. For typical conduit support, see sheets E-124.
3. The embedded conduits may be ajusted to avoid interference with rebars.
4. Conduits reserved for SMD use only.
5. Stup out and cap conduits 0-248, 0-249 and 0-250.
6. Install PB-RM01 flush to finish grade.
7. Minimum bending radius to be installed in the conduit shall be 20 times the outside diameter of the fiber optic cable. Approximate cable diameter = O.D.=20.07

DETAILS
YBI TRANSITION STRUCTURES GIRDER EASTBOUND (BENT W8R ELEVATION AND SECTIONS)
SCALE AS NOTED

7 REVISED PER ADDENDUM No. 7 DATED OCTOBER 19, 2009

THIS PLAN ACCURATE FOR ELECTRICAL WORK ONLY.

ALL DIMENSIONS ARE IN MILLIMETERS UNLESS OTHERWISE SHOWN

E-127

STATE OF CALIFORNIA - DEPARTMENT OF TRANSPORTATION
Caltrans

CONSULTANT FUNCTIONAL SUPERVISOR: BEHZAD GOLEMOHAMMADI
CALCULATED-DESIGNED BY: FK
CHECKED BY: AB
REVISED BY
DATE REVISED

LAST REVISION 00-00-00
DATE PLOTTED => 15-OCT-2009
TIME PLOTTED => 10:49

Dist	COUNTY	ROUTE	KILOMETER POST TOTAL PROJECT	SHEET No.	TOTAL SHEETS
04	SF	80	12.7/13.2	249	806

Caltrans Metric

REGISTERED ELECTRICAL ENGINEER 2/14/08

6-23-08
PLANS APPROVAL DATE

REGISTERED PROFESSIONAL ENGINEER FADI WALIEDDINE No. 11465 Exp. 12/31/09 ELECTRICAL STATE OF CALIFORNIA

THE STATE OF CALIFORNIA OR ITS OFFICERS OR AGENTS SHALL NOT BE RESPONSIBLE FOR THE ACCURACY OR COMPLETENESS OF ELECTRONIC COPIES OF THIS PLAN SHEET.

PB AMERICAS, Inc.
A Parsons Brinckerhoff Company
303 Second St., Suite 700N
San Francisco, CA 94107-1317

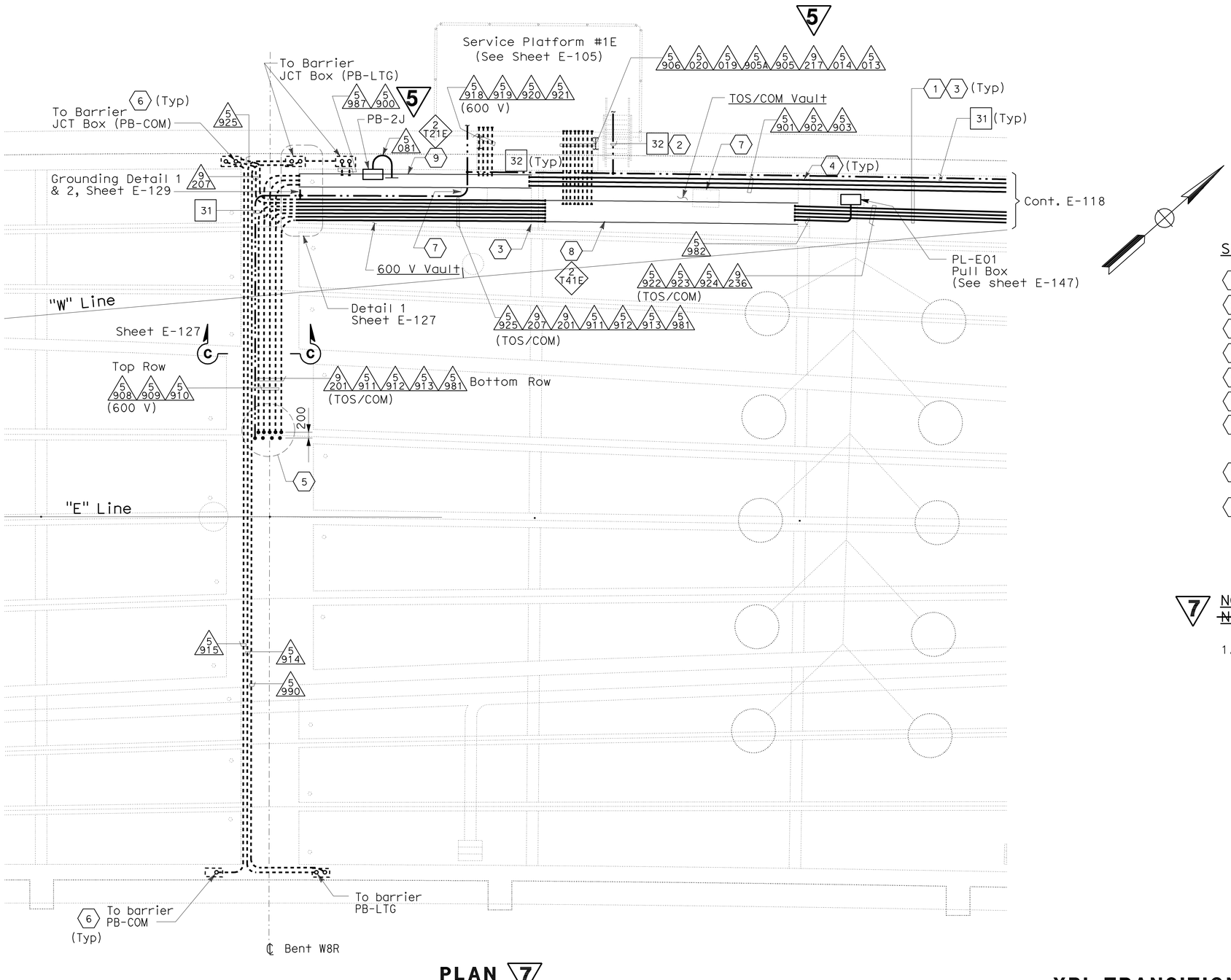

SHEET NOTES:

1. For conduit routing in girder see sheet E-118.
2. For Typical Grounding Installation, see sheet E-129.
3. For conduit support, see sheet E-124.
4. Opening for conduits, refer to Structures sheets.
5. For embedded conduits in column, see sheet E-127.
6. For conduit up to PB-LTG & PB-COM, see sheet E-91.
7. Roadway deck access (vault) opening required. See structures sheets. Access cover engraving "ELECTRICAL" and "TOS/COM".
8. Install 610 mm solid bottom tray with cover for routing TOS/COM cables, see E-124, Detail 1.
9. Install 610 mm ladder type tray for routing 600 V rated cable, see E-124, Detail 1.

7 NOTE:
~~NOTES:~~

1. References:
   - For embedded conduit layout, see sheets E-121 thru E-123.

PLAN 7

7 REVISED PER ADDENDUM No. 7 DATED OCTOBER 19, 2009

5 REVISED PER ADDENDUM No. 5 DATED JULY 30, 2009

DETAILS
YBI TRANSITION STRUCTURES GIRDER EASTBOUND (VAULT SECTIONS AND DETAILS)
SCALE: 1:75

E-130

THIS PLAN ACCURATE FOR ELECTRICAL WORK ONLY.

ALL DIMENSIONS ARE IN MILLIMETERS UNLESS OTHERWISE SHOWN

REVISED BY	DATE REVISED
FK	AB

CALCULATED-DESIGNED BY / CHECKED BY

CONSULTANT FUNCTIONAL SUPERVISOR: BEHZAD GOLEMOHAMMADI

STATE OF CALIFORNIA - DEPARTMENT OF TRANSPORTATION

Caltrans

LAST REVISION 00-00-00 | DATE PLOTTED => 15-OCT-2009 | TIME PLOTTED => 13:06

Dist	COUNTY	ROUTE	KILOMETER POST TOTAL PROJECT	SHEET No.	TOTAL SHEETS
04	SF	80	12.7/13.2	252	806

2/14/08
REGISTERED ELECTRICAL ENGINEER

6-23-08
PLANS APPROVAL DATE

REGISTERED PROFESSIONAL ENGINEER
FADI WALIEDDINE
No. 11465
Exp. 12/31/09
ELECTRICAL
STATE OF CALIFORNIA

THE STATE OF CALIFORNIA OR ITS OFFICERS OR AGENTS SHALL NOT BE RESPONSIBLE FOR THE ACCURACY OR COMPLETENESS OF ELECTRONIC COPIES OF THIS PLAN SHEET.

PB AMERICAS, Inc.
A Parsons Brinckerhoff Company
303 Second St., Suite 700N
San Francisco, CA 94107-1317

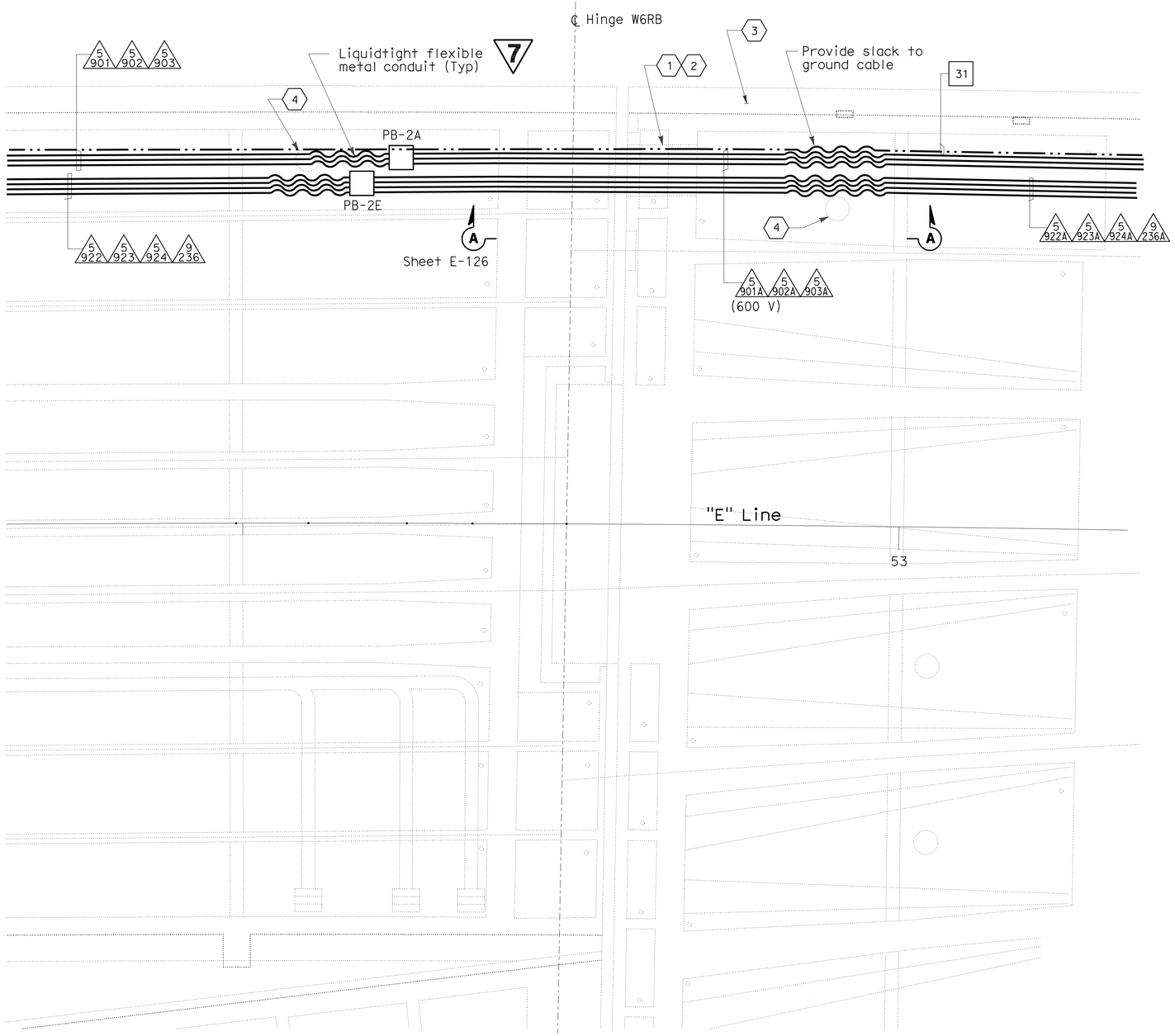

SHEET NOTES:

1. Opening for conduits, refer to YBI Transition Structure Drawings. Girder Diaphragm Detail 1.
2. For Hinge W6RB Details see sheet E-126.
3. For conduit routing in barrier, see sheets E-90 thru E-93.
4. Roadway deck access opening required. See Structures sheets. Access cover engraving "ELECTRICAL".

DETAILS
YBI TRANSITION STRUCTURES GIRDER EASTBOUND (VAULT SECTIONS AND DETAILS)

SCALE: 1:75

7 **REVISED PER ADDENDUM No. 7 DATED OCTOBER 19, 2009**

THIS PLAN ACCURATE FOR ELECTRICAL WORK ONLY.

ALL DIMENSIONS ARE IN MILLIMETERS UNLESS OTHERWISE SHOWN

E-133

REVISED BY	DATE REVISED
FK	AB

CALCULATED-DESIGNED BY
CHECKED BY

CONSULTANT FUNCTIONAL SUPERVISOR
BEHZAD GOLEMOHAMMADI

STATE OF CALIFORNIA - DEPARTMENT OF TRANSPORTATION
Caltrans

LAST REVISION 00-00-00
DATE PLOTTED => 15-OCT-2009
TIME PLOTTED => 13:07

Dist	COUNTY	ROUTE	KILOMETER POST TOTAL PROJECT	SHEET No.	TOTAL SHEETS
04	SF	80	12.7/13.2	365	806

Caltrans Metric

2/14/08
REGISTERED ELECTRICAL ENGINEER

6-23-08
PLANS APPROVAL DATE

REGISTERED PROFESSIONAL ENGINEER
FADI WALIEDDINE
No. 11465
Exp. 12/31/09
ELECTRICAL
STATE OF CALIFORNIA

THE STATE OF CALIFORNIA OR ITS OFFICERS OR AGENTS SHALL NOT BE RESPONSIBLE FOR THE ACCURACY OR COMPLETENESS OF ELECTRONIC COPIES OF THIS PLAN SHEET.

PB AMERICAS, Inc.
A Parsons Brinckerhoff Company
303 Second St., Suite 700N
San Francisco, CA 94107-1317

Conduit/Tray No:	1109
Reference:	E-52
Size:	41
Type:	RGS conduit
From:	PB-COM
To:	PB-COM
Total Fill (mm2):	0.00
Remarks:	
Allowable Fill (mm2):	534.55
Description of Changes:	

Included Cable No.	Conductor Type	Area (mm2)
Pull Rope	Soft-Fiber Polyester	0.00

Conduit/Tray No:	1110
Reference:	E-52
Size:	41
Type:	RGS conduit
From:	PB-COM
To:	PB-COM
Total Fill (mm2):	0.00
Remarks:	
Allowable Fill (mm2):	534.55
Description of Changes:	

Included Cable No.	Conductor Type	Area (mm2)
Pull Rope	Soft-Fiber Polyester	0.00

Conduit/Tray No:	1111
Reference:	E-52
Size:	41
Type:	RGS conduit
From:	PB-COM
To:	PB-COM
Total Fill (mm2):	0.00
Remarks:	
Allowable Fill (mm2):	534.55
Description of Changes:	

Included Cable No.	Conductor Type	Area (mm2)
Pull Rope	Soft-Fiber Polyester	0.00

Conduit/Tray No:	1114
Reference:	E-51
Size:	41
Type:	RGS conduit
From:	PB-COM
To:	PB-COM
Total Fill (mm2):	0.00
Remarks:	
Allowable Fill (mm2):	534.55
Description of Changes:	

Included Cable No.	Conductor Type	Area (mm2)
Pull Rope	Soft-Fiber Polyester	0.00

Conduit/Tray No:	1135
Reference:	E-51
Size:	41
Type:	RGS conduit
From:	PB-COM
To:	PB-COM
Total Fill (mm2):	0.00
Remarks:	
Allowable Fill (mm2):	534.55
Description of Changes:	

Included Cable No.	Conductor Type	Area (mm2)
Pull Rope	Soft-Fiber Polyester	0.00

Conduit/Tray No:	1136
Reference:	E-51
Size:	41
Type:	RGS conduit
From:	PB-COM
To:	PB-COM
Total Fill (mm2):	0.00
Remarks:	
Allowable Fill (mm2):	534.55
Description of Changes:	

Included Cable No.	Conductor Type	Area (mm2)
Pull Rope	Soft-Fiber Polyester	0.00

Conduit/Tray No:	1137
Reference:	E-51
Size:	41
Type:	RGS conduit
From:	PB-COM
To:	PB-COM
Total Fill (mm2):	0.00
Remarks:	
Allowable Fill (mm2):	534.55
Description of Changes:	

Included Cable No.	Conductor Type	Area (mm2)
Pull Rope	Soft-Fiber Polyester	0.00

Conduit/Tray No:	1139
Reference:	E-52
Size:	41
Type:	RGS conduit
From:	PB-COM
To:	PB-COM
Total Fill (mm2):	0.00
Remarks:	
Allowable Fill (mm2):	534.55
Description of Changes:	

Included Cable No.	Conductor Type	Area (mm2)
Pull Rope	Soft-Fiber Polyester	0.00

7

Conduit/Tray No:	1139A
Reference:	E-52
Size:	41
Type:	RGS conduit
From:	PB-COM
To:	PB-COM
Total Fill (mm2):	0.00
Remarks:	
Allowable Fill (mm2):	534.55
Description of Changes:	

Included Cable No.	Conductor Type	Area (mm2)
Pull Rope	Soft-Fiber Polyester	0.00

7 REVISED PER ADDENDUM No. 7 DATED OCTOBER 19, 2009

CONDUIT AND TRAY SCHEDULE
YBI TRANSITION STRUCTURES ROADWAY WB

E-246

REVISED BY | DATE REVISED
CARMELO RIVERA | ELLERY LUCAS
CALCULATED-DESIGNED BY | CHECKED BY
CONSULTANT FUNCTIONAL SUPERVISOR
BEHZAD GOLEMOHAMMADI
STATE OF CALIFORNIA - DEPARTMENT OF TRANSPORTATION
Caltrans

LAST REVISION 00-00-00
DATE PLOTTED => 15-OCT-2009
TIME PLOTTED => 10:49

Dist	COUNTY	ROUTE	KILOMETER POST TOTAL PROJECT	SHEET No.	TOTAL SHEETS
04	SF	80	12.7/13.2	367	806

Caltrans Metric

2/14/08
REGISTERED ELECTRICAL ENGINEER

6-23-08
PLANS APPROVAL DATE

REGISTERED PROFESSIONAL ENGINEER
FADI WALIEDDINE
No. 11465
Exp. 12/31/09
ELECTRICAL
STATE OF CALIFORNIA

THE STATE OF CALIFORNIA OR ITS OFFICERS OR AGENTS SHALL NOT BE RESPONSIBLE FOR THE ACCURACY OR COMPLETENESS OF ELECTRONIC COPIES OF THIS PLAN SHEET.

PB AMERICAS, Inc.
A Parsons Brinckerhoff Company
303 Second St., Suite 700N
San Francisco, CA 94107-1317

Conduit/Tray No:	1207	Reference:	E-51, E-52
Size:	41	Type:	RGS conduit
From:	PB-COM	To:	PB-COM
Total Fill (mm2):	0.00	Remarks:	
Allowable Fill (mm2):	534.55		
Description of Changes:			

Included Cable No.	Conductor Type	Area (mm2)
Pull Rope	Soft-Fiber Polyester	0.00

Conduit/Tray No:	1208	Reference:	E-52
Size:	41	Type:	RGS conduit
From:	PB-COM	To:	PB-COM
Total Fill (mm2):	0.00	Remarks:	
Allowable Fill (mm2):	534.55		
Description of Changes:			

Included Cable No.	Conductor Type	Area (mm2)
Pull Rope	Soft-Fiber Polyester	0.00

Conduit/Tray No:	1209	Reference:	E-52
Size:	41	Type:	RGS conduit
From:	PB-COM	To:	PB-COM
Total Fill (mm2):	0.00	Remarks:	
Allowable Fill (mm2):	534.55		
Description of Changes:			

Included Cable No.	Conductor Type	Area (mm2)
Pull Rope	Soft-Fiber Polyester	0.00

Conduit/Tray No:	1210	Reference:	E-52
Size:	41	Type:	RGS conduit
From:	PB-COM	To:	PB-COM
Total Fill (mm2):	0.00	Remarks:	
Allowable Fill (mm2):	534.55		
Description of Changes:			

Included Cable No.	Conductor Type	Area (mm2)
Pull Rope	Soft-Fiber Polyester	0.00

Conduit/Tray No:	1211	Reference:	E-52
Size:	41	Type:	RGS conduit
From:	PB-COM	To:	PB-COM
Total Fill (mm2):	0.00	Remarks:	
Allowable Fill (mm2):	534.55		
Description of Changes:			

Included Cable No.	Conductor Type	Area (mm2)
Pull Rope	Soft-Fiber Polyester	0.00

Conduit/Tray No:	1213	Reference:	E-52
Size:	41	Type:	RGS conduit
From:	PB-COM	To:	PB-COM
Total Fill (mm2):	0.00	Remarks:	
Allowable Fill (mm2):	534.55		
Description of Changes:			

Included Cable No.	Conductor Type	Area (mm2)
Pull Rope	Soft-Fiber Polyester	0.00

Conduit/Tray No:	1213A	Reference:	E-52
Size:	41	Type:	RGS conduit
From:	PB-COM	To:	PB-COM
Total Fill (mm2):	0.00	Remarks:	
Allowable Fill (mm2):	534.55		
Description of Changes:			

Included Cable No.	Conductor Type	Area (mm2)
Pull Rope	Soft-Fiber Polyester	0.00

Conduit/Tray No:	1214	Reference:	E-51
Size:	41	Type:	RGS conduit
From:	PB-COM	To:	PB-COM
Total Fill (mm2):	0.00	Remarks:	
Allowable Fill (mm2):	534.55		
Description of Changes:			

Included Cable No.	Conductor Type	Area (mm2)
Pull Rope	Soft-Fiber Polyester	0.00

Conduit/Tray No:	1235	Reference:	E-51
Size:	41	Type:	RGS conduit
From:	PB-COM	To:	PB-COM
Total Fill (mm2):	0.00	Remarks:	
Allowable Fill (mm2):	534.55		
Description of Changes:			

Included Cable No.	Conductor Type	Area (mm2)
Pull Rope	Soft-Fiber Polyester	0.00

Conduit/Tray No:	1236	Reference:	E-51
Size:	41	Type:	RGS conduit
From:	PB-COM	To:	PB-COM
Total Fill (mm2):	0.00	Remarks:	
Allowable Fill (mm2):	534.55		
Description of Changes:			

Included Cable No.	Conductor Type	Area (mm2)
Pull Rope	Soft-Fiber Polyester	0.00

7 **REVISED PER ADDENDUM No. 7**
DATED OCTOBER 19, 2009

CONDUIT AND TRAY SCHEDULE
YBI TRANSITION STRUCTURES ROADWAY WB

E-248

REVISED BY | DATE REVISED
CARMELO RIVERA | ELLERY LUCAS
CALCULATED-DESIGNED BY | CHECKED BY
CONSULTANT FUNCTIONAL SUPERVISOR
BEHZAD GOLEMOHAMMADI

STATE OF CALIFORNIA - DEPARTMENT OF TRANSPORTATION
Caltrans

LAST REVISION 00-00-00 | DATE PLOTTED => 15-OCT-2009 | TIME PLOTTED => 10:50

Dist	COUNTY	ROUTE	KILOMETER POST TOTAL PROJECT	SHEET No.	TOTAL SHEETS
04	SF	80	12.7/13.2	385	806

Caltrans Metric

2/14/08
REGISTERED ELECTRICAL ENGINEER

6-23-08
PLANS APPROVAL DATE

REGISTERED PROFESSIONAL ENGINEER
FADI WALIEDDINE
No. 11465
Exp. 12/31/09
ELECTRICAL
STATE OF CALIFORNIA

THE STATE OF CALIFORNIA OR ITS OFFICERS OR AGENTS SHALL NOT BE RESPONSIBLE FOR THE ACCURACY OR COMPLETENESS OF ELECTRONIC COPIES OF THIS PLAN SHEET.

PB AMERICAS, Inc.
A Parsons Brinckerhoff Company
303 Second St., Suite 700N
San Francisco, CA 94107-1317

Conduit/Tray No:	1728
Reference:	E-52
Size:	41
Type:	RGS conduit
From:	PB-LTG
To:	PB-LTG
Total Fill (mm2):	65.61
Remarks:	
Allowable Fill (mm2):	708.28
Description of Changes:	

Included Cable No.	Conductor Type	Area (mm2)
Pull Rope	Soft-Fiber Polyester	0.00
UP103-2	3 + 1 Gnd, #12, #12, 600 V, RHH/RHW insulation	65.61

Conduit/Tray No:	1729
Reference:	E-52
Size:	41
Type:	RGS conduit
From:	PB-LTG
To:	PB-LTG
Total Fill (mm2):	0.00
Remarks:	
Allowable Fill (mm2):	708.28
Description of Changes:	

Included Cable No.	Conductor Type	Area (mm2)
Pull Rope	Soft-Fiber Polyester	0.00

Conduit/Tray No:	1770
Reference:	E-50
Size:	41
Type:	RGS conduit
From:	PB-LTG
To:	PB-LTG
Total Fill (mm2):	0.00
Remarks:	
Allowable Fill (mm2):	534.55
Description of Changes:	

Included Cable No.	Conductor Type	Area (mm2)
Pull Rope	Soft-Fiber Polyester	0.00

Conduit/Tray No:	1771
Reference:	E-50
Size:	41
Type:	RGS conduit
From:	PB-LTG
To:	PB-LTG
Total Fill (mm2):	0.00
Remarks:	
Allowable Fill (mm2):	534.55
Description of Changes:	

Included Cable No.	Conductor Type	Area (mm2)
Pull Rope	Soft-Fiber Polyester	0.00

Conduit/Tray No:	1772
Reference:	E-50
Size:	41
Type:	RGS conduit
From:	PB-LTG
To:	PB-LTG
Total Fill (mm2):	0.00
Remarks:	
Allowable Fill (mm2):	534.55
Description of Changes:	

Included Cable No.	Conductor Type	Area (mm2)
Pull Rope	Soft-Fiber Polyester	0.00

Conduit/Tray No:	1773
Reference:	E-50
Size:	41
Type:	RGS conduit
From:	PB-LTG
To:	PB-LTG
Total Fill (mm2):	0.00
Remarks:	
Allowable Fill (mm2):	534.55
Description of Changes:	

Included Cable No.	Conductor Type	Area (mm2)
Pull Rope	Soft-Fiber Polyester	0.00

7

Conduit/Tray No:	1774
Reference:	E-50
Size:	41
Type:	RGS conduit
From:	PB-LTG
To:	PB-LTG
Total Fill (mm2):	0.00
Remarks:	
Allowable Fill (mm2):	534.55
Description of Changes:	

Included Cable No.	Conductor Type	Area (mm2)
Pull Rope	Soft-Fiber Polyester	0.00

Conduit/Tray No:	1775
Reference:	E-49
Size:	41
Type:	RGS conduit
From:	PB-LTG
To:	End of conduit 1775
Total Fill (mm2):	0.00
Remarks:	Stub out conduit West of Bent #48 & cap.
Allowable Fill (mm2):	534.55
Description of Changes:	

Included Cable No.	Conductor Type	Area (mm2)
-		0.00

Conduit/Tray No:	1776
Reference:	E-49
Size:	41
Type:	RGS conduit
From:	PB-LTG
To:	PB-LTG
Total Fill (mm2):	331.99
Remarks:	
Allowable Fill (mm2):	534.55
Description of Changes:	

Included Cable No.	Conductor Type	Area (mm2)
A-1005-2	3 + 1 Gnd, #8, #10, 600 V, RHH/RHW insulation	133.19
Pull Rope	Soft-Fiber Polyester	0.00
S-1021-2	3 + 1 Gnd, #8, #10, 600 V, RHH/RHW insulation	133.19
UP101-2A	3 + 1 Gnd, #12, #12, 600 V, RHH/RHW insulation	65.61

7 **REVISED PER ADDENDUM No. 7 DATED OCTOBER 19, 2009**

CONDUIT AND TRAY SCHEDULE
YBI TRANSITION STRUCTURES ROADWAY WB

E-266

REVISED BY | DATE REVISED
CARMELO RIVERA | ELLERY LUCAS
CALCULATED-DESIGNED BY | CHECKED BY
CONSULTANT FUNCTIONAL SUPERVISOR
BEHZAD GOLEMOHAMMADI

STATE OF CALIFORNIA - DEPARTMENT OF TRANSPORTATION
Caltrans

LAST REVISION 00-00-00 | DATE PLOTTED => 15-OCT-2009 | TIME PLOTTED => 10:50

Dist	COUNTY	ROUTE	KILOMETER POST TOTAL PROJECT	SHEET No.	TOTAL SHEETS
04	SF	80	12.7/13.2	389	806

Caltrans Metric

2/14/08
REGISTERED ELECTRICAL ENGINEER

6-23-08
PLANS APPROVAL DATE

REGISTERED PROFESSIONAL ENGINEER
FADI WALIEDDINE
No. 11465
Exp. 12/31/09
ELECTRICAL
STATE OF CALIFORNIA

THE STATE OF CALIFORNIA OR ITS OFFICERS OR AGENTS SHALL NOT BE RESPONSIBLE FOR THE ACCURACY OR COMPLETENESS OF ELECTRONIC COPIES OF THIS PLAN SHEET.

PB AMERICAS, Inc.
A Parsons Brinckerhoff Company
303 Second St., Suite 700N
San Francisco, CA 94107-1317

Conduit/Tray No:	1828
Reference:	E-52
Size:	41
Type:	RGS conduit
From:	PB-LTG
To:	PB-LTG
Total Fill (mm2):	0.00
Allowable Fill (mm2):	534.55
Remarks:	
Description of Changes:	

Included Cable No.	Conductor Type	Area (mm2)
Pull Rope	Soft-Fiber Polyester	0.00

Conduit/Tray No:	1829
Reference:	E-52
Size:	41
Type:	RGS conduit
From:	PB-LTG
To:	PB-LTG
Total Fill (mm2):	0.00
Allowable Fill (mm2):	534.55
Remarks:	
Description of Changes:	

Included Cable No.	Conductor Type	Area (mm2)
Pull Rope	Soft-Fiber Polyester	0.00

Conduit/Tray No:	1870
Reference:	E-50
Size:	41
Type:	RGS conduit
From:	PB-LTG
To:	PB-LTG
Total Fill (mm2):	0.00
Allowable Fill (mm2):	534.55
Remarks:	
Description of Changes:	

Included Cable No.	Conductor Type	Area (mm2)
Pull Rope	Soft-Fiber Polyester	0.00

Conduit/Tray No:	1871
Reference:	E-50
Size:	41
Type:	RGS conduit
From:	PB-LTG
To:	PB-LTG
Total Fill (mm2):	0.00
Allowable Fill (mm2):	534.55
Remarks:	
Description of Changes:	

Included Cable No.	Conductor Type	Area (mm2)
Pull Rope	Soft-Fiber Polyester	0.00

Conduit/Tray No:	1872
Reference:	E-50
Size:	41
Type:	RGS conduit
From:	PB-LTG
To:	PB-LTG
Total Fill (mm2):	0.00
Allowable Fill (mm2):	534.55
Remarks:	
Description of Changes:	

Included Cable No.	Conductor Type	Area (mm2)
Pull Rope	Soft-Fiber Polyester	0.00

Conduit/Tray No:	1873
Reference:	E-50
Size:	41
Type:	RGS conduit
From:	PB-LTG
To:	PB-LTG
Total Fill (mm2):	0.00
Allowable Fill (mm2):	534.55
Remarks:	
Description of Changes:	

Included Cable No.	Conductor Type	Area (mm2)
Pull Rope	Soft-Fiber Polyester	0.00

7

Conduit/Tray No:	1874
Reference:	E-50
Size:	41
Type:	RGS conduit
From:	PB-LTG
To:	PB-LTG
Total Fill (mm2):	0.00
Allowable Fill (mm2):	534.55
Remarks:	
Description of Changes:	

Included Cable No.	Conductor Type	Area (mm2)
Pull Rope	Soft-Fiber Polyester	0.00

Conduit/Tray No:	1875
Reference:	E-49
Size:	41
Type:	RGS conduit
From:	PB-LTG
To:	End of conduit 1875
Total Fill (mm2):	0.00
Allowable Fill (mm2):	534.55
Remarks:	Stub out conduit West of Bent #48 & cap.
Description of Changes:	

Included Cable No.	Conductor Type	Area (mm2)
-		0.00

Conduit/Tray No:	1876
Reference:	E-49
Size:	41
Type:	RGS conduit
From:	PB-LTG
To:	PB-LTG
Total Fill (mm2):	0.00
Allowable Fill (mm2):	534.55
Remarks:	
Description of Changes:	

Included Cable No.	Conductor Type	Area (mm2)
Pull Rope	Soft-Fiber Polyester	0.00

7 **REVISED PER ADDENDUM No. 7 DATED OCTOBER 19, 2009**

CONDUIT AND TRAY SCHEDULE
YBI TRANSITION STRUCTURES ROADWAY WB

E-270

REVISED BY | DATE REVISED
CARMELO RIVERA | ELLERY LUCAS
CALCULATED-DESIGNED BY | CHECKED BY
CONSULTANT FUNCTIONAL SUPERVISOR
BEHZAD GOLEMOHAMMADI
STATE OF CALIFORNIA - DEPARTMENT OF TRANSPORTATION
Caltrans

LAST REVISION 00-00-00 | DATE PLOTTED => 15-OCT-2009 | TIME PLOTTED => 0:50

DIST.	COUNTY	ROUTE	KILOMETER POST TOTAL PROJECT	SHEET NO.	TOTAL SHEETS
04	SF	80	12.7/13.2	556	806

REGISTERED ENGINEER - CIVIL

6-23-08
PLANS APPROVAL DATE

REGISTERED PROFESSIONAL ENGINEER A.L. ELY No. 18880 Exp. 6-30-09 CIVIL STATE OF CALIFORNIA

The State of California or its officers or agents shall not be responsible for the accuracy or completeness of electronic copies of this plan sheet.

T.Y. LIN / MOFFATT & NICHOL
TWO HARRISON STREET
SAN FRANCISCO, CA 94105

Caltrans Metric

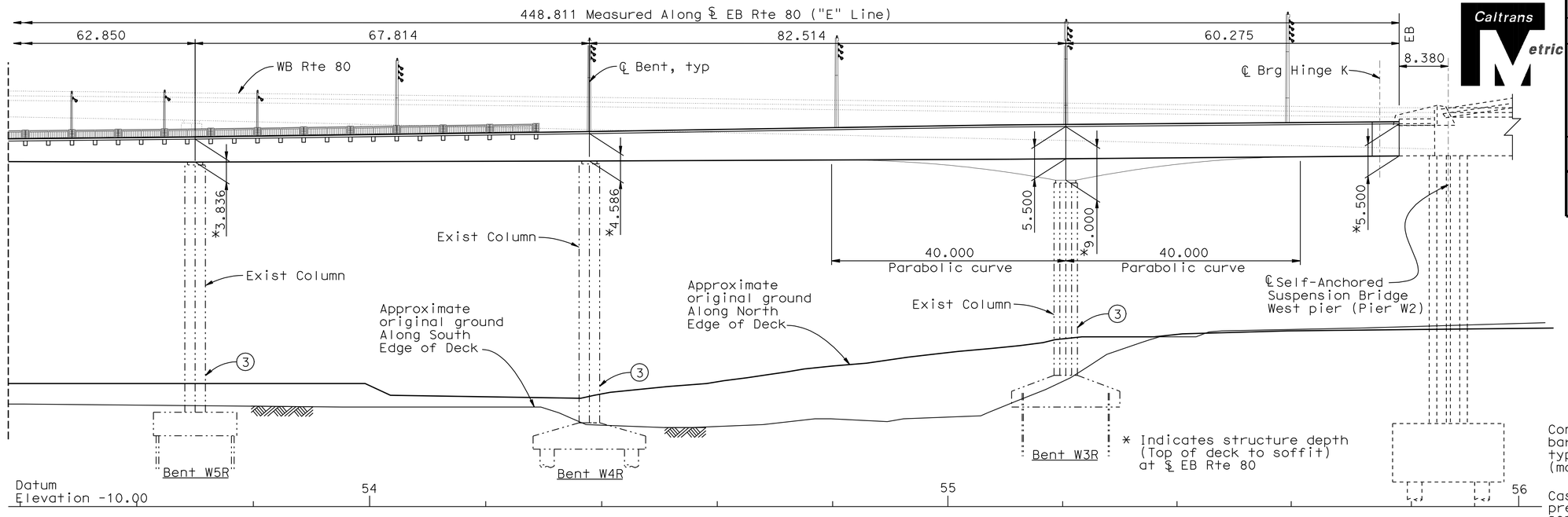

PARTIAL ELEVATION
1:400

7 REVISED PER ADDENDUM No. 7 DATED OCTOBER 19, 2009

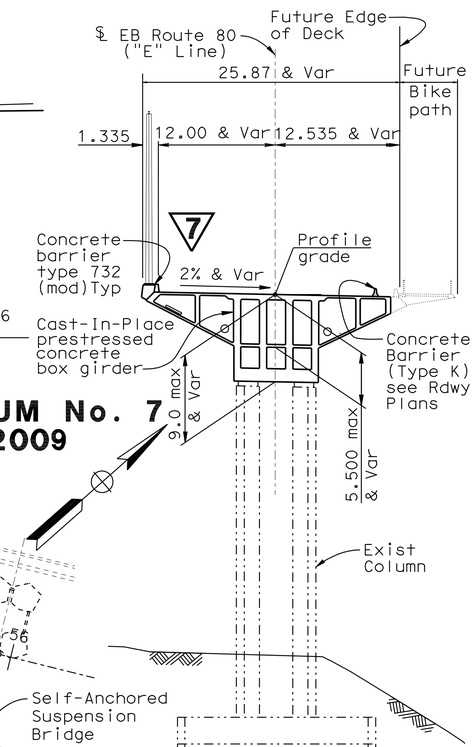

TYPICAL SECTION
(Bent W3R shown)
1:300

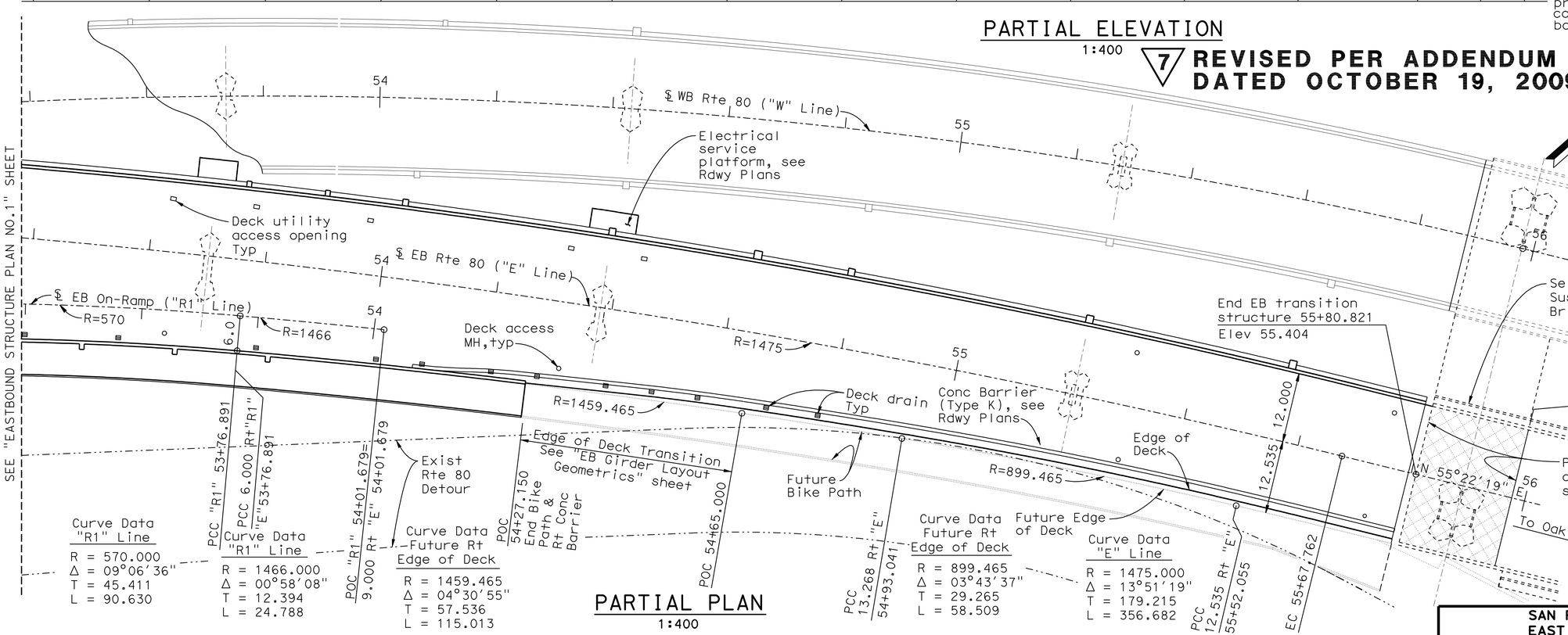

PARTIAL PLAN
1:400

SEE "EASTBOUND STRUCTURE PLAN NO.1" SHEET

Sept 29, 2009

NOTE:
For additional notes see "Eastbound Structure Plan No. 1" sheet.

ALL DIMENSIONS ARE IN METERS UNLESS OTHERWISE SHOWN

DESIGN OVERSIGHT
JOHN MOOK, BERNARD CHAN, JUAN F. CARPIO
March 3, 2008
SIGN OFF DATE

Rev. Date: 5-18-98

	BY	CHECKED
DESIGN	Desai	Jain
DETAILS	van Ryn/Zucchi/Mai	Jain
QUANTITIES	Liao	E. Nichol

ORIGINAL SCALE IN MILLIMETERS FOR REDUCED PLANS 0 10 20 30 40 50 60 70 80 90 100

PREPARED FOR THE STATE OF CALIFORNIA DEPARTMENT OF TRANSPORTATION

Jal Birdy
PROJECT ENGINEER

BRIDGE NO. 34-0006 L/R
KILOMETER POST 12.8

CU 04251
EA 0120S1

DISREGARD PRINTS BEARING EARLIER REVISION DATES

REVISION DATES (PRELIMINARY STAGE ONLY): 9/13/07 01/24/08 3/28/08 3/28/08 8/28/09 9/29/09 3/3/06 10/27/06 1/24/07 6/25/07

SHEET 7 OF 209

SAN FRANCISCO OAKLAND BAY BRIDGE
EAST SPAN SEISMIC SAFETY PROJECT

YBI TRANSITION STRUCTURES

EASTBOUND STRUCTURE PLAN NO.2

FILE => 04-0120s1-34-006r1-c-sp04.add

USERNAME => trmikesl DATE PLOTTED => 15-OCT-2009 TIME PLOTTED => 10:50

DIST.	COUNTY	ROUTE	KILOMETER POST TOTAL PROJECT	SHEET NO.	TOTAL SHEETS
04	SF	80	12.7/13.2	568	806

REGISTERED ENGINEER - CIVIL

6-23-08
PLANS APPROVAL DATE

REGISTERED PROFESSIONAL ENGINEER A.L. ELY No. 18880 Exp. 6-30-09 CIVIL STATE OF CALIFORNIA

The State of California or its officers or agents shall not be responsible for the accuracy or completeness of electronic copies of this plan sheet.

T.Y. LIN / MOFFATT & NICHOL
TWO HARRISON STREET
SAN FRANCISCO, CA 94105

**Dimension shown is measured along ℄ bent

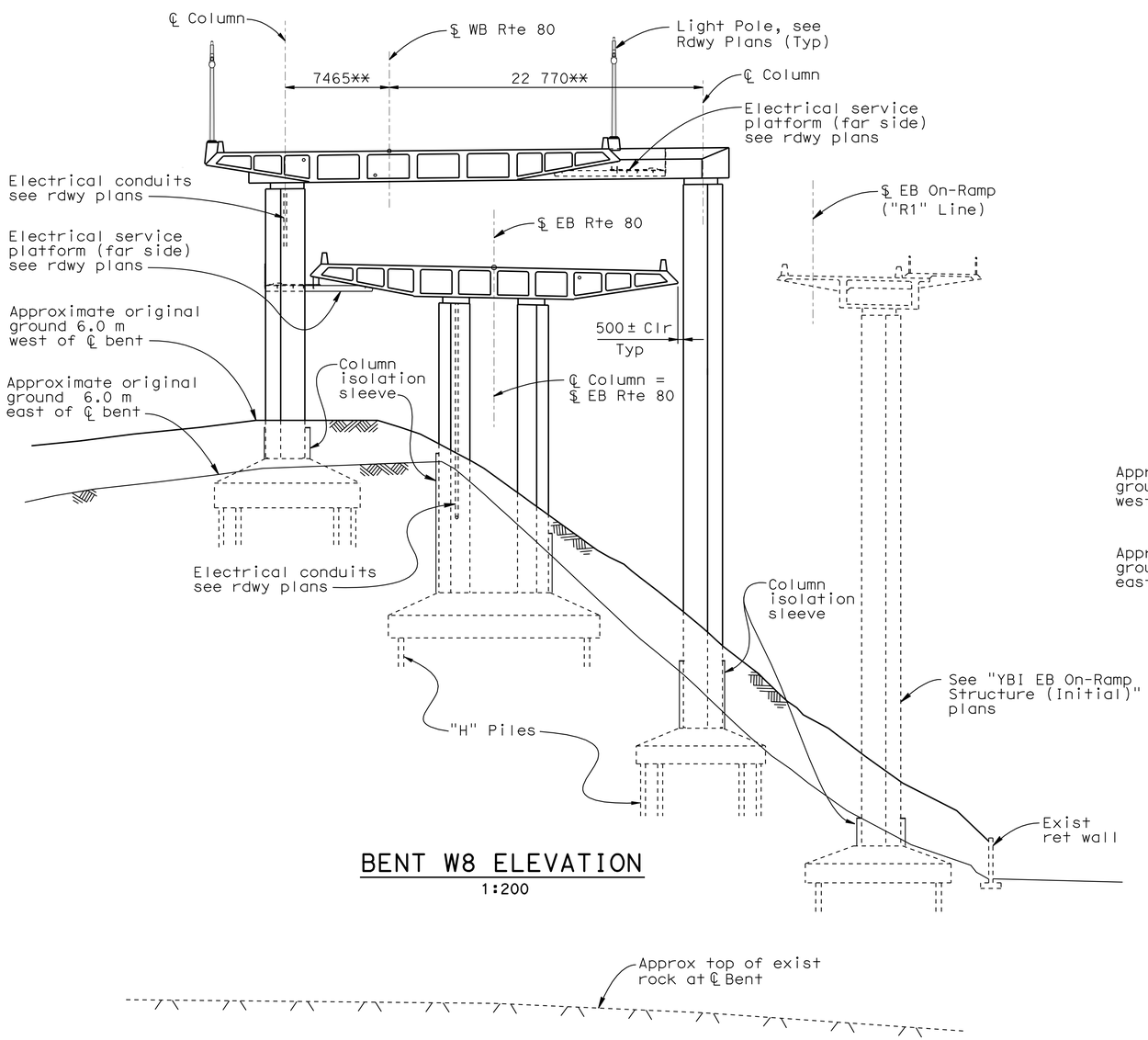

BENT W8 ELEVATION
1:200

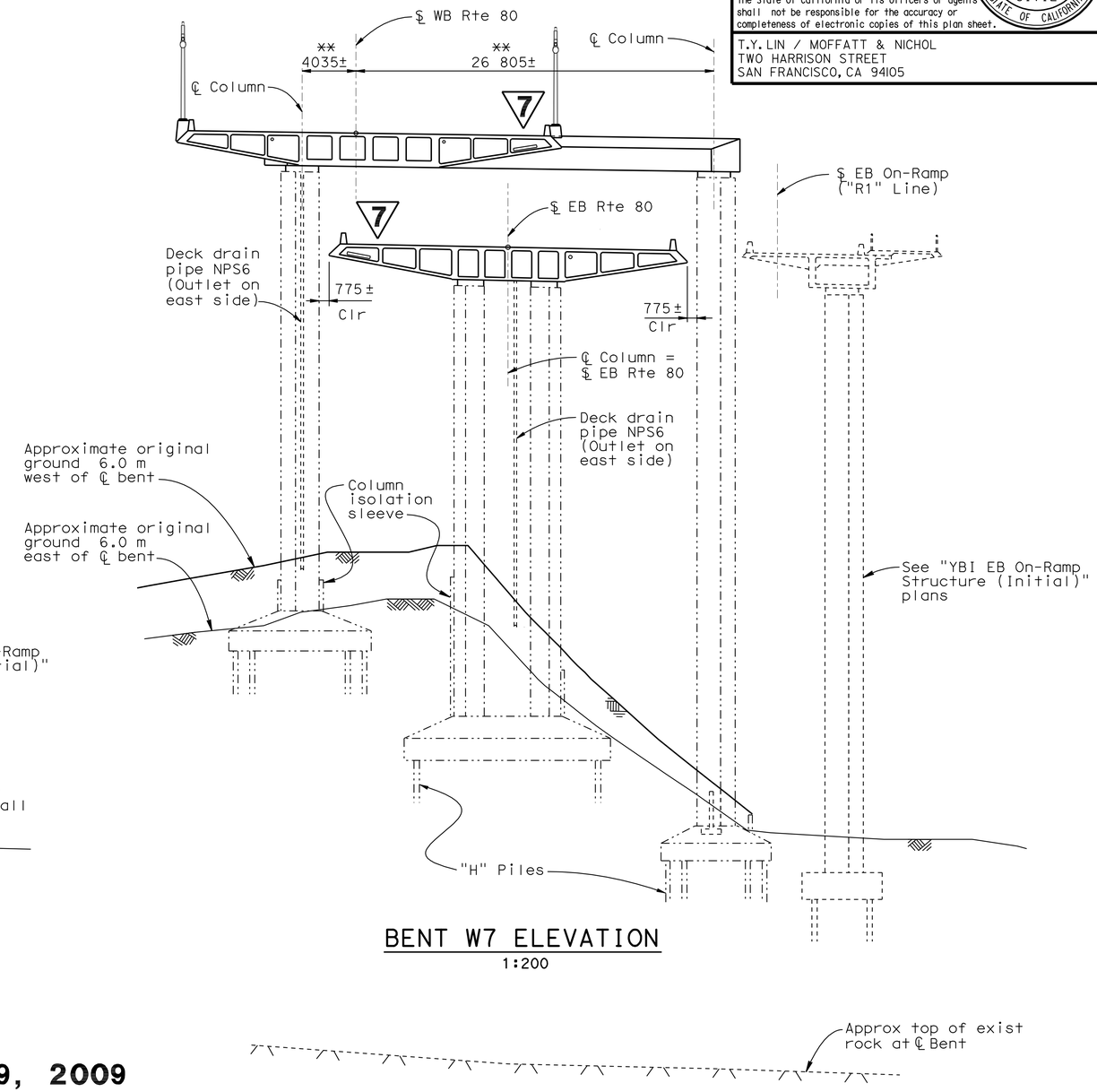

BENT W7 ELEVATION
1:200

7 **REVISED PER ADDENDUM No. 7 DATED OCTOBER 19, 2009**

DESIGN OVERSIGHT
JOHN MOOK, BERNARD CHAN, JUAN F. CARPIO
March 3, 2008
SIGN OFF DATE

Rev. Date: 5-18-98

	BY	CHECKED
DESIGN	Desai	Jain
DETAILS	van Ryn/Zucchi/Mai	Jain
QUANTITIES	Liao	E. Nichol

ORIGINAL SCALE IN MILLIMETERS FOR REDUCED PLANS 0 10 20 30 40 50 60 70 80 90 100

PREPARED FOR THE STATE OF CALIFORNIA DEPARTMENT OF TRANSPORTATION

Jal Birdy
PROJECT ENGINEER

CU 04251
EA 0120S1

BRIDGE NO. 34-0006 L/R
KILOMETER POST 12.8

SAN FRANCISCO OAKLAND BAY BRIDGE
EAST SPAN SEISMIC SAFETY PROJECT

YBI TRANSITION STRUCTURES

BENT ELEVATIONS W8 TO W7

DISREGARD PRINTS BEARING EARLIER REVISION DATES

REVISION DATES (PRELIMINARY STAGE ONLY): 9/13/07 01/31/08 3/31/08 8/28/09 9/29/09 2/14/05 1/3/06 10/2/06 1/24/07 6/28/07

SHEET 19 OF 209

FILE => 04-0120s1-34-006r1-h-bdet02.add

Sept 29, 2009

USERNAME => trmikes1 DATE PLOTTED => 15-OCT-2009 TIME PLOTTED => 10:51

DIST.	COUNTY	ROUTE	KILOMETER POST TOTAL PROJECT	SHEET NO.	TOTAL SHEETS
04	SF	80	12.7/13.2	581	806

Caltrans Metric

REGISTERED ENGINEER - CIVIL

6-23-08
PLANS APPROVAL DATE

REGISTERED PROFESSIONAL ENGINEER A.L. ELY No. 18880 Exp. 6-30-09 CIVIL STATE OF CALIFORNIA

The State of California or its officers or agents shall not be responsible for the accuracy or completeness of electronic copies of this plan sheet.

T.Y. LIN / MOFFATT & NICHOL
TWO HARRISON STREET
SAN FRANCISCO, CA 94105

7

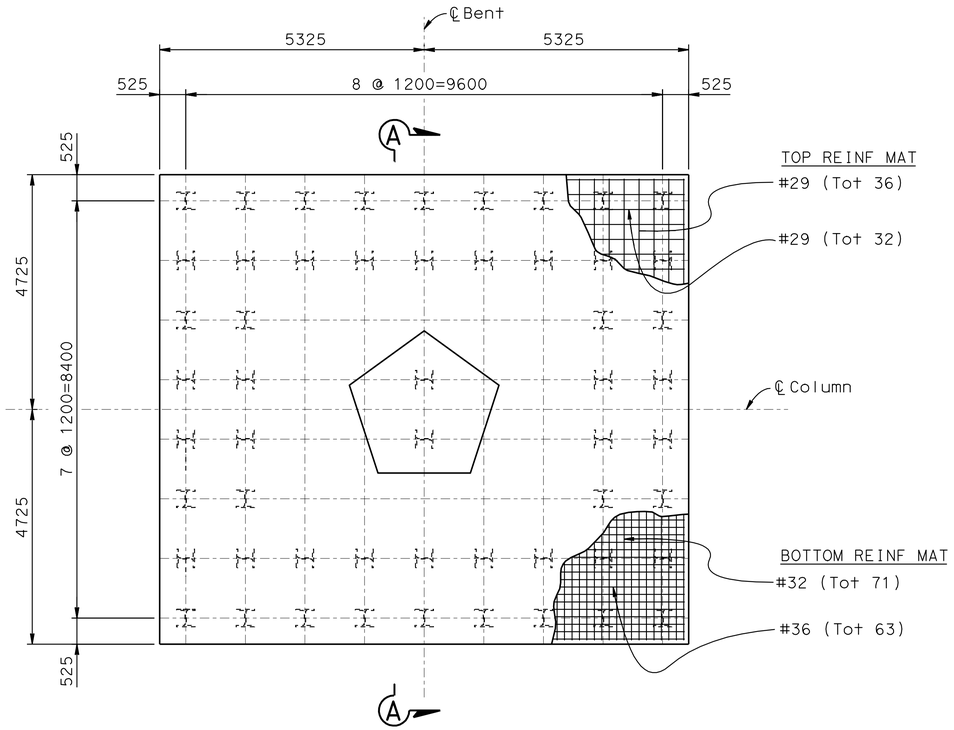

FOOTING PLAN - NORTH COLUMN
(Tot 54 piles)
1:60

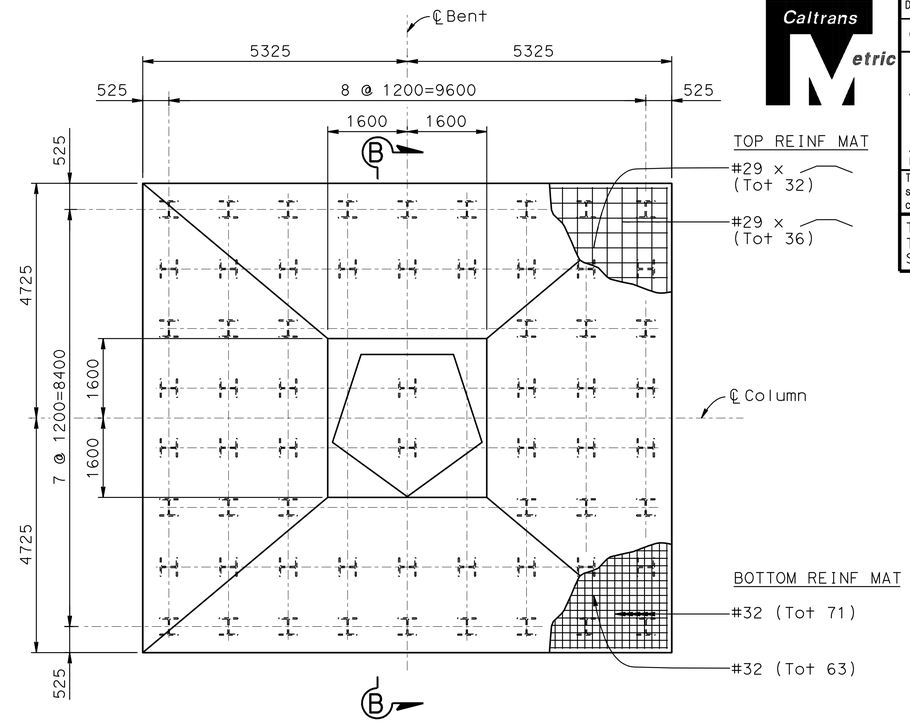

FOOTING PLAN - SOUTH COLUMN
(Tot 62 piles)
1:60

7 REVISED PER ADDENDUM No. 7 DATED OCTOBER 19, 2009

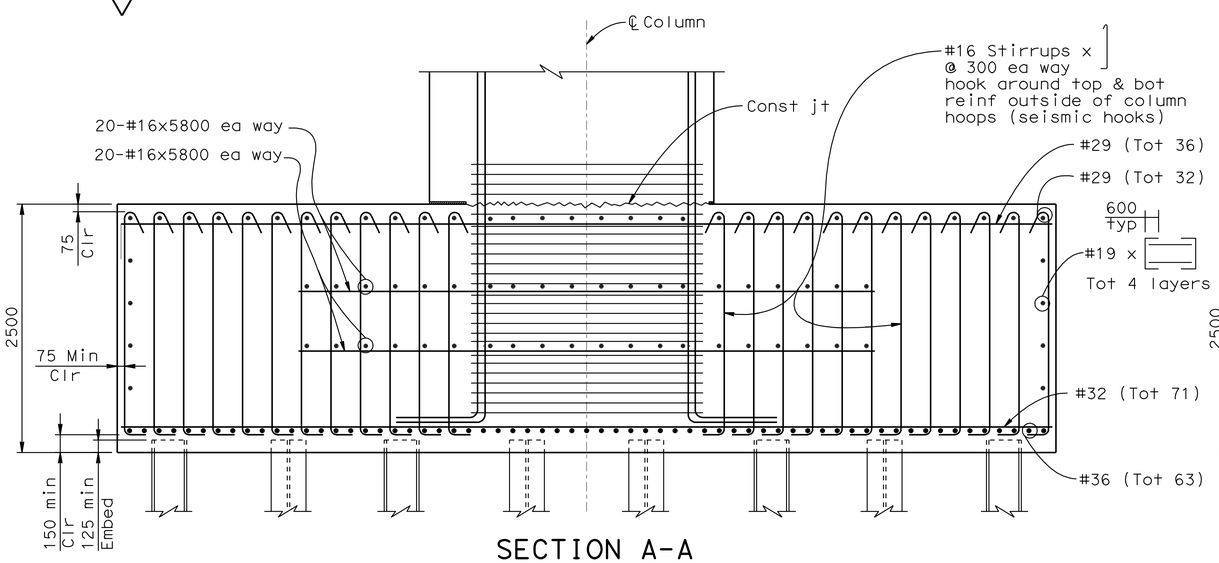

SECTION A-A
1:30

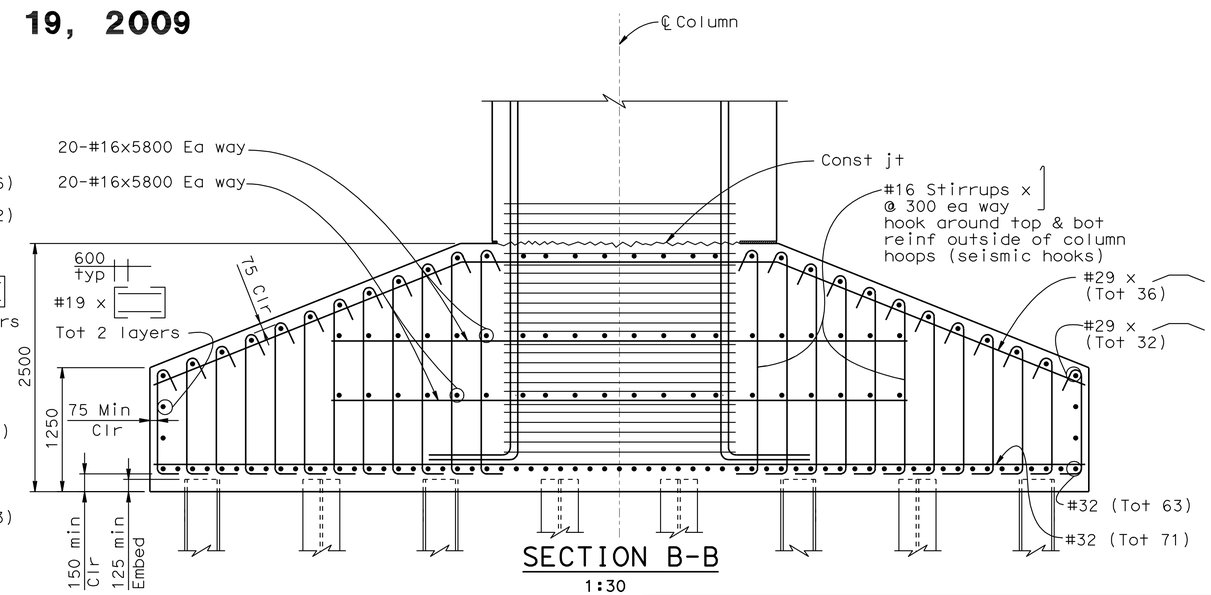

SECTION B-B
1:30

ALL DIMENSIONS ARE IN MILLIMETERS UNLESS OTHERWISE SHOWN

SAN FRANCISCO OAKLAND BAY BRIDGE
EAST SPAN SEISMIC SAFETY PROJECT

YBI TRANSITION STRUCTURES

BENT W9L DETAILS NO.4

DESIGN OVERSIGHT
JOHN MOOK, BERNARD CHAN, JUAN F. CARPIO
March 3, 2008
SIGN OFF DATE

	BY	CHECKED
DESIGN	Dodd	Desai
DETAILS	van Ryn/Zucchi/Mai	Jain
QUANTITIES	Liao	E. Nichol

PREPARED FOR THE STATE OF CALIFORNIA DEPARTMENT OF TRANSPORTATION

Jal Birdy
PROJECT ENGINEER

BRIDGE NO. 34-0006 L/R
KILOMETER POST 12.8

CU 04251
EA 0120S1

Rev. Date: 5-18-98

ORIGINAL SCALE IN MILLIMETERS FOR REDUCED PLANS 0 10 20 30 40 50 60 70 80 90 100

DISREGARD PRINTS BEARING EARLIER REVISION DATES

REVISION DATES (PRELIMINARY STAGE ONLY) 9/13/07 01/24/08 3/28/08 5/22/09 8/22/09 9/29/09 3/3/06 10/27/06 1/24/07 6/25/07

SHEET 32 OF 209

FILE => 04-0120s1-34-006r1-h-bdet15.add

Sept 29, 2009

USERNAME => trmikesl DATE PLOTTED => 15-OCT-2009 TIME PLOTTED => 10:51

DIST.	COUNTY	ROUTE	KILOMETER POST TOTAL PROJECT	SHEET NO.	TOTAL SHEETS
04	SF	80	12.7/13.2	586	806

Caltrans Metric

REGISTERED ENGINEER - CIVIL

6-23-08
PLANS APPROVAL DATE

REGISTERED PROFESSIONAL ENGINEER A.L. ELY No. 18880 Exp. 6-30-09 CIVIL STATE OF CALIFORNIA

The State of California or its officers or agents shall not be responsible for the accuracy or completeness of electronic copies of this plan sheet.

T.Y. LIN / MOFFATT & NICHOL
TWO HARRISON STREET
SAN FRANCISCO, CA 94105

7

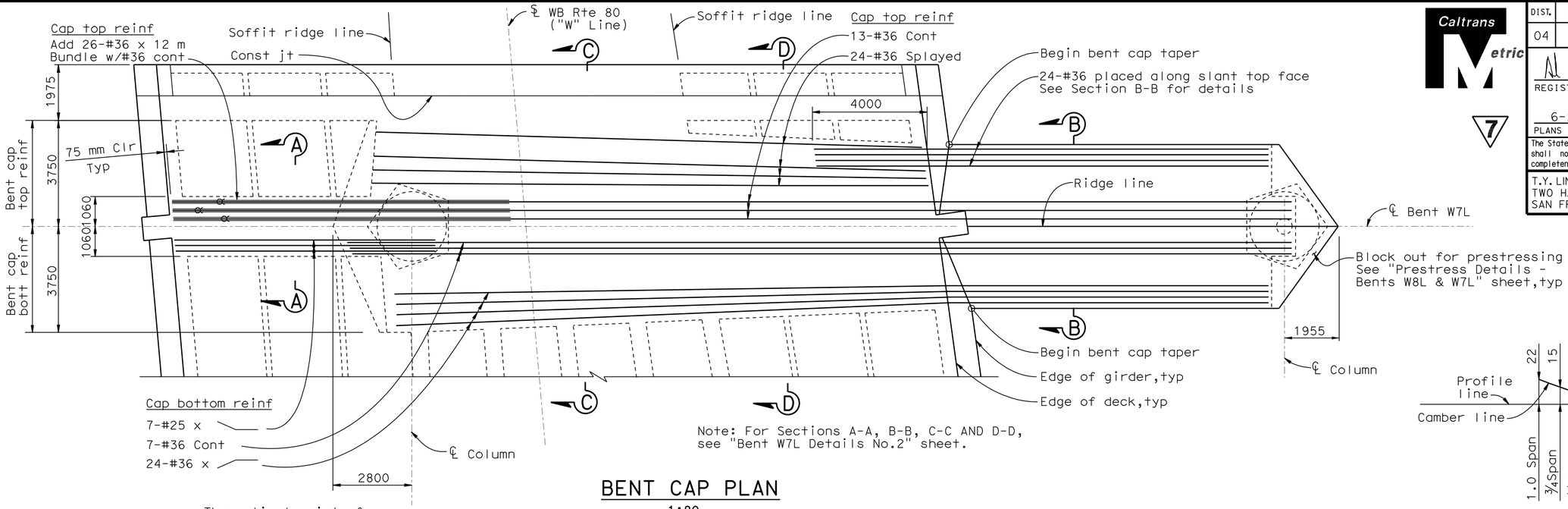

BENT CAP PLAN

1:80

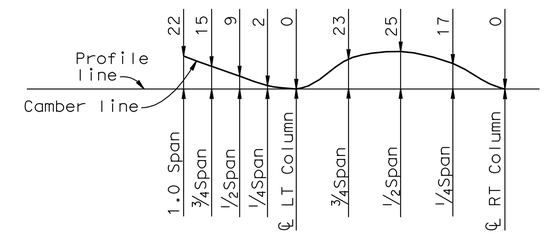

BENT CAP CAMBER DIAGRAM

No scale

Note:
Camber values shown
do not include allowance
for falsework settlement.

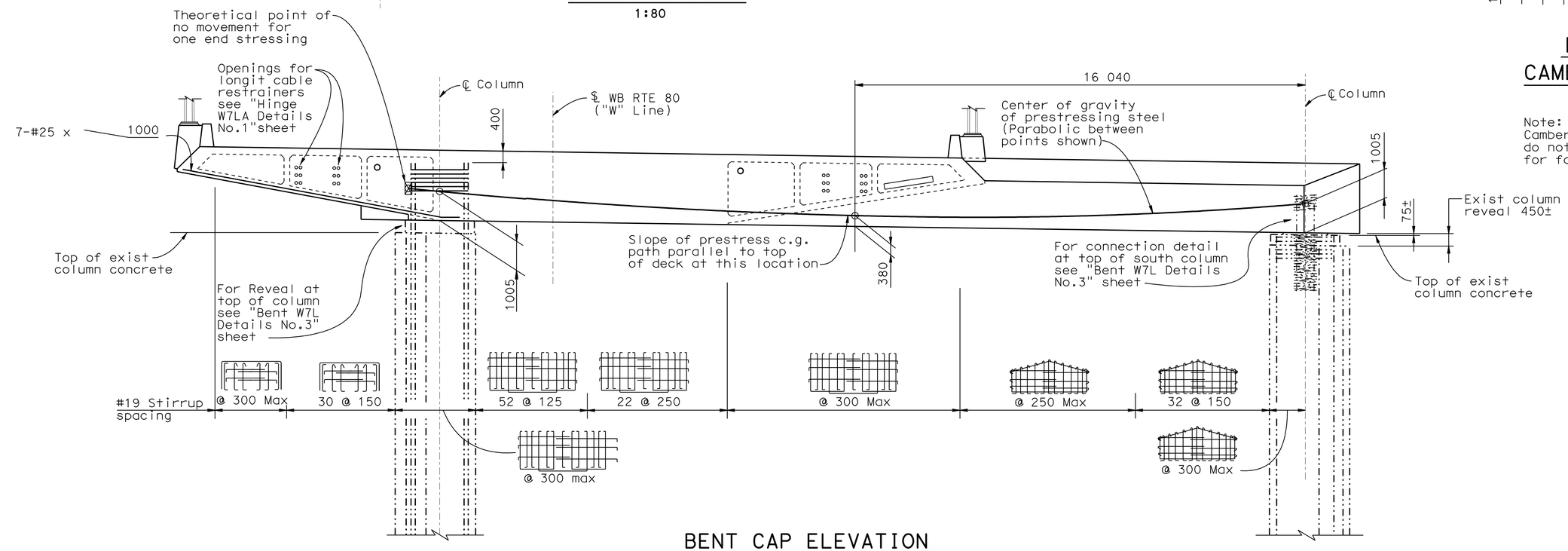

BENT CAP ELEVATION

1:80

7 **REVISED PER ADDENDUM No. 7 DATED OCTOBER 19, 2009**

ALL DIMENSIONS ARE IN MILLIMETERS UNLESS OTHERWISE SHOWN

DESIGN OVERSIGHT
JOHN MOOK, BERNARD CHAN, JUAN F. CARPIO
March 3, 2008
SIGN OFF DATE

Rev. Date: 5-18-98

	BY	CHECKED
DESIGN	Xie	Ann
DETAILS	van Ryn/Zucchi/Mai	Jain
QUANTITIES	Liao	E. Nichol

PREPARED FOR THE STATE OF CALIFORNIA DEPARTMENT OF TRANSPORTATION

Jal Birdy
PROJECT ENGINEER

BRIDGE NO. 34-0006 L/R
KILOMETER POST 12.8

SAN FRANCISCO OAKLAND BAY BRIDGE
EAST SPAN SEISMIC SAFETY PROJECT

YBI TRANSITION STRUCTURES

BENT W7L DETAILS NO.1

ORIGINAL SCALE IN MILLIMETERS FOR REDUCED PLANS 0 10 20 30 40 50 60 70 80 90 100

CU 04251
EA 0120S1

DISREGARD PRINTS BEARING EARLIER REVISION DATES

REVISION DATES (PRELIMINARY STAGE ONLY) 9/13/07 01/31/08 3/31/08 5/22/09 8/28/09 9/29/09 1/31/06 10/12/06 1/24/07 6/28/07

SHEET 37 OF 209

FILE => 04-0120s1-34-006rl-h-bdet20.add

Sept 29, 2009

USERNAME => ttmikes1 DATE PLOTTED => 15-OCT-2009 TIME PLOTTED => 10:51

DIST.	COUNTY	ROUTE	KILOMETER POST TOTAL PROJECT	SHEET NO.	TOTAL SHEETS
04	SF	80	12.7/13.2	587	806

Caltrans Metric

REGISTERED ENGINEER - CIVIL

6-23-08
PLANS APPROVAL DATE

REGISTERED PROFESSIONAL ENGINEER A.L. ELY No. 18880 Exp. 6-30-09 CIVIL STATE OF CALIFORNIA

The State of California or its officers or agents shall not be responsible for the accuracy or completeness of electronic copies of this plan sheet.

T.Y. LIN / MOFFATT & NICHOL
TWO HARRISON STREET
SAN FRANCISCO, CA 94105

7

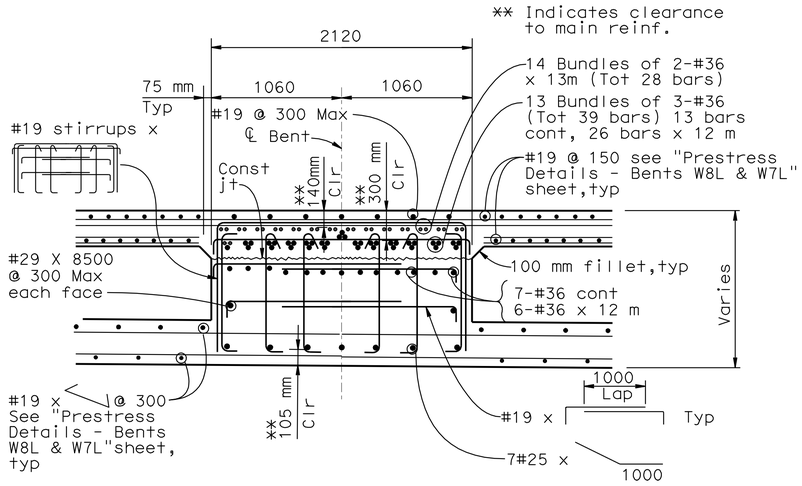

SECTION A-A
1:25

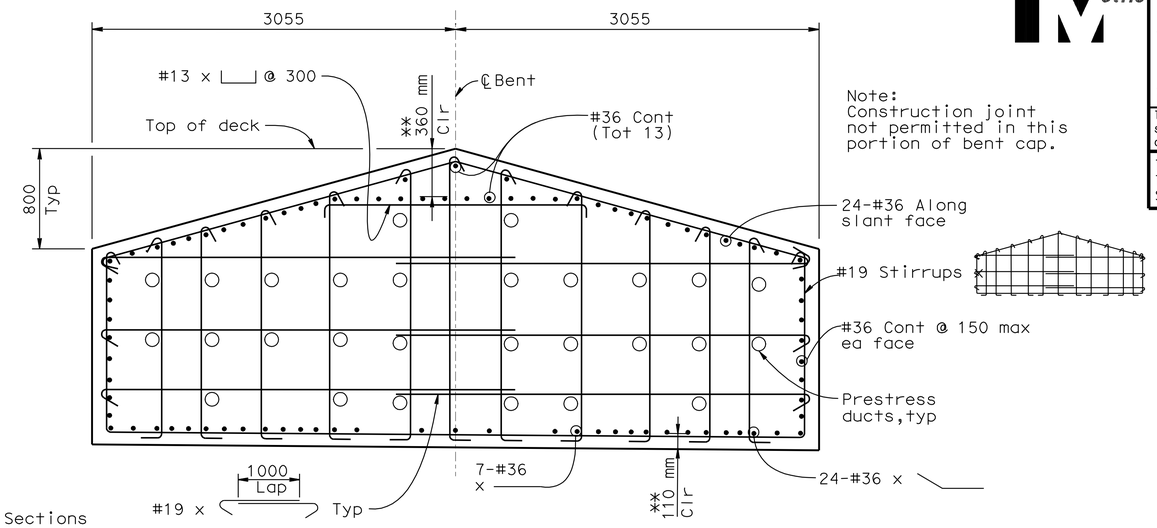

Note:
Construction joint not permitted in this portion of bent cap.

Note:
For location of Sections A-A, B-B, C-C & D-D, see "Bent W7L Details No.1" sheet.

SECTION B-B
1:25

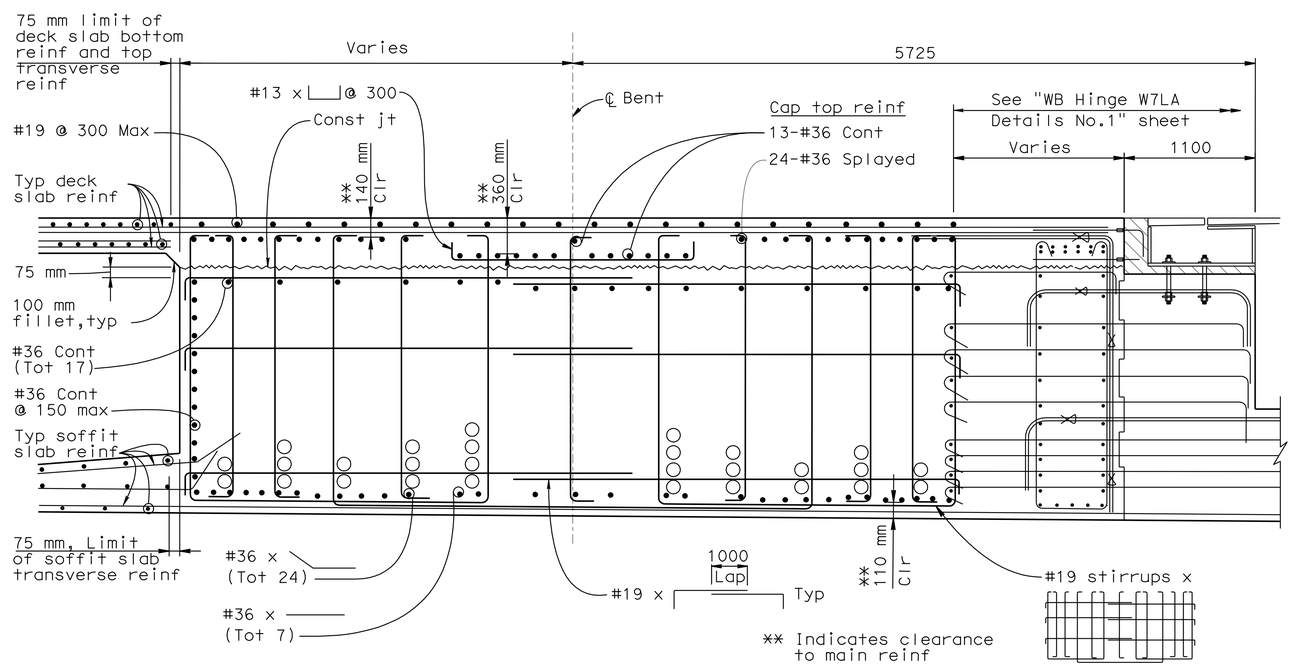

SECTION C-C
1:25

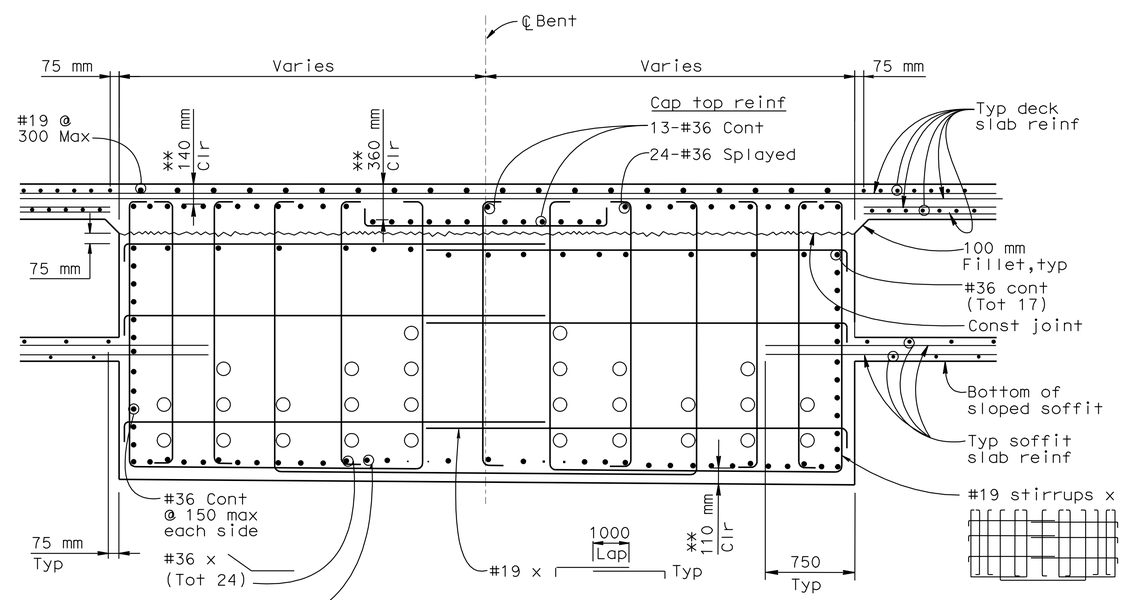

Note:
For dimensions & details not shown, see Section C-C.

SECTION D-D
1:25

7 **REVISED PER ADDENDUM No. 7 DATED OCTOBER 19, 2009**

ALL DIMENSIONS ARE IN MILLIMETERS UNLESS OTHERWISE SHOWN

DESIGN OVERSIGHT
JOHN MOOK, BERNARD CHAN, JUAN F. CARPIO
March 3, 2008
SIGN OFF DATE

Rev. Date: 5-18-98

	BY	CHECKED
DESIGN	Xie	Ahn
DETAILS	van Ryn/Zucchi/Mai	Jain
QUANTITIES	Liao	E. Nichol

ORIGINAL SCALE IN MILLIMETERS FOR REDUCED PLANS 0 10 20 30 40 50 60 70 80 90 100

PREPARED FOR THE STATE OF CALIFORNIA DEPARTMENT OF TRANSPORTATION

Jal Birdy
PROJECT ENGINEER

CU 04251
EA 0120S1

BRIDGE NO. 34-0006 L/R
KILOMETER POST 12.8

DISREGARD PRINTS BEARING EARLIER REVISION DATES

REVISION DATES (PRELIMINARY STAGE ONLY): 9/13/07 01/31/08 3/3/08 8/28/09 9/29/09 2/14/05 7/3/06 10/2/06 1/24/07 6/25/07

SHEET 38 OF 209

SAN FRANCISCO OAKLAND BAY BRIDGE
EAST SPAN SEISMIC SAFETY PROJECT

YBI TRANSITION STRUCTURES

BENT W7L DETAILS NO.2

FILE => 04-0120s1-34-006r1-h-bdet21.add

Sept 29, 2009

USERNAME => trmikes1 DATE PLOTTED => 15-OCT-2009 TIME PLOTTED => 10:52

DIST.	COUNTY	ROUTE	KILOMETER POST TOTAL PROJECT	SHEET NO.	TOTAL SHEETS
04	SF	80	12.7/13.2	596	806

REGISTERED ENGINEER - CIVIL

6-23-08
PLANS APPROVAL DATE

REGISTERED PROFESSIONAL ENGINEER A.L. ELY No. 18880 Exp. 6-30-09 CIVIL STATE OF CALIFORNIA

The State of California or its officers or agents shall not be responsible for the accuracy or completeness of electronic copies of this plan sheet.

T.Y. LIN / MOFFATT & NICHOL
TWO HARRISON STREET
SAN FRANCISCO, CA 94105

Caltrans Metric

7

Note: For Section B-B see "Bent W3L Details No. 1" sheet

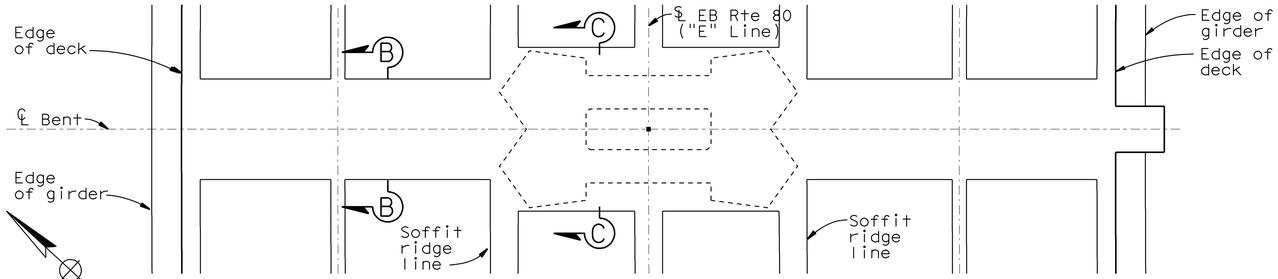

BENT CAP PLAN
1:80

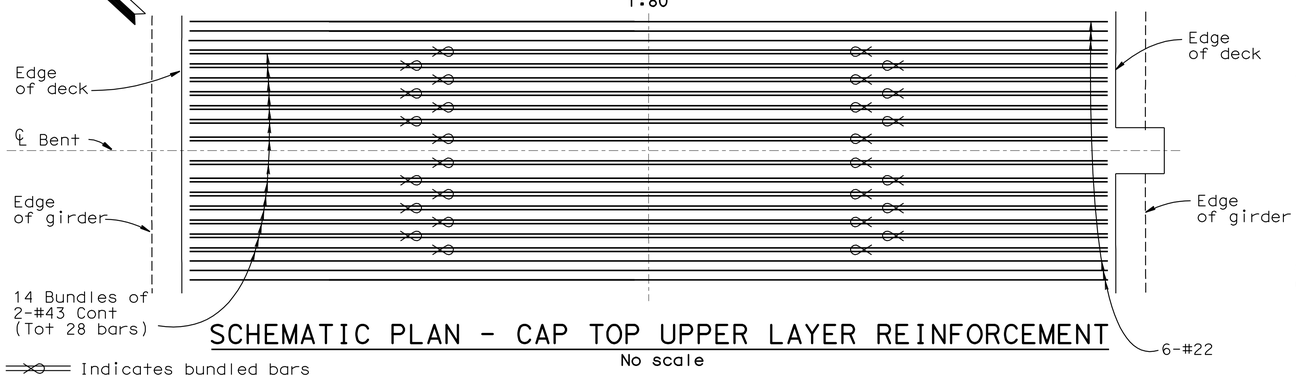

SCHEMATIC PLAN - CAP TOP UPPER LAYER REINFORCEMENT
No scale

Indicates bundled bars

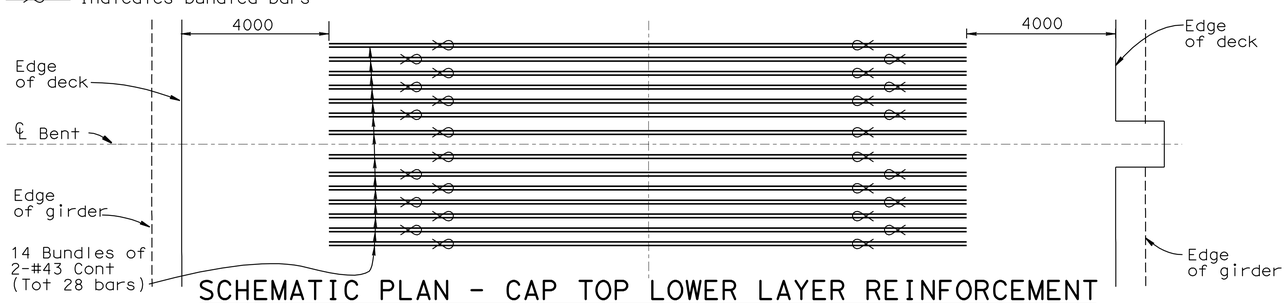

SCHEMATIC PLAN - CAP TOP LOWER LAYER REINFORCEMENT
No scale

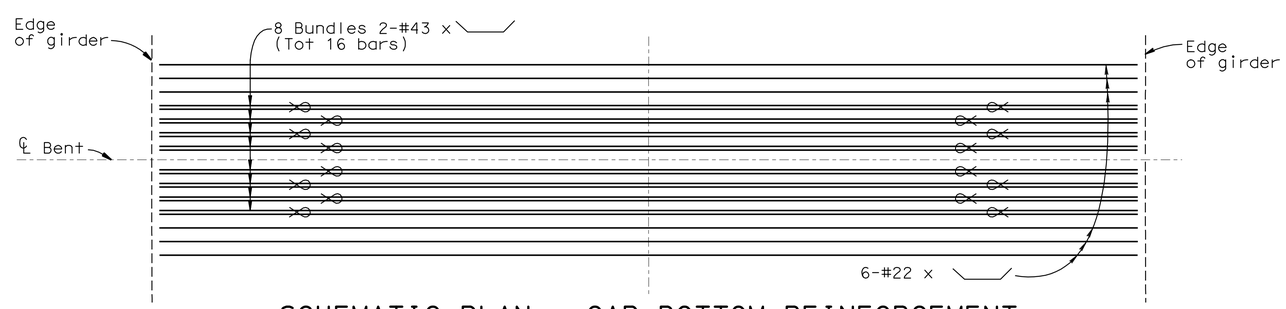

SCHEMATIC PLAN - CAP BOTTOM REINFORCEMENT
No scale

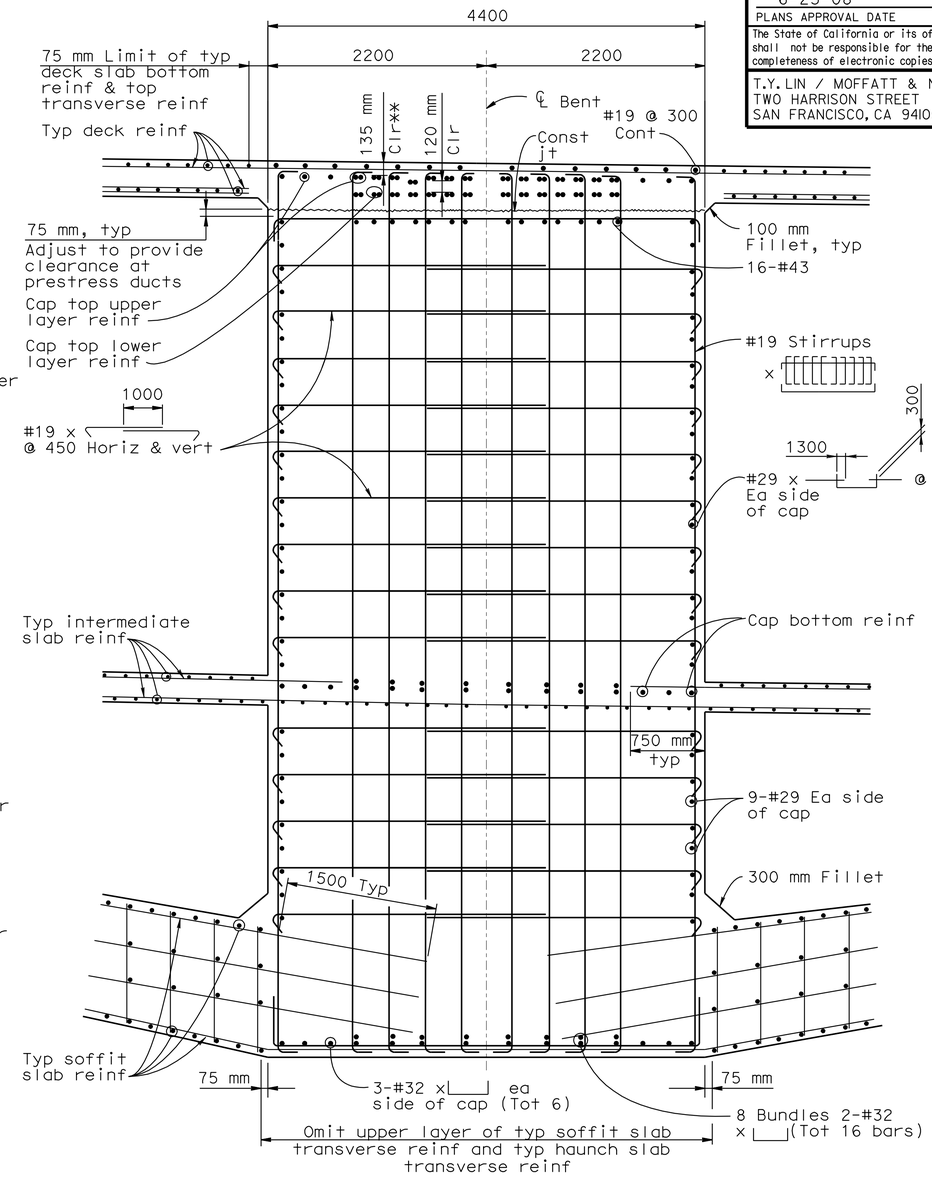

SECTION C-C
1:30

** indicates clearance to main reinf

7 **REVISED PER ADDENDUM No. 7 DATED OCTOBER 19, 2009**

Note: Bent cap details shown on this sheet are typical for Bents W3L, & W3R

ALL DIMENSIONS ARE IN MILLIMETERS UNLESS OTHERWISE SHOWN

DESIGN OVERSIGHT
JOHN MOOK, BERNARD CHAN, JUAN F. CARPIO
March 3, 2008
SIGN OFF DATE

Rev. Date: 5-18-98

	BY	CHECKED
DESIGN	Wang	Greer
DETAILS	van Ryn/Zucchi/Mai	Jain
QUANTITIES	Liao	E. Nichol

ORIGINAL SCALE IN MILLIMETERS FOR REDUCED PLANS 0 10 20 30 40 50 60 70 80 90 100

PREPARED FOR THE STATE OF CALIFORNIA DEPARTMENT OF TRANSPORTATION

Jal Birdy
PROJECT ENGINEER

BRIDGE NO. 34-0006 L/R
KILOMETER POST 12.8

SAN FRANCISCO OAKLAND BAY BRIDGE
EAST SPAN SEISMIC SAFETY PROJECT

YBI TRANSITION STRUCTURES

BENT W3L DETAILS NO.2

CU 04251
EA 0120S1

DISREGARD PRINTS BEARING EARLIER REVISION DATES

REVISION DATES (PRELIMINARY STAGE ONLY) 9/13/07 01/24/08 3/3/08 8/28/09 9/29/09 2/24/03 7/3/06 10/4/06 1/24/07 6/25/07

SHEET 47 OF 209

FILE => 04-0120s1-34-006r1-h-bdet30.add

Sept 29, 2009

USERNAME => tmikesl DATE PLOTTED => 15-OCT-2009 TIME PLOTTED => 10:52

DIST.	COUNTY	ROUTE	KILOMETER POST TOTAL PROJECT	SHEET NO.	TOTAL SHEETS
04	SF	80	12.7/13.2	597	806

REGISTERED ENGINEER - CIVIL

6-23-08
PLANS APPROVAL DATE

REGISTERED PROFESSIONAL ENGINEER A.L. ELY No. 18880 Exp. 6-30-09 CIVIL STATE OF CALIFORNIA

The State of California or its officers or agents shall not be responsible for the accuracy or completeness of electronic copies of this plan sheet.

T.Y. LIN / MOFFATT & NICHOL
TWO HARRISON STREET
SAN FRANCISCO, CA 94105

Caltrans Metric

7

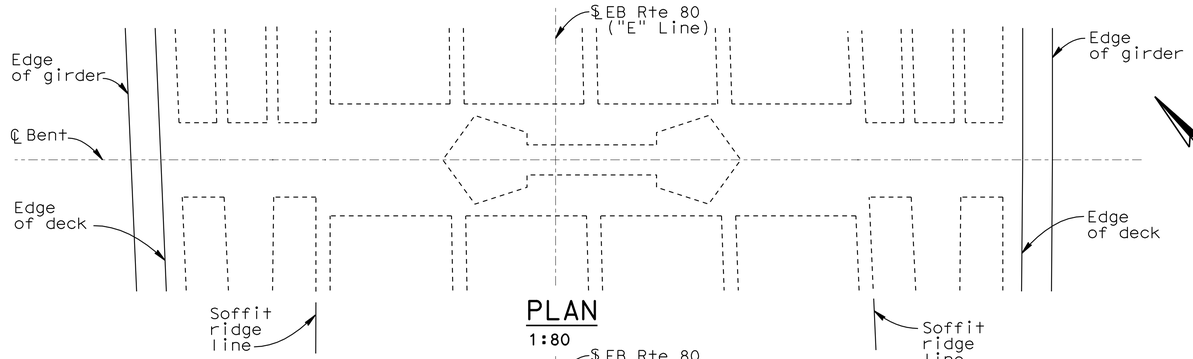

PLAN
1:80

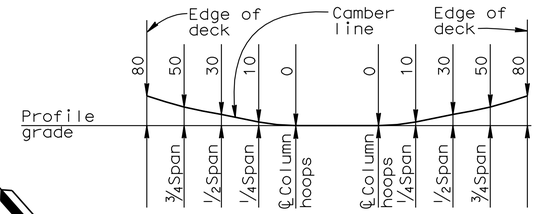

BENT CAP CAMBER DIAGRAM
NO SCALE

Note: Camber diagram does not include allowance for falsework settlement

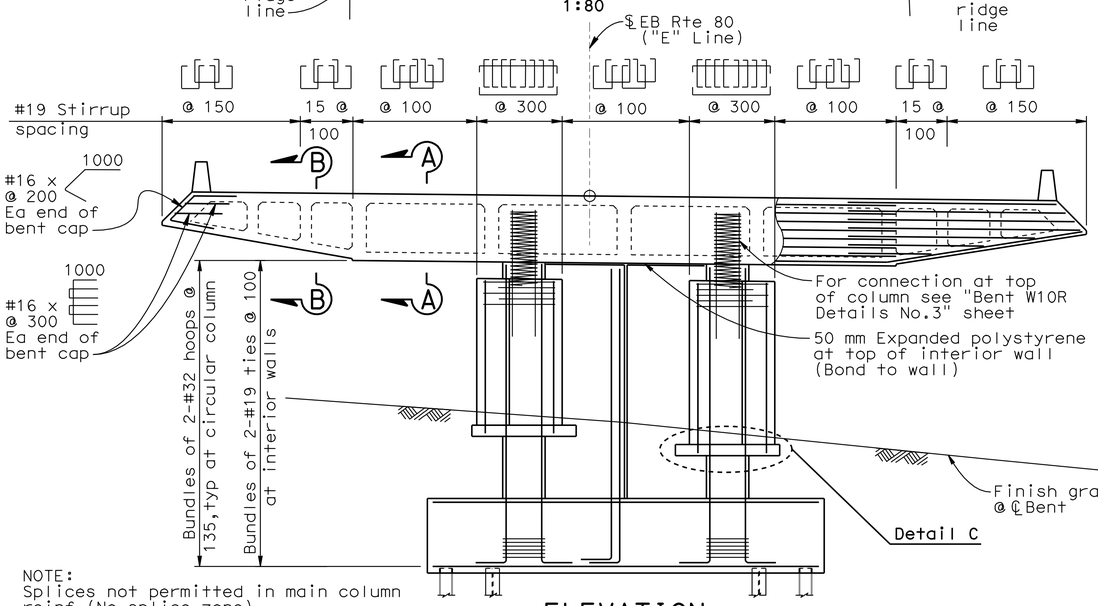

Note: For Sections A-A & B-B see "Bent W10R Details No.2" sheet

NOTE:
Splices not permitted in main column reinf (No splice zone).

ELEVATION
1:80

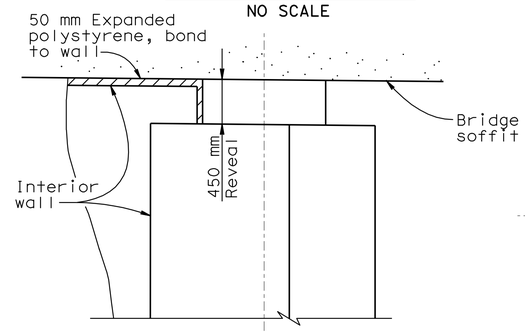

ELEVATION

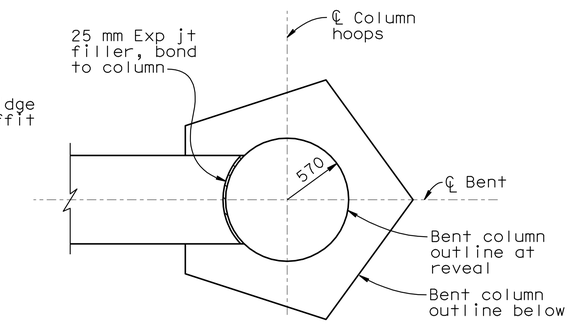

PLAN

REVEAL DETAIL AT TOP OF COLUMN
NO SCALE

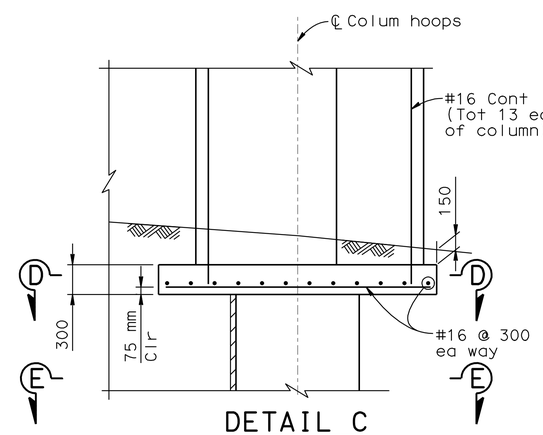

DETAIL C
1:30

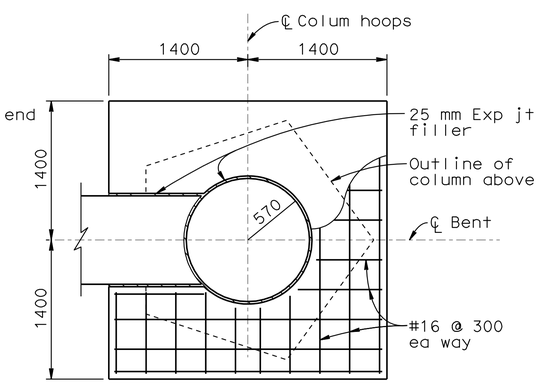

SECTION D-D
1:30

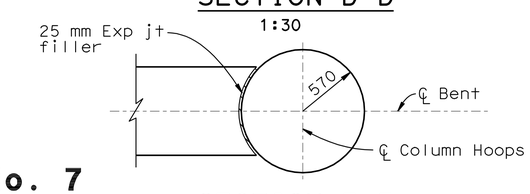

SECTION E-E
1:30

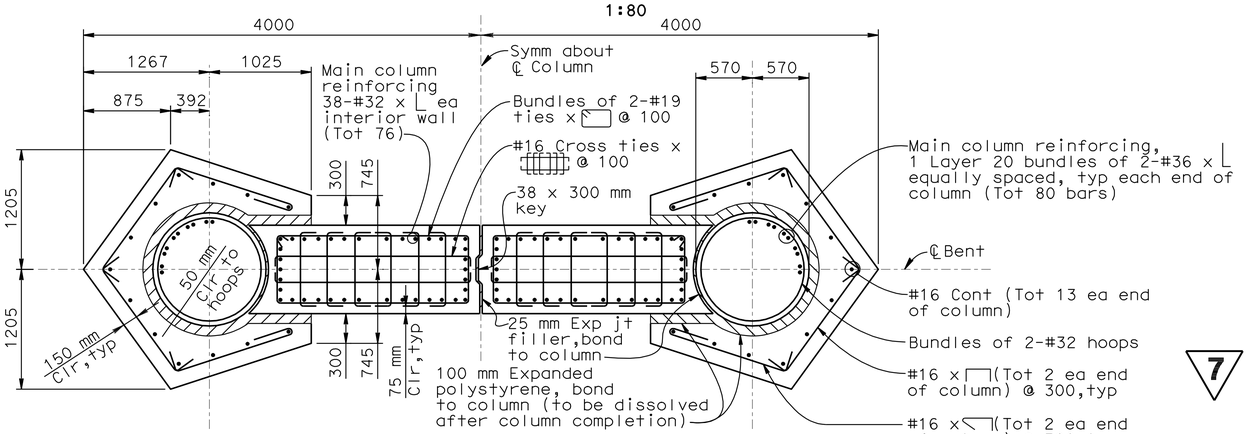

TYPICAL COLUMN SECTION
1:30

7 **REVISED PER ADDENDUM No. 7 DATED OCTOBER 19, 2009**

ALL DIMENSIONS ARE IN MILLIMETERS UNLESS OTHERWISE SHOWN

DESIGN OVERSIGHT
JOHN MOOK, BERNARD CHAN, JUAN F. CARPIO
March 3, 2008
SIGN OFF DATE

Rev. Date: 5-18-98

	BY	CHECKED
DESIGN	Darrah/Shangkuan	Ahn
DETAILS	van Ryn/Zucchi/Mai	Jain
QUANTITIES	Liao	E. Nichol

PREPARED FOR THE STATE OF CALIFORNIA DEPARTMENT OF TRANSPORTATION

Jal Birdy
PROJECT ENGINEER

BRIDGE NO. 34-0006 L/R
KILOMETER POST 12.8

SAN FRANCISCO OAKLAND BAY BRIDGE
EAST SPAN SEISMIC SAFETY PROJECT

YBI TRANSITION STRUCTURES

BENT W10R DETAILS NO.1

ORIGINAL SCALE IN MILLIMETERS FOR REDUCED PLANS 0 10 20 30 40 50 60 70 80 90 100

CU 04251
EA 0120S1

DISREGARD PRINTS BEARING EARLIER REVISION DATES

REVISION DATES (PRELIMINARY STAGE ONLY): 9/13/07 01/31/08 3/3/08 8/28/09 9/29/09 2/14/03 7/3/06 10/2/06 1/24/07 6/25/07

SHEET 48 OF 209

FILE => 04-0120s1-34-006rl-h-bdet31.add

Sept 29, 2009

USERNAME => trmikesl DATE PLOTTED => 15-OCT-2009 TIME PLOTTED => 10:52

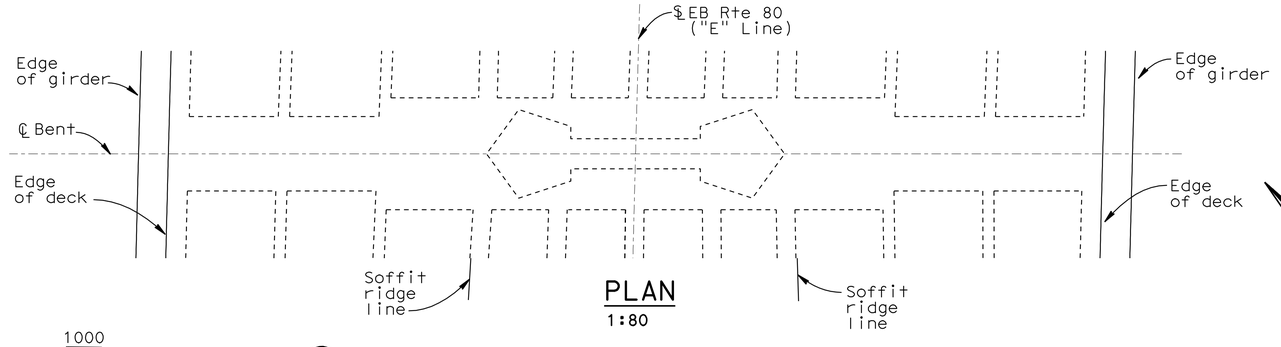

PLAN
1:80

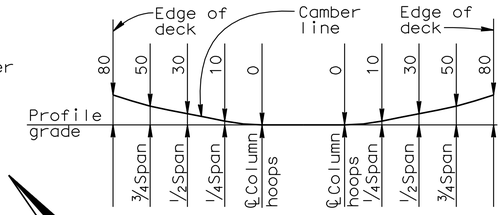

BENT CAP
CAMBER DIAGRAM
NO SCALE

Note: Camber diagram does not include allowance for falsework settlement

DIST.	COUNTY	ROUTE	KILOMETER POST TOTAL PROJECT	SHEET NO.	TOTAL SHEETS
04	SF	80	12.7/13.2	604	806

REGISTERED ENGINEER - CIVIL

6-23-08
PLANS APPROVAL DATE

REGISTERED PROFESSIONAL ENGINEER A.L. ELY No. 18880 Exp. 6-30-09 CIVIL STATE OF CALIFORNIA

The State of California or its officers or agents shall not be responsible for the accuracy or completeness of electronic copies of this plan sheet.

T.Y. LIN / MOFFATT & NICHOL
TWO HARRISON STREET
SAN FRANCISCO, CA 94105

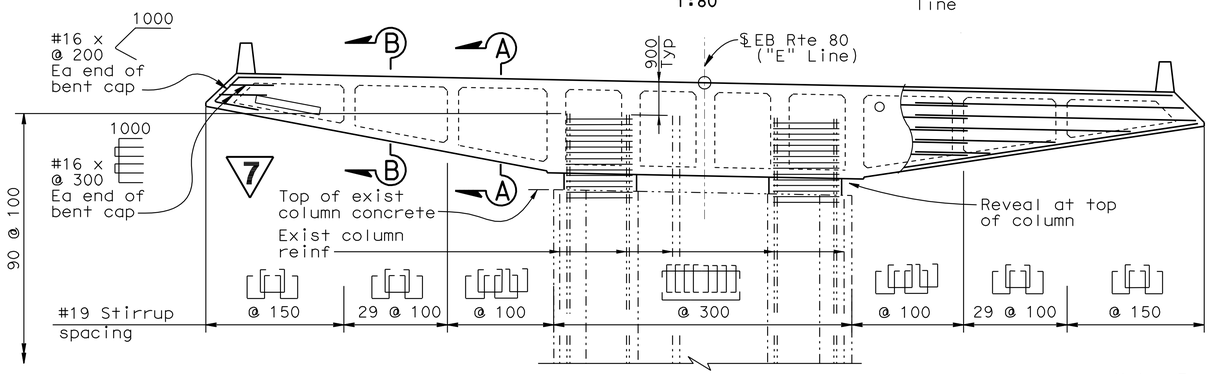

ELEVATION
1:80

Note: For Sections A-A & B-B see "Bent W7R Details No.2" sheet

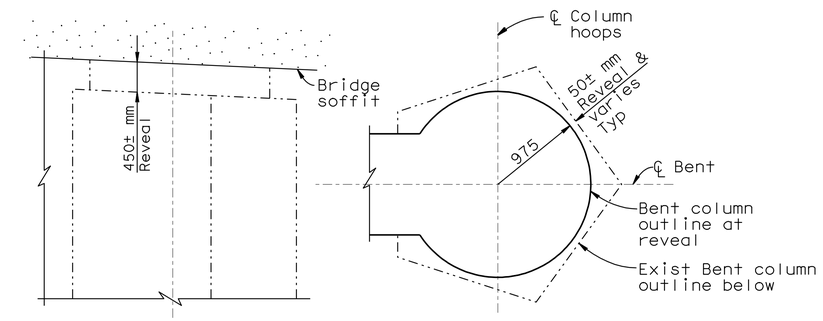

ELEVATION **PLAN**

REVEAL DETAIL AT TOP OF COLUMN
NO SCALE

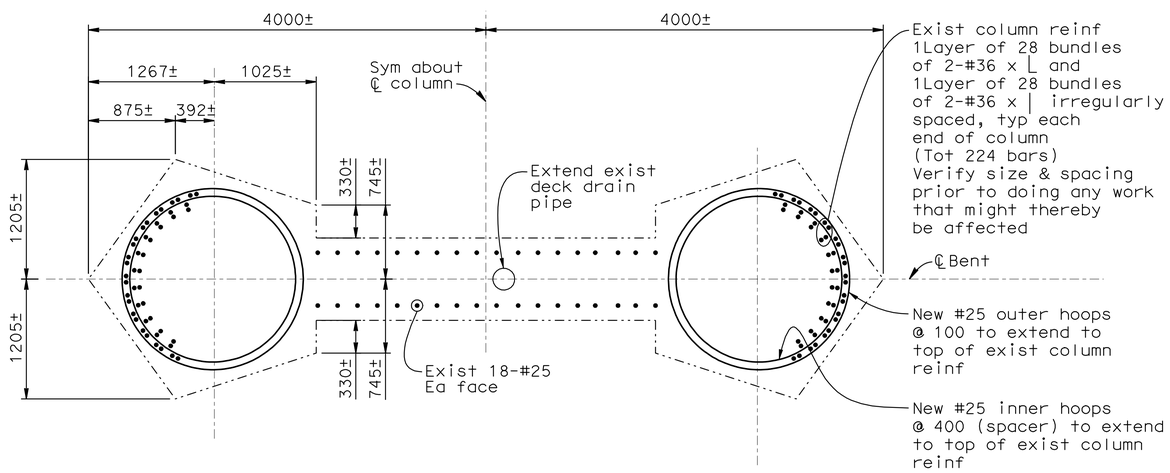

SECTION AT TOP OF COLUMN
1:30

7 REVISED PER ADDENDUM No. 7 DATED OCTOBER 19, 2009

ALL DIMENSIONS ARE IN MILLIMETERS UNLESS OTHERWISE SHOWN

DESIGN OVERSIGHT
JOHN MOOK, BERNARD CHAN, JUAN F. CARPIO
March 3, 2008
SIGN OFF DATE

Rev. Date: 5-18-98

	BY	CHECKED
DESIGN	Darrah/Shangkuan	Ahn
DETAILS	van Ryn/Zucchi/Mai	Jain
QUANTITIES	Liao	E. Nichol

ORIGINAL SCALE IN MILLIMETERS FOR REDUCED PLANS 0 10 20 30 40 50 60 70 80 90 100

PREPARED FOR THE STATE OF CALIFORNIA DEPARTMENT OF TRANSPORTATION

Jal Birdy
PROJECT ENGINEER

CU 04251
EA 0120S1

BRIDGE NO. 34-0006 L/R
KILOMETER POST 12.8

SAN FRANCISCO OAKLAND BAY BRIDGE
EAST SPAN SEISMIC SAFETY PROJECT

YBI TRANSITION STRUCTURES
BENT W7R DETAILS NO.1

DISREGARD PRINTS BEARING EARLIER REVISION DATES

REVISION DATES (PRELIMINARY STAGE ONLY) 9/13/07 01/31/08 3/31/08 8/28/09 9/29/09 2/14/03 3/3/06 10/2/06 1/24/07 6/25/07

SHEET 55 OF 209

FILE => 04-0120s1-34-006r1-h-bdet38.add

Sept 29, 2009

USERNAME => trmikest DATE PLOTTED => 15-OCT-2009 TIME PLOTTED => 10:53

DIST.	COUNTY	ROUTE	KILOMETER POST TOTAL PROJECT	SHEET NO.	TOTAL SHEETS
04	SF	80	12.7/13.2	605	806

REGISTERED ENGINEER - CIVIL

6-23-08
PLANS APPROVAL DATE

REGISTERED PROFESSIONAL ENGINEER A.L. ELY No. 18880 Exp. 6-30-09 CIVIL STATE OF CALIFORNIA

The State of California or its officers or agents shall not be responsible for the accuracy or completeness of electronic copies of this plan sheet.

T.Y. LIN / MOFFATT & NICHOL
TWO HARRISON STREET
SAN FRANCISCO, CA 94105

Caltrans Metric

7

Note:

Indicates bundled bars

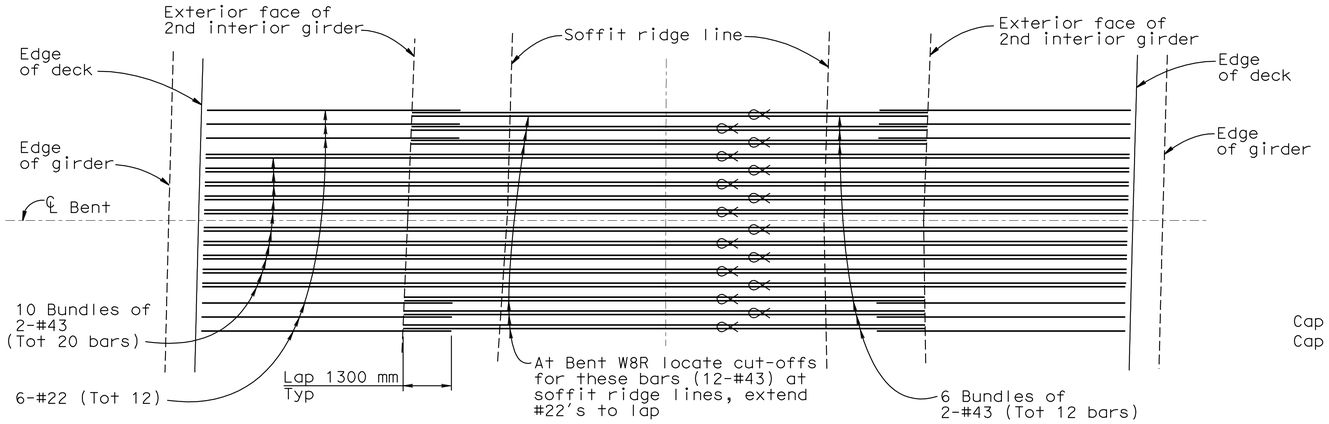

SCHEMATIC PLAN - CAP TOP UPPER LAYER REINFORCEMENT

No scale

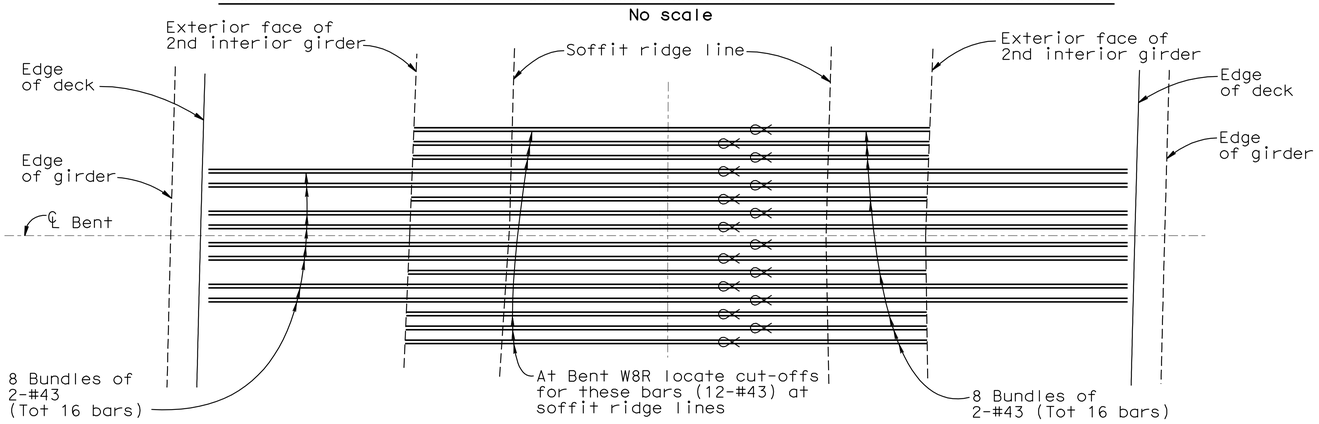

SCHEMATIC PLAN - CAP TOP LOWER LAYER REINFORCEMENT

No scale

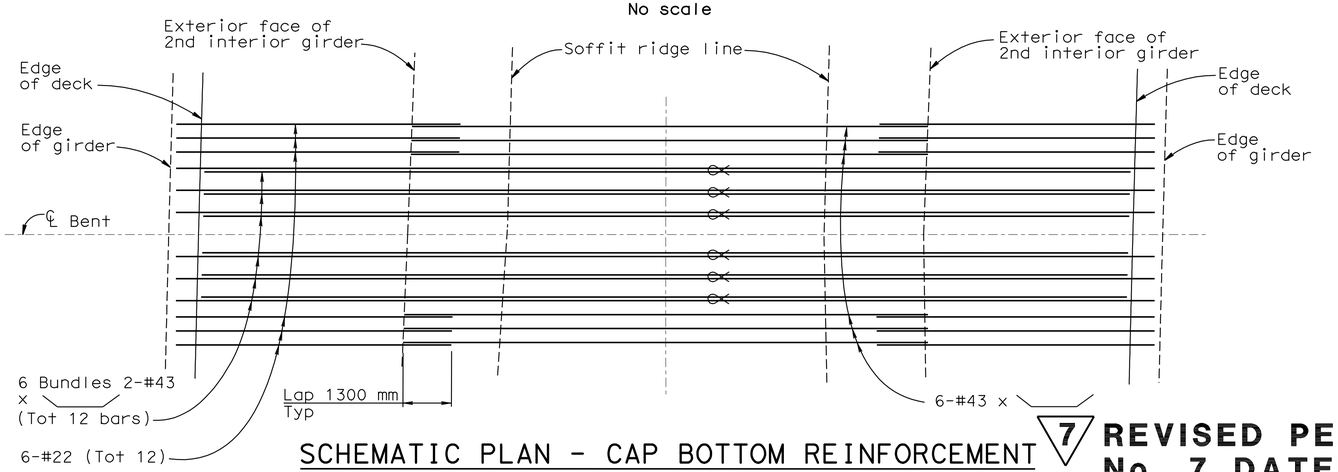

SCHEMATIC PLAN - CAP BOTTOM REINFORCEMENT

No scale

7 **REVISED PER ADDENDUM No. 7 DATED OCTOBER 19, 2009**

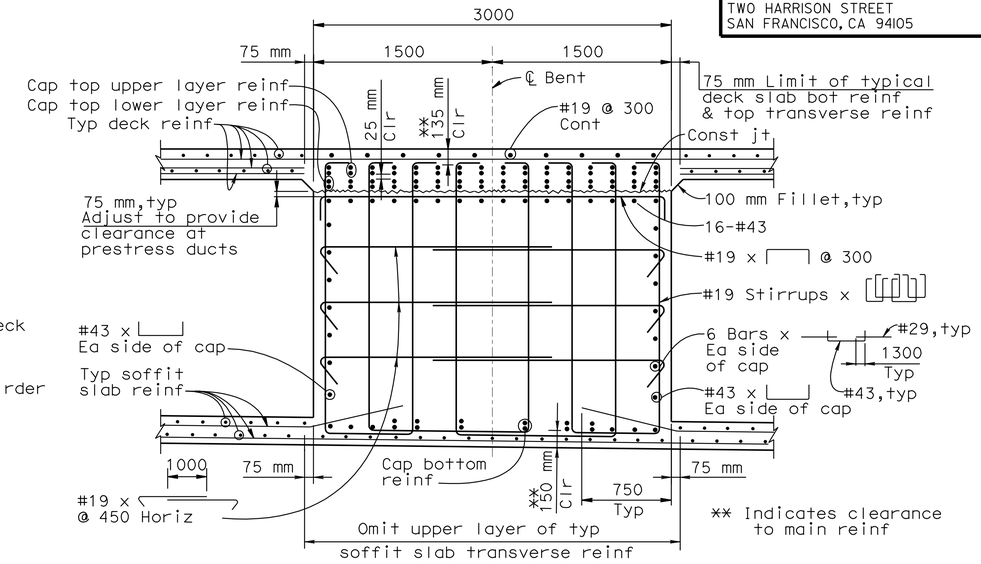

SECTION A-A

1:25

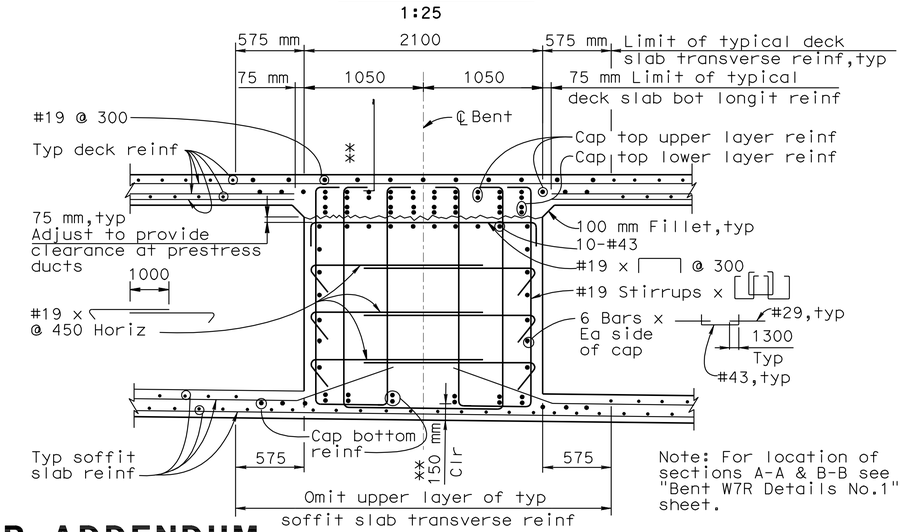

Note: For location of sections A-A & B-B see "Bent W7R Details No.1" sheet.

SECTION B-B

1:25

ALL DIMENSIONS ARE IN MILLIMETERS UNLESS OTHERWISE SHOWN

DESIGN OVERSIGHT
JOHN MOOK, BERNARD CHAN, JUAN F. CARPIO
March 3, 2008
SIGN OFF DATE

Rev. Date: 5-18-98

	BY	CHECKED
DESIGN	Wang	Greer
DETAILS	van Ryn/Zucchi/Mai	Jain
QUANTITIES	Liao	E. Nichol

ORIGINAL SCALE IN MILLIMETERS FOR REDUCED PLANS 0 10 20 30 40 50 60 70 80 90 100

PREPARED FOR THE STATE OF CALIFORNIA DEPARTMENT OF TRANSPORTATION

Jal Birdy
PROJECT ENGINEER

BRIDGE NO. 34-0006 L/R
KILOMETER POST 12.8

CU 04251
EA 0120S1

DISREGARD PRINTS BEARING EARLIER REVISION DATES

REVISION DATES (PRELIMINARY STAGE ONLY): 9/13/07 01/24/08 3/3/08 5/22/09 8/28/09 9/29/09 7/3/06 10/4/06 1/24/07 6/28/07

SHEET 56 OF 209

SAN FRANCISCO OAKLAND BAY BRIDGE
EAST SPAN SEISMIC SAFETY PROJECT

YBI TRANSITION STRUCTURES

BENT W7R DETAILS NO.2

FILE => 04-0120s1-34-006r1-h-bdet39.add

Sept 29, 2009

USERNAME => trmikest DATE PLOTTED => 15-OCT-2009 TIME PLOTTED => 10:53

DIST.	COUNTY	ROUTE	KILOMETER POST TOTAL PROJECT	SHEET NO.	TOTAL SHEETS
04	SF	80	12.7/13.2	606	806

Caltrans Metric

REGISTERED ENGINEER - CIVIL

6-23-08
PLANS APPROVAL DATE

REGISTERED PROFESSIONAL ENGINEER A.L. ELY No. 18880 Exp. 6-30-09 CIVIL STATE OF CALIFORNIA

The State of California or its officers or agents shall not be responsible for the accuracy or completeness of electronic copies of this plan sheet.

T.Y. LIN / MOFFATT & NICHOL
TWO HARRISON STREET
SAN FRANCISCO, CA 94105

7

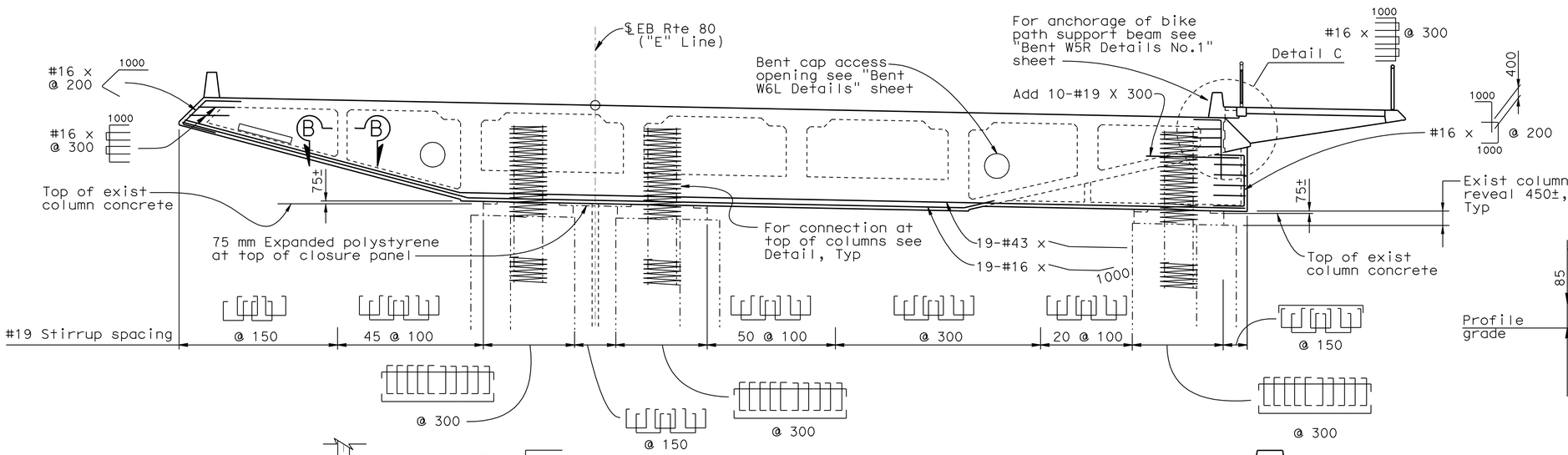

ELEVATION
1:80

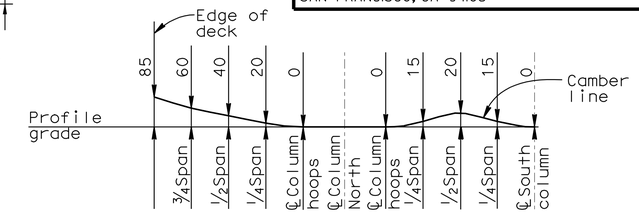

BENT CAP
CAMBER DIAGRAM
NO SCALE

Note: Camber diagram does not include allowance for falsework settlement

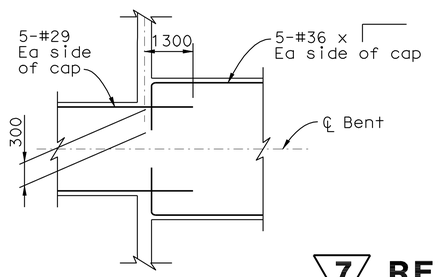

SECTION B-B
1:80

7 REVISED PER ADDENDUM No. 7
DATED OCTOBER 19, 2009

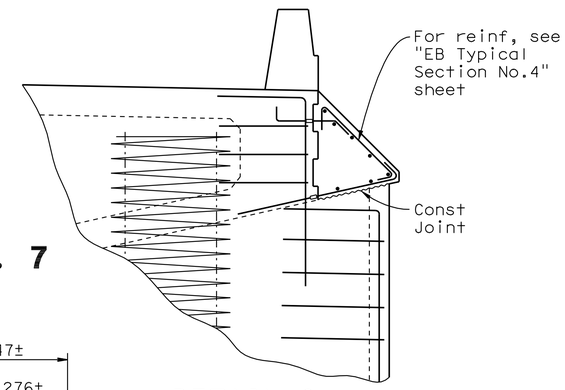

DETAIL C
1:30

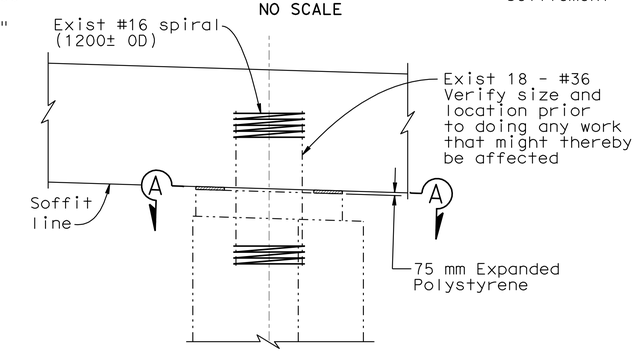

ELEVATION

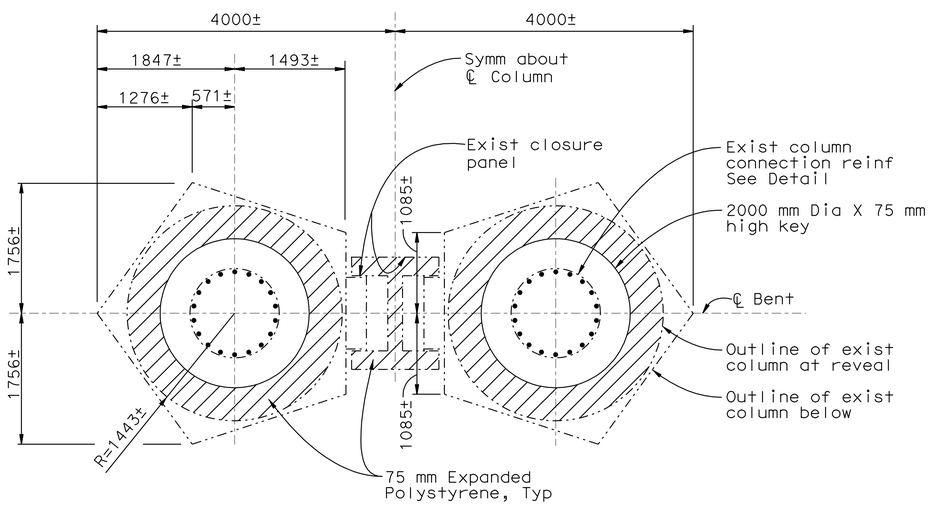

PLAN AT TOP OF NORTH COLUMN
1:40

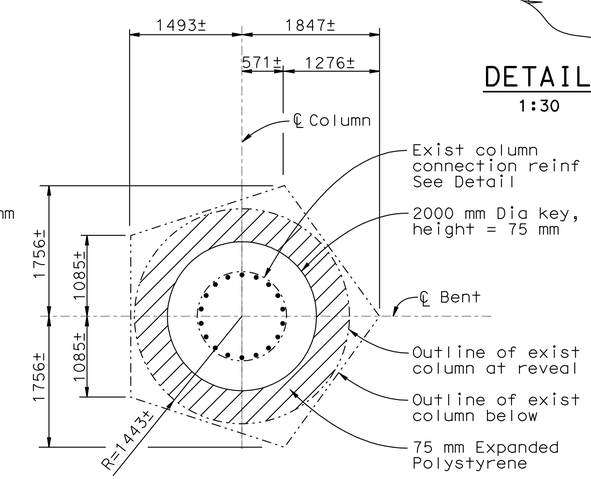

PLAN AT TOP OF SOUTH COLUMN
1:40

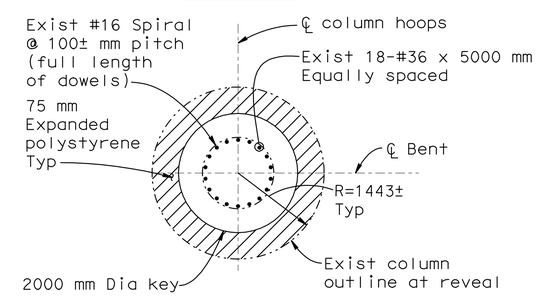

SECTION A-A
CONNECTION DETAIL AT TOP OF COLUMNS
(South column shown, north column similar)
1:50

ALL DIMENSIONS ARE IN MILLIMETERS UNLESS OTHERWISE SHOWN

DESIGN OVERSIGHT
JOHN MOOK, BERNARD CHAN, JUAN F. CARPIO
March 3, 2008
SIGN OFF DATE

Rev. Date: 5-18-98

	BY	CHECKED
DESIGN	Darrah/Shangkuan	Ahn
DETAILS	van Ryn/Zucchi/Mai	Jain
QUANTITIES	Liao	E. Nichol

PREPARED FOR THE STATE OF CALIFORNIA DEPARTMENT OF TRANSPORTATION

Jal Birdy
PROJECT ENGINEER

CU 04251
EA 0120S1

ORIGINAL SCALE IN MILLIMETERS FOR REDUCED PLANS 0 10 20 30 40 50 60 70 80 90 100

BRIDGE NO. 34-0006 L/R
KILOMETER POST 12.8

DISREGARD PRINTS BEARING EARLIER REVISION DATES

SAN FRANCISCO OAKLAND BAY BRIDGE
EAST SPAN SEISMIC SAFETY PROJECT

YBI TRANSITION STRUCTURES

BENT W6R DETAILS NO.1

REVISION DATES (PRELIMINARY STAGE ONLY) 9/13/07 01/31/08 3/3/08 8/28/09 9/29/09 2/14/05 7/3/06 10/2/06 1/24/07 6/25/07

SHEET 57 OF 209

FILE => 04-0120s1-34-006rl-h-bdet40.add

Sept 29, 2009

USERNAME => trmikes1 DATE PLOTTED => 15-OCT-2009 TIME PLOTTED => 10:53

DIST.	COUNTY	ROUTE	KILOMETER POST TOTAL PROJECT	SHEET NO.	TOTAL SHEETS
04	SF	80	12.7/13.2	607	806

REGISTERED ENGINEER - CIVIL

6-23-08
PLANS APPROVAL DATE

REGISTERED PROFESSIONAL ENGINEER A.L. ELY No. 18880 Exp. 6-30-09 CIVIL STATE OF CALIFORNIA

The State of California or its officers or agents shall not be responsible for the accuracy or completeness of electronic copies of this plan sheet.

T.Y. LIN / MOFFATT & NICHOL
TWO HARRISON STREET
SAN FRANCISCO, CA 94105

Caltrans Metric

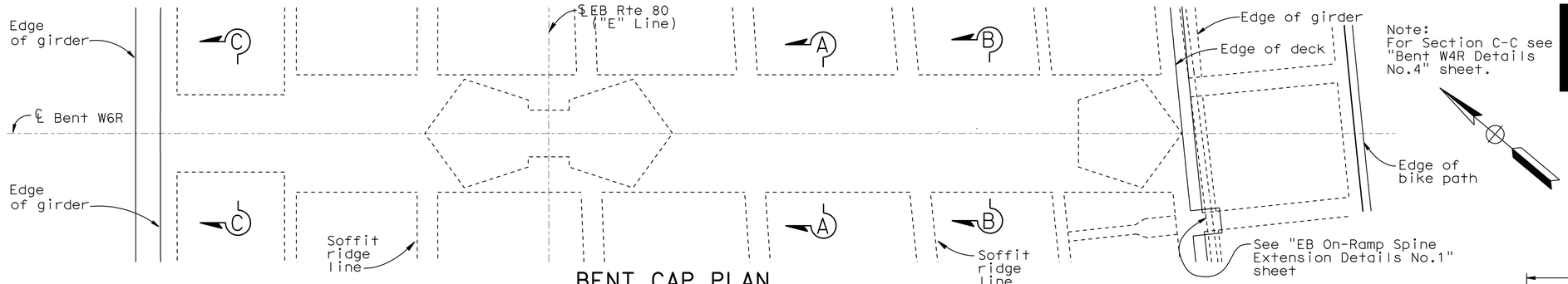

Note: For Section C-C see "Bent W4R Details No.4" sheet.

BENT CAP PLAN
1:80

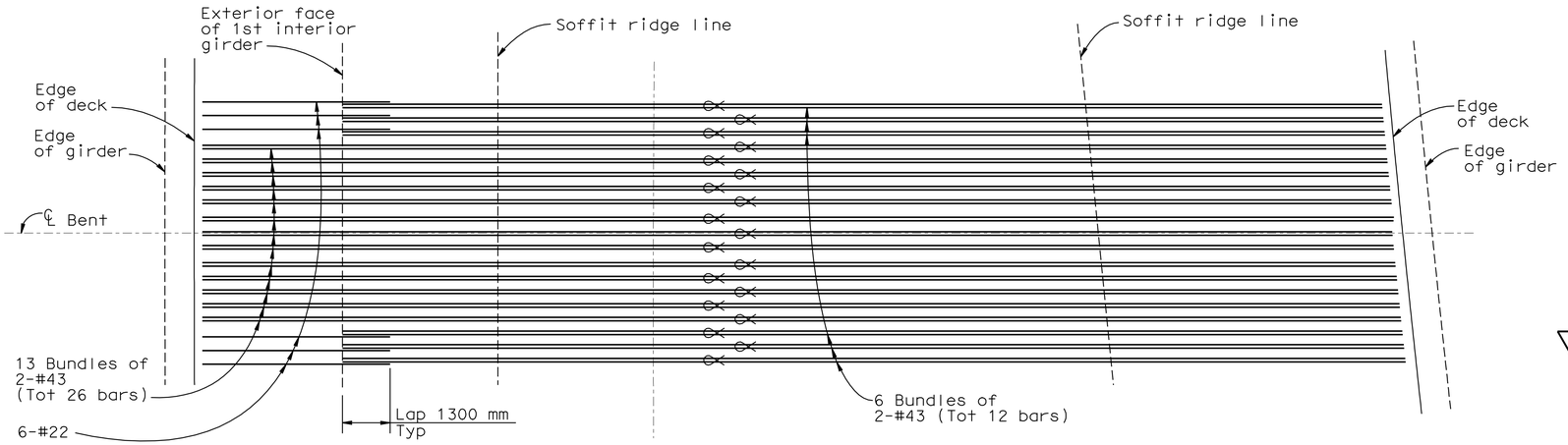

SCHEMATIC PLAN - CAP TOP UPPER LAYER REINFORCEMENT
No scale

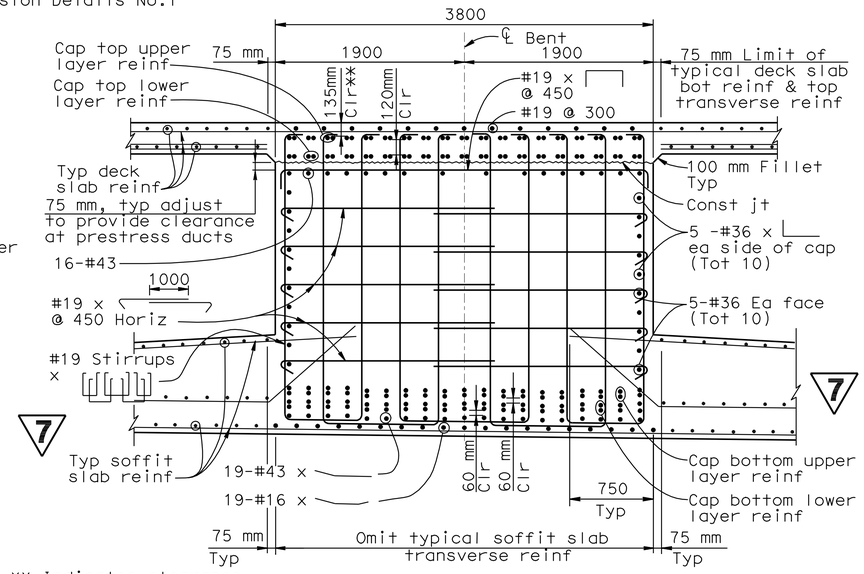

** Indicates clearance to main reinf

SECTION A-A
1:30

Note: ⊸ Indicates bundled bars

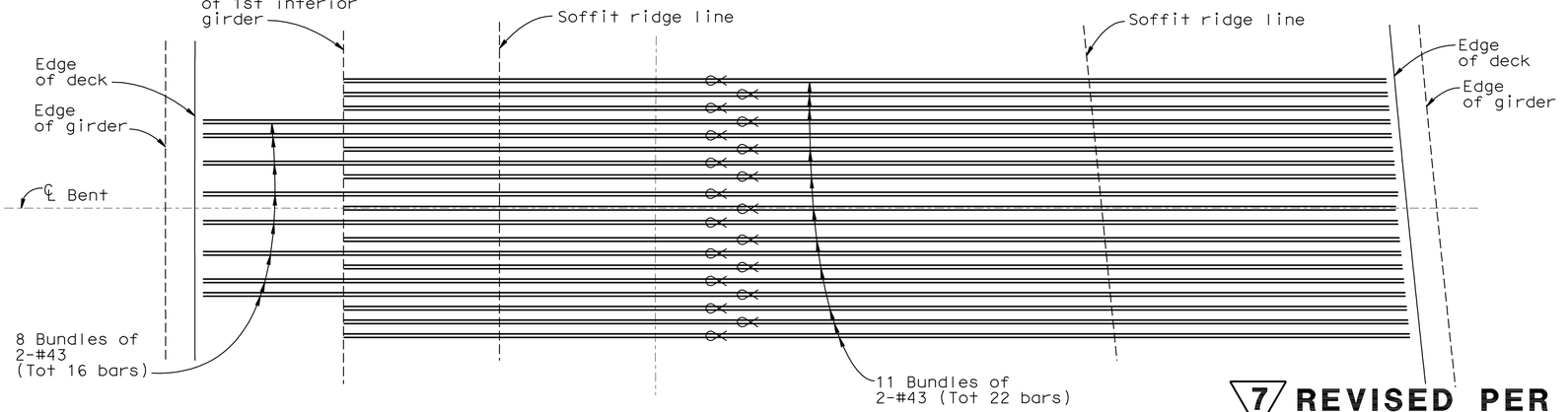

SCHEMATIC PLAN - CAP TOP LOWER LAYER REINFORCEMENT
No scale

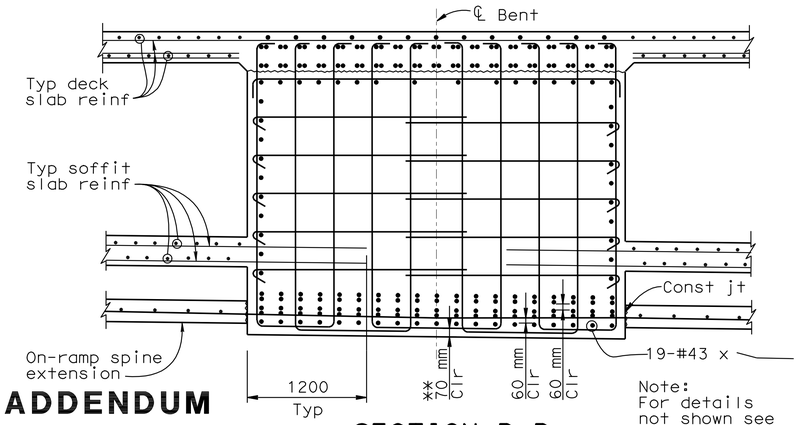

Note: For details not shown see "Section A-A"

SECTION B-B
1:30

7 REVISED PER ADDENDUM No. 7 DATED OCTOBER 19, 2009

Note: Lap splices not permitted in bent cap main top and bottom reinf

ALL DIMENSIONS ARE IN MILLIMETERS UNLESS OTHERWISE SHOWN

DESIGN OVERSIGHT
JOHN MOOK, BERNARD CHAN, JUAN F. CARPIO
March 3, 2008
SIGN OFF DATE

Rev. Date: 5-18-98

	BY	CHECKED
DESIGN	Wang	Greer
DETAILS	van Ryn/Zucchi/Mai	Jain
QUANTITIES	Liao	E. Nichol

ORIGINAL SCALE IN MILLIMETERS FOR REDUCED PLANS 0 10 20 30 40 50 60 70 80 90 100

PREPARED FOR THE STATE OF CALIFORNIA DEPARTMENT OF TRANSPORTATION

Jal Birdy
PROJECT ENGINEER

CU 04251
EA 0120S1

BRIDGE NO. 34-0006 L/R
KILOMETER POST 12.8

DISREGARD PRINTS BEARING EARLIER REVISION DATES

REVISION DATES (PRELIMINARY STAGE ONLY): 9/13/07 01/31/08 3/3/08 8/28/09 9/29/09 2/14/05 7/3/06 10/2/06 1/24/07 6/25/07

SHEET 58 OF 209

SAN FRANCISCO OAKLAND BAY BRIDGE
EAST SPAN SEISMIC SAFETY PROJECT

YBI TRANSITION STRUCTURES

BENT W6R DETAILS NO.2

FILE => 04-0120s1-34-006rl-h-bdet41.add

Sept 29, 2009

USERNAME => trmikes1 DATE PLOTTED => 15-OCT-2009 TIME PLOTTED => 10:53

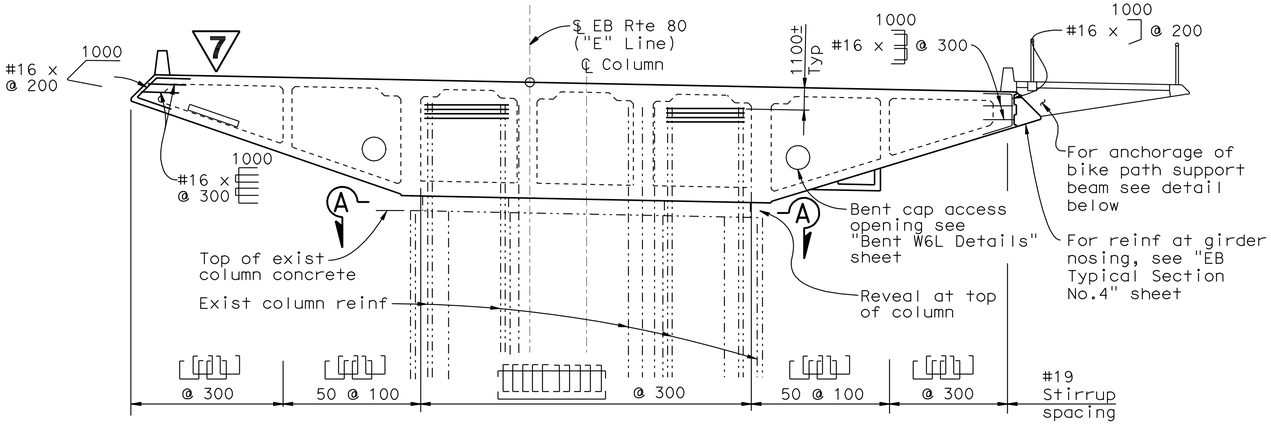

ELEVATION
1:100

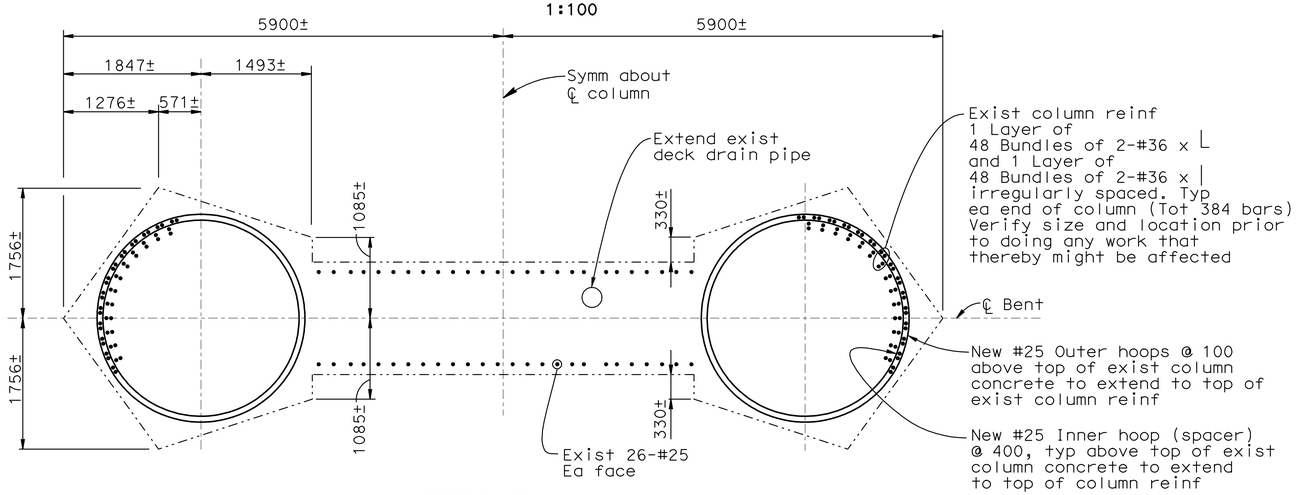

SECTION A-A
1:40

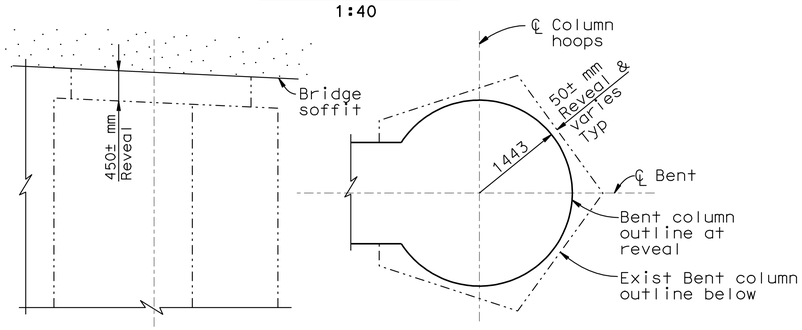

ELEVATION PLAN

REVEAL DETAIL AT TOP OF COLUMN
(Typical Bents W5R & W4R)
NO SCALE

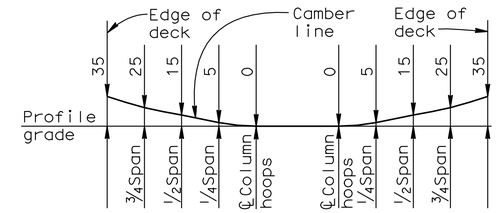

BENT CAP CAMBER DIAGRAM
NO SCALE

Note: Camber diagram does not include allowance for falsework settlement

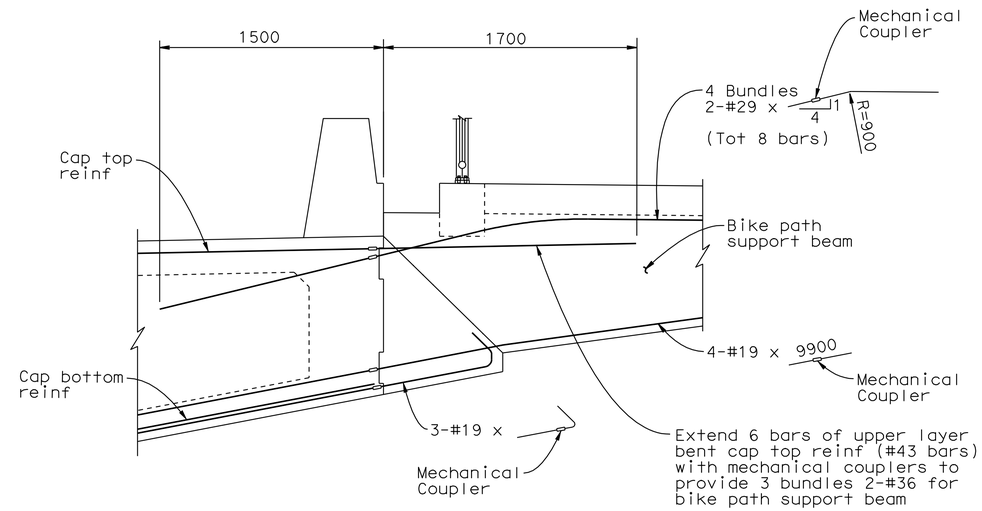

ANCHORAGE OF BIKEPATH SUPPORT BEAM
(Shown at Bent W5R, similar at Bent W6R, for details not shown see "Bike Path Details No.1" sheet)
1:20

7 **REVISED PER ADDENDUM No. 7 DATED OCTOBER 19, 2009**

ALL DIMENSIONS ARE IN MILLIMETERS UNLESS OTHERWISE SHOWN

DIST.	COUNTY	ROUTE	KILOMETER POST TOTAL PROJECT	SHEET NO.	TOTAL SHEETS
04	SF	80	12.7/13.2	609	806

Caltrans Metric

REGISTERED ENGINEER - CIVIL
6-23-08
PLANS APPROVAL DATE
REGISTERED PROFESSIONAL ENGINEER A.L. ELY No. 18880 Exp. 6-30-09 CIVIL STATE OF CALIFORNIA

The State of California or its officers or agents shall not be responsible for the accuracy or completeness of electronic copies of this plan sheet.

T.Y. LIN / MOFFATT & NICHOL
TWO HARRISON STREET
SAN FRANCISCO, CA 94105

DESIGN OVERSIGHT
JOHN MOOK, BERNARD CHAN, JUAN F. CARPIO
March 3, 2008
SIGN OFF DATE

Rev. Date: 5-18-98

	BY	CHECKED
DESIGN	Darrah/Shangkuan	Ahn
DETAILS	van Ryn/Zucchi/Mai	Jain
QUANTITIES	Liao	E. Nichol

ORIGINAL SCALE IN MILLIMETERS FOR REDUCED PLANS 0 10 20 30 40 50 60 70 80 90 100

PREPARED FOR THE STATE OF CALIFORNIA DEPARTMENT OF TRANSPORTATION

Jal Birdy
PROJECT ENGINEER

CU 04251
EA 0120S1

BRIDGE NO. 34-0006 L/R
KILOMETER POST 12.8

DISREGARD PRINTS BEARING EARLIER REVISION DATES

REVISION DATES (PRELIMINARY STAGE ONLY): 9/13/07 01/31/08 3/14/08 8/28/09 9/29/09 2/14/05 7/3/06 10/2/06 1/24/07 6/25/07

SHEET 60 OF 209

SAN FRANCISCO OAKLAND BAY BRIDGE
EAST SPAN SEISMIC SAFETY PROJECT

YBI TRANSITION STRUCTURES
BENT W5R DETAILS NO.1

FILE => 04-0120s1-34-006r1-h-bdet43.add

Sept 29, 2009

USERNAME => trmikes1 DATE PLOTTED => 15-OCT-2009 TIME PLOTTED => 10:54

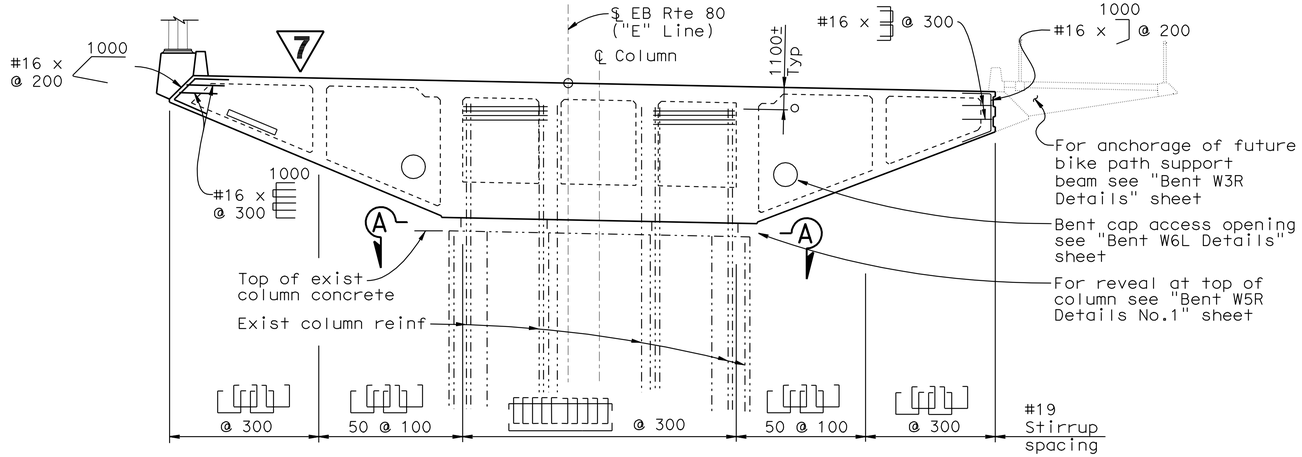

ELEVATION
1:100

Note: For bent cap details see "Bent W5R Details No.2" sheet

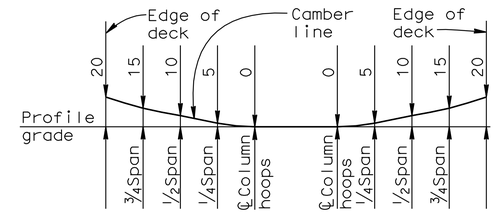

BENT CAP CAMBER DIAGRAM
NO SCALE

Note: Camber diagram does not include allowance for falsework settlement

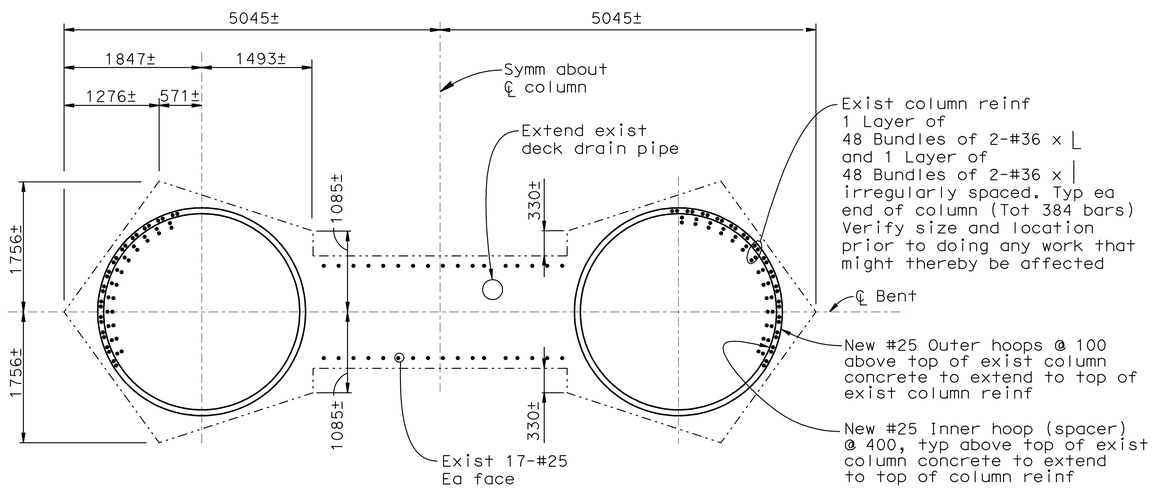

SECTION A-A
1:40

7 REVISED PER ADDENDUM No. 7 DATED OCTOBER 19, 2009

DIST.	COUNTY	ROUTE	KILOMETER POST TOTAL PROJECT	SHEET NO.	TOTAL SHEETS
04	SF	80	12.7/13.2	611	806

REGISTERED ENGINEER - CIVIL
6-23-08
PLANS APPROVAL DATE

REGISTERED PROFESSIONAL ENGINEER A.L. ELY No. 18880 Exp. 6-30-09 CIVIL STATE OF CALIFORNIA

The State of California or its officers or agents shall not be responsible for the accuracy or completeness of electronic copies of this plan sheet.

T.Y. LIN / MOFFATT & NICHOL
TWO HARRISON STREET
SAN FRANCISCO, CA 94105

ALL DIMENSIONS ARE IN MILLIMETERS UNLESS OTHERWISE SHOWN

SAN FRANCISCO OAKLAND BAY BRIDGE
EAST SPAN SEISMIC SAFETY PROJECT

YBI TRANSITION STRUCTURES

BENT W4R DETAILS

DESIGN OVERSIGHT
JOHN MOOK, BERNARD CHAN, JUAN F. CARPIO
March 3, 2008
SIGN OFF DATE

Rev. Date: 5-18-98

	BY	CHECKED
DESIGN	Darrah/Shangkuan	Ahn
DETAILS	van Ryn/Zucchi/Mai	Jain
QUANTITIES	Liao	E. Nichol

ORIGINAL SCALE IN MILLIMETERS FOR REDUCED PLANS 0 10 20 30 40 50 60 70 80 90 100

PREPARED FOR THE STATE OF CALIFORNIA DEPARTMENT OF TRANSPORTATION

Jal Birdy
PROJECT ENGINEER

BRIDGE NO. 34-0006 L/R
KILOMETER POST 12.8

CU 04251
EA 0120S1

DISREGARD PRINTS BEARING EARLIER REVISION DATES

REVISION DATES (PRELIMINARY STAGE ONLY) 9/13/07 01/24/08 3/24/08 8/28/09 9/29/09 2/24/03 7/3/06 10/4/06 1/24/07 6/26/07

SHEET 62 OF 209

FILE => 04-0120s1-34-006rl-h-bdet45.add

Sept 29, 2009

USERNAME => tmikesi DATE PLOTTED => 15-OCT-2009 TIME PLOTTED => 10:54

DIST.	COUNTY	ROUTE	KILOMETER POST TOTAL PROJECT	SHEET NO.	TOTAL SHEETS
04	SF	80	12.7/13.2	612	806

REGISTERED ENGINEER - CIVIL
6-23-08
PLANS APPROVAL DATE

REGISTERED PROFESSIONAL ENGINEER A.L. ELY No. 18880 Exp. 6-30-09 CIVIL STATE OF CALIFORNIA

The State of California or its officers or agents shall not be responsible for the accuracy or completeness of electronic copies of this plan sheet.

T.Y. LIN / MOFFATT & NICHOL
TWO HARRISON STREET
SAN FRANCISCO, CA 94105

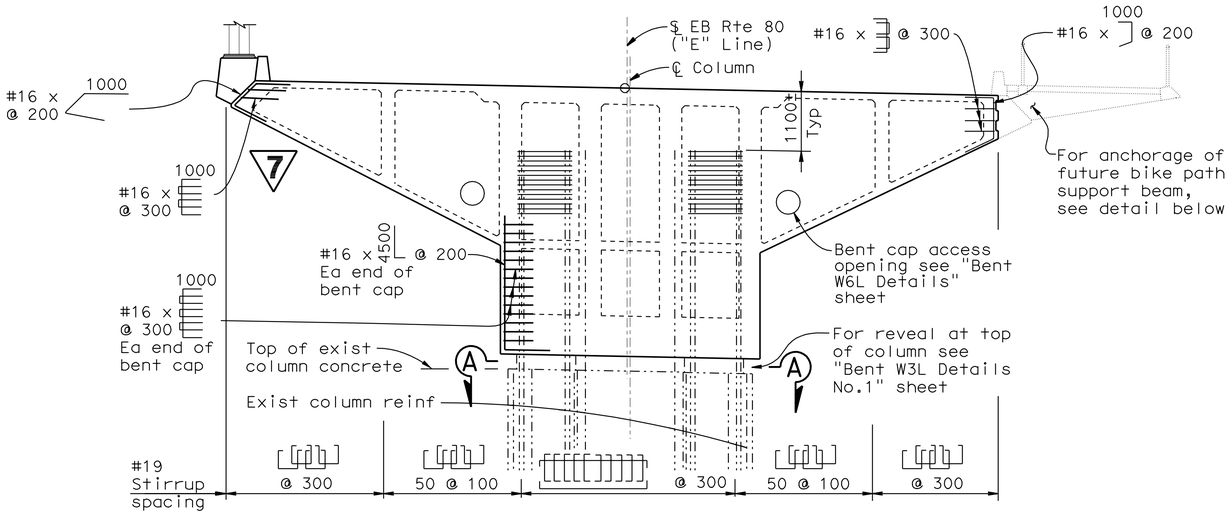

ELEVATION
1:100

Note: For bent cap details see "Bent W3L Details No.2" sheet

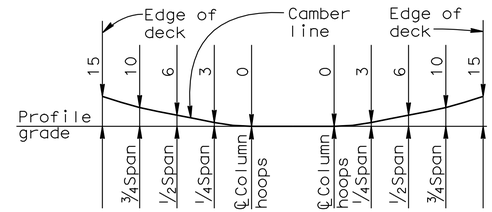

BENT CAP
CAMBER DIAGRAM
NO SCALE

Note: Camber diagram does not include allowance for falsework settlement

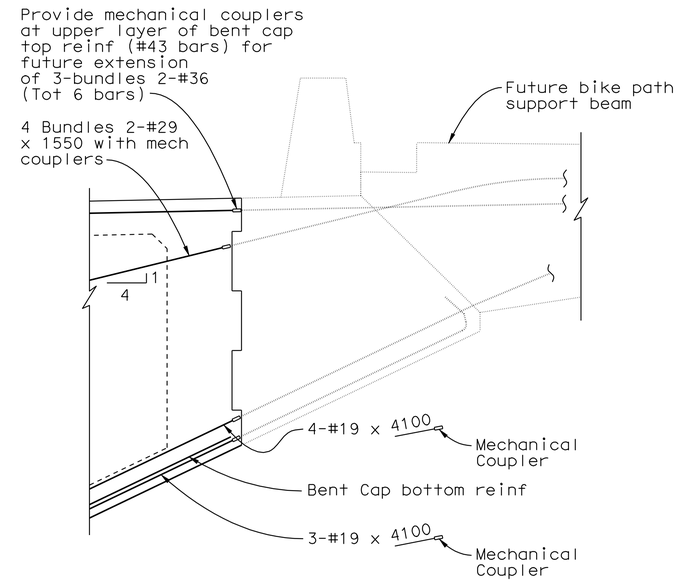

ANCHORAGE OF BIKEPATH SUPPORT BEAM
(Shown at Bent W3R, similar at Bent W4R, for details not shown see "Future Bike Path Details No.1" sheet)
1:20

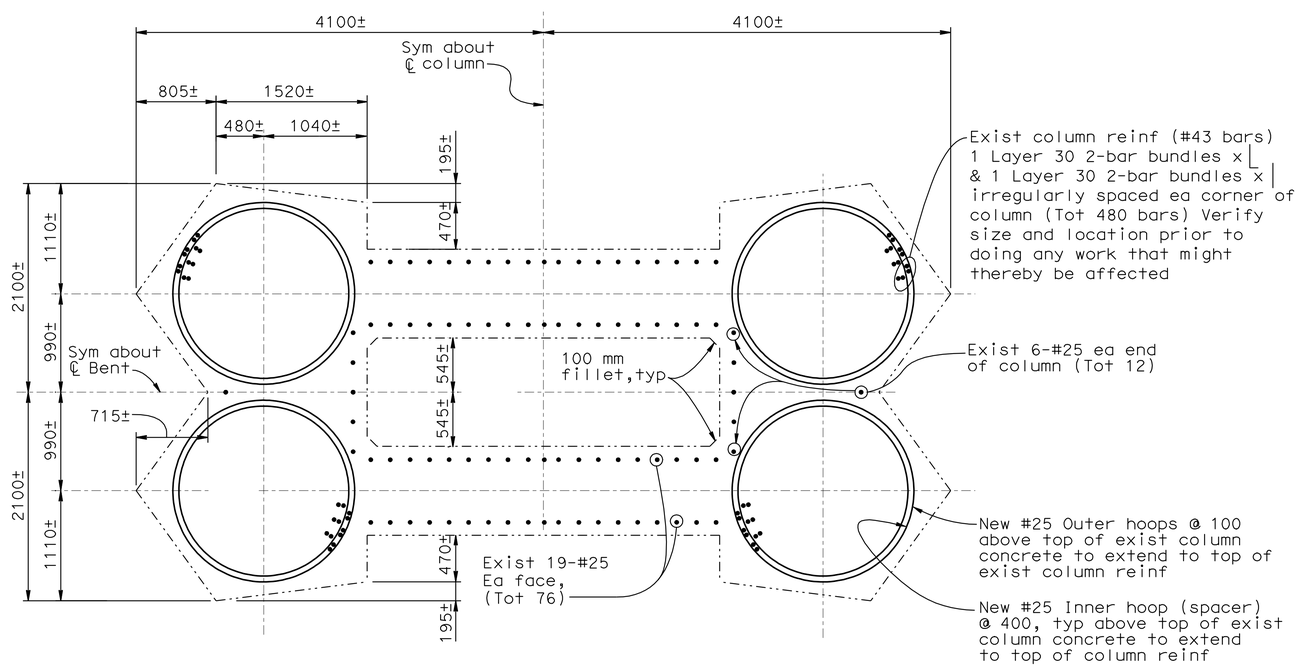

SECTION A-A
1:30

7 REVISED PER ADDENDUM No. 7 DATED OCTOBER 19, 2009

ALL DIMENSIONS ARE IN MILLIMETERS UNLESS OTHERWISE SHOWN

DESIGN OVERSIGHT
JOHN MOOK, BERNARD CHAN, JUAN F. CARPIO
March 3, 2008
SIGN OFF DATE

Rev. Date: 5-18-98

	BY	CHECKED
DESIGN	Darrah/Shangkuan	Ahn
DETAILS	van Ryn/Zucchi/Mai	Jain
QUANTITIES	Liao	E. Nichol

PREPARED FOR THE STATE OF CALIFORNIA DEPARTMENT OF TRANSPORTATION

Jal Birdy
PROJECT ENGINEER

BRIDGE NO. 34-0006 L/R
KILOMETER POST 12.8

SAN FRANCISCO OAKLAND BAY BRIDGE
EAST SPAN SEISMIC SAFETY PROJECT

YBI TRANSITION STRUCTURES
BENT W3R DETAILS

ORIGINAL SCALE IN MILLIMETERS FOR REDUCED PLANS 0 10 20 30 40 50 60 70 80 90 100

CU 04251
EA 0120S1

DISREGARD PRINTS BEARING EARLIER REVISION DATES

REVISION DATES (PRELIMINARY STAGE ONLY) 9/13/07 01/31/08 3/3/08 8/28/09 9/29/09 2/14/05 7/3/06 10/2/06 1/24/07 6/25/07

SHEET 63 OF 209

FILE => 04-0120s1-34-006rl-h-bdet46.add

Sept 29, 2009

USERNAME => trmikes1 DATE PLOTTED => 15-OCT-2009 TIME PLOTTED => 10:54

DIST.	COUNTY	ROUTE	KILOMETER POST TOTAL PROJECT	SHEET NO.	TOTAL SHEETS
04	SF	80	12.7/13.2	613	806

REGISTERED ENGINEER - CIVIL

6-23-08
PLANS APPROVAL DATE

REGISTERED PROFESSIONAL ENGINEER A.L. ELY No. 18880 Exp. 6-30-09 CIVIL STATE OF CALIFORNIA

The State of California or its officers or agents shall not be responsible for the accuracy or completeness of electronic copies of this plan sheet.

T.Y. LIN / MOFFATT & NICHOL
TWO HARRISON STREET
SAN FRANCISCO, CA 94105

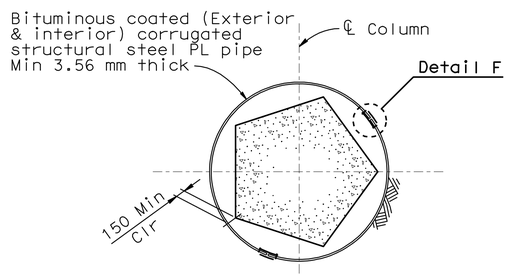

SECTION A-A

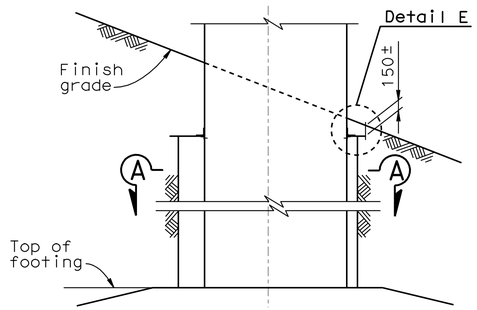

ELEVATION

ISOLATION SLEEVE
BENTS W9L,W8L & W9R
(South column at Bent W9L, north & south columns at Bents W8L & W9R)
1:60

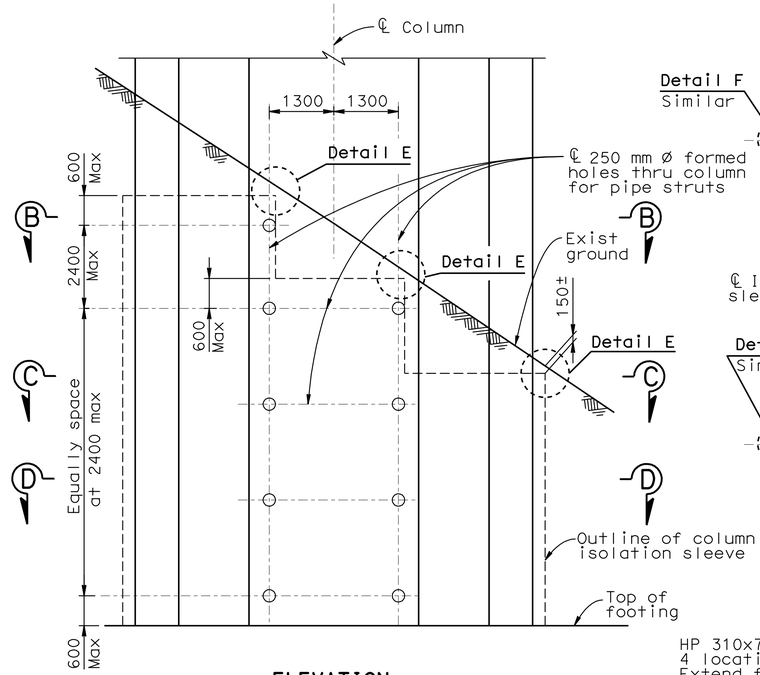

ELEVATION

ISOLATION SLEEVE BENT 8R
1:60

Note: Structural plates and shapes for column isolation sleeves to be galvanized and bituminous coated.

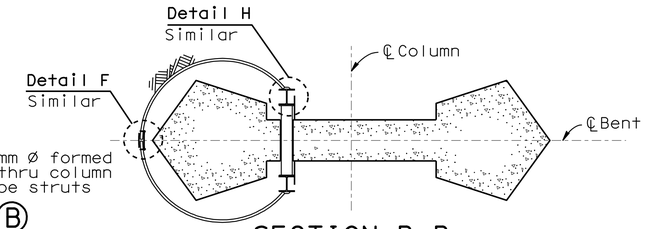

SECTION B-B
1:60

Note: For details not shown see Section D-D

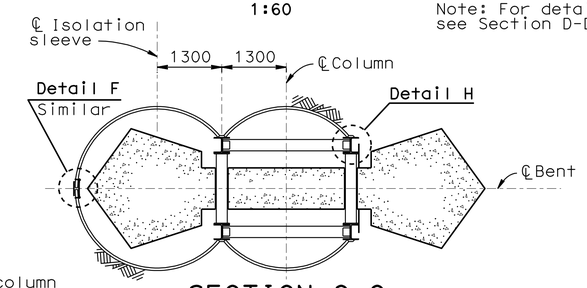

SECTION C-C
1:60

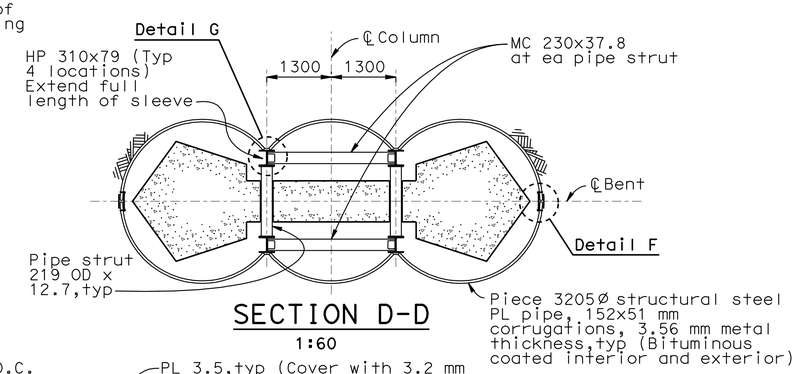

SECTION D-D
1:60

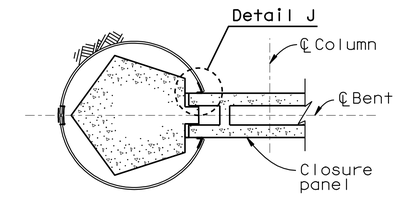

SECTION AT TOP OF ISOLATION SLEEVE - NORTH SIDE BENT W9R
1:60

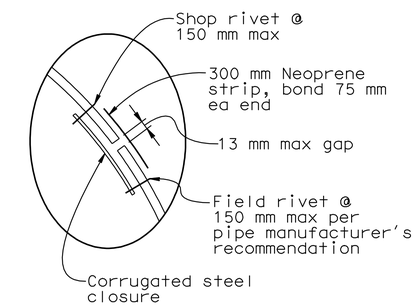

DETAIL F
No Scale

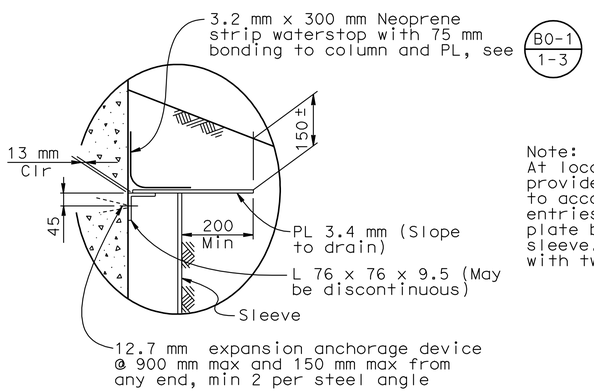

DETAIL E
No Scale

7

Note:
At locations where openings are provided thru isolation sleeve to accomodate electrical conduit entries, provide corrugated doubler plate both inside and outside of sleeve. Field rivet along perimeter with two rows of rivets at 150 OC.

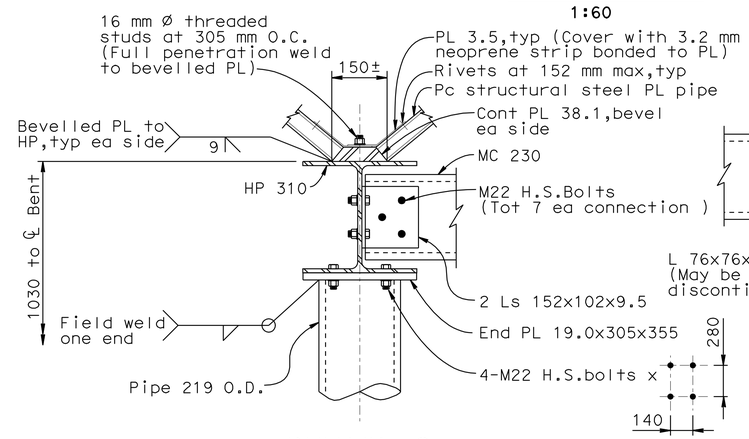

DETAIL G
1:8

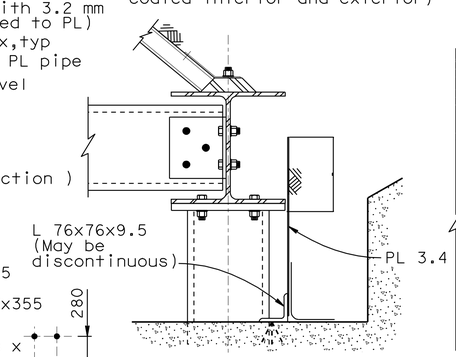

DETAIL H
1:8

Note: See Details E & G for details not shown

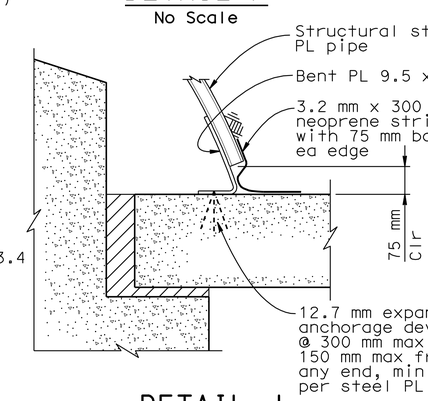

DETAIL J
1:8

7 **REVISED PER ADDENDUM No. 7 DATED OCTOBER 19, 2009**

ALL DIMENSIONS ARE IN MILLIMETERS UNLESS OTHERWISE SHOWN

DESIGN OVERSIGHT
JOHN MOOK, BERNARD CHAN, JUAN F. CARPIO
March 3, 2008
SIGN OFF DATE

Rev. Date: 5-18-98

	BY	CHECKED
DESIGN	Jain	Desai
DETAILS	van Ryn/Zucchi/Mai	Jain
QUANTITIES	Liao	E. Nichol

PREPARED FOR THE STATE OF CALIFORNIA DEPARTMENT OF TRANSPORTATION

Jal Birdy
PROJECT ENGINEER

CU 04251
EA 0120S1

BRIDGE NO. 34-0006 L/R
KILOMETER POST 12.8

SAN FRANCISCO OAKLAND BAY BRIDGE
EAST SPAN SEISMIC SAFETY PROJECT

YBI TRANSITION STRUCTURES

COLUMN ISOLATION SLEEVE DETAILS

ORIGINAL SCALE IN MILLIMETERS FOR REDUCED PLANS 0 10 20 30 40 50 60 70 80 90 100

DISREGARD PRINTS BEARING EARLIER REVISION DATES

REVISION DATES (PRELIMINARY STAGE ONLY) 9/13/01 01/31/08 3/31/08 4/22/08 9/29/09 2/14/05 7/31/06 10/27/06 1/24/07 6/25/07

SHEET 64 OF 209

FILE => 04-0120s1-34-006r1-j-cisodet.add

Sept 29, 2009

USERNAME => trmikest DATE PLOTTED => 15-OCT-2009 TIME PLOTTED => 10:54

7 **REVISED PER ADDENDUM No. 7 DATED OCTOBER 19, 2009**

** Dimension shown is perpendicular to edge of deck

* See "WB Typical Section No.5" sheet for dimensions @ Bent W7L

Caltrans Metric

DIST.	COUNTY	ROUTE	KILOMETER POST TOTAL PROJECT	SHEET NO.	TOTAL SHEETS
04	SF	80	12.7/13.2	617	806

REGISTERED ENGINEER - CIVIL

6-23-08
PLANS APPROVAL DATE

REGISTERED PROFESSIONAL ENGINEER A.L. ELY No. 18880 Exp. 6-30-09 CIVIL STATE OF CALIFORNIA

The State of California or its officers or agents shall not be responsible for the accuracy or completeness of electronic copies of this plan sheet.

T.Y. LIN / MOFFATT & NICHOL
TWO HARRISON STREET
SAN FRANCISCO, CA 94105

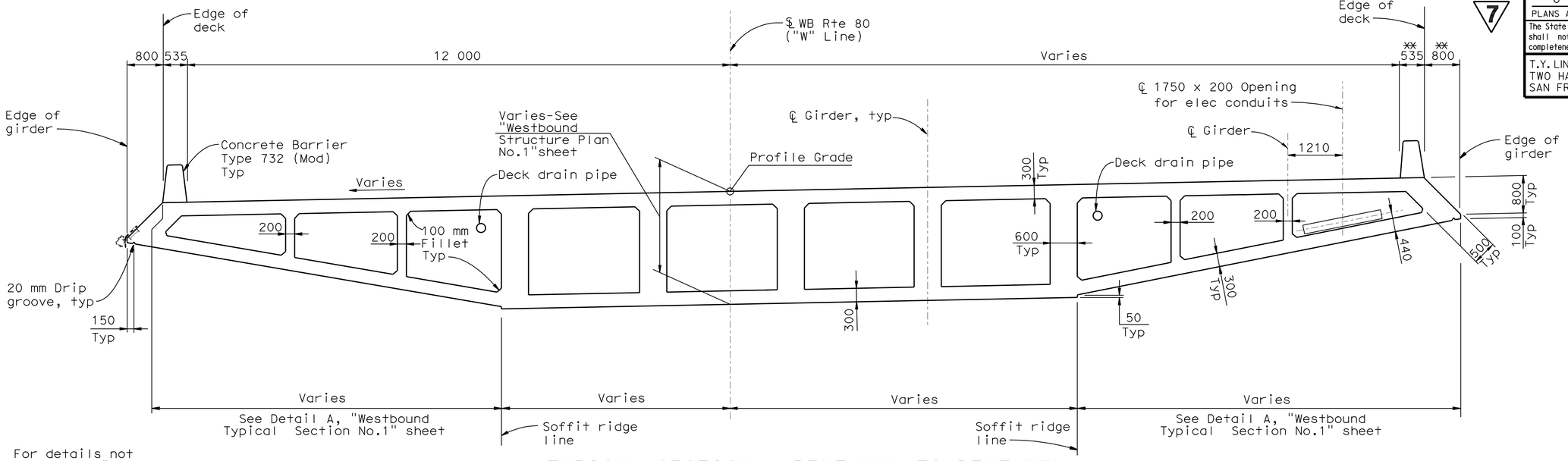

TYPICAL SECTION - BENT W8L TO BENT W7L

1:50

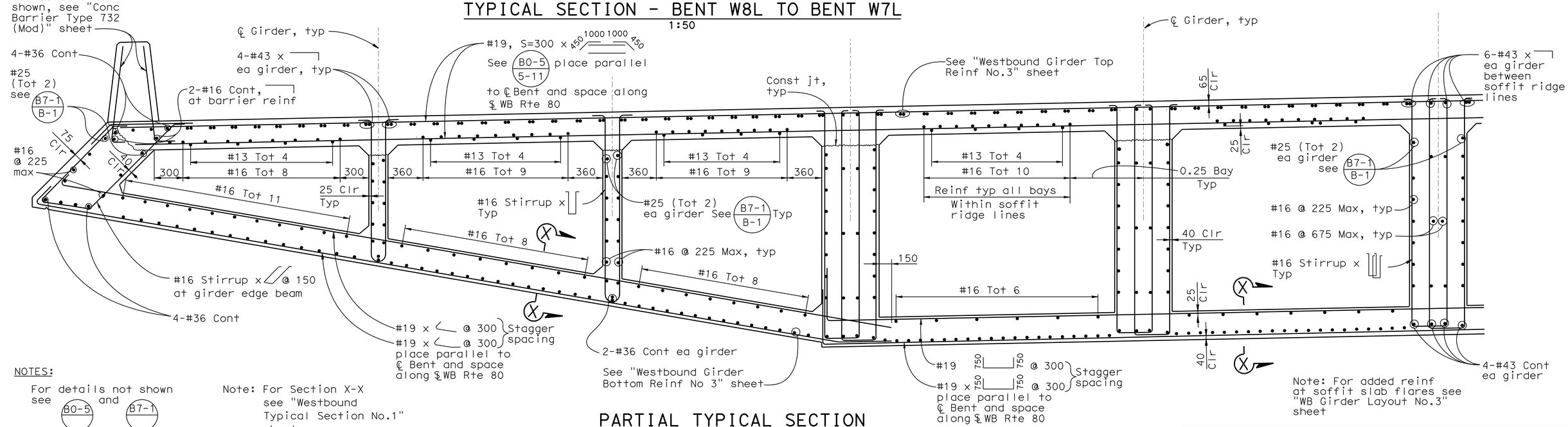

NOTES:

For details not shown see B0-5 and B7-1

Note: For Section X-X see "Westbound Typical Section No.1" sheet

PARTIAL TYPICAL SECTION

1:20

ALL DIMENSIONS ARE IN MILLIMETERS UNLESS OTHERWISE SHOWN

DESIGN OVERSIGHT
JOHN MOOK, BERNARD CHAN, JUAN F. CARPIO
March 3, 2008
SIGN OFF DATE

Rev. Date: 5-18-98

	BY	CHECKED
DESIGN	Jain	Desai
DETAILS	van Ryn/Zucchi/Mai	Jain
QUANTITIES	Liao	E. Nichol

ORIGINAL SCALE IN MILLIMETERS FOR REDUCED PLANS 0 10 20 30 40 50 60 70 80 90 100

PREPARED FOR THE STATE OF CALIFORNIA DEPARTMENT OF TRANSPORTATION

Jal Birdy
PROJECT ENGINEER

CU 04251
EA 0120S1

BRIDGE NO. 34-0006 L/R
KILOMETER POST 12.8

DISREGARD PRINTS BEARING EARLIER REVISION DATES

REVISION DATES (PRELIMINARY STAGE ONLY): 9/13/07 01/31/08 3/3/08 8/28/09 9/29/09 2/14/05 7/3/06 10/2/06 1/24/07 6/25/07

SHEET 68 OF 209

SAN FRANCISCO OAKLAND BAY BRIDGE EAST SPAN SEISMIC SAFETY PROJECT

YBI TRANSITION STRUCTURES

WESTBOUND TYPICAL SECTION NO.4

FILE => 04-0120s1-34-006rl-k-ts04.add

Sept 29, 2009

USERNAME => trmikes1 DATE PLOTTED => 15-OCT-2009 TIME PLOTTED => 10:55

DIST.	COUNTY	ROUTE	KILOMETER POST TOTAL PROJECT	SHEET NO.	TOTAL SHEETS
04	SF	80	12.7/13.2	618	806

REGISTERED ENGINEER - CIVIL
6-23-08
PLANS APPROVAL DATE

REGISTERED PROFESSIONAL ENGINEER A.L. ELY No. 18880 Exp. 6-30-09 CIVIL STATE OF CALIFORNIA

The State of California or its officers or agents shall not be responsible for the accuracy or completeness of electronic copies of this plan sheet.

T.Y. LIN / MOFFATT & NICHOL
TWO HARRISON STREET
SAN FRANCISCO, CA 94105

Caltrans Metric

7 **REVISED PER ADDENDUM No. 7 DATED OCTOBER 19, 2009**

** Dimension shown is perpendicular to edge of deck

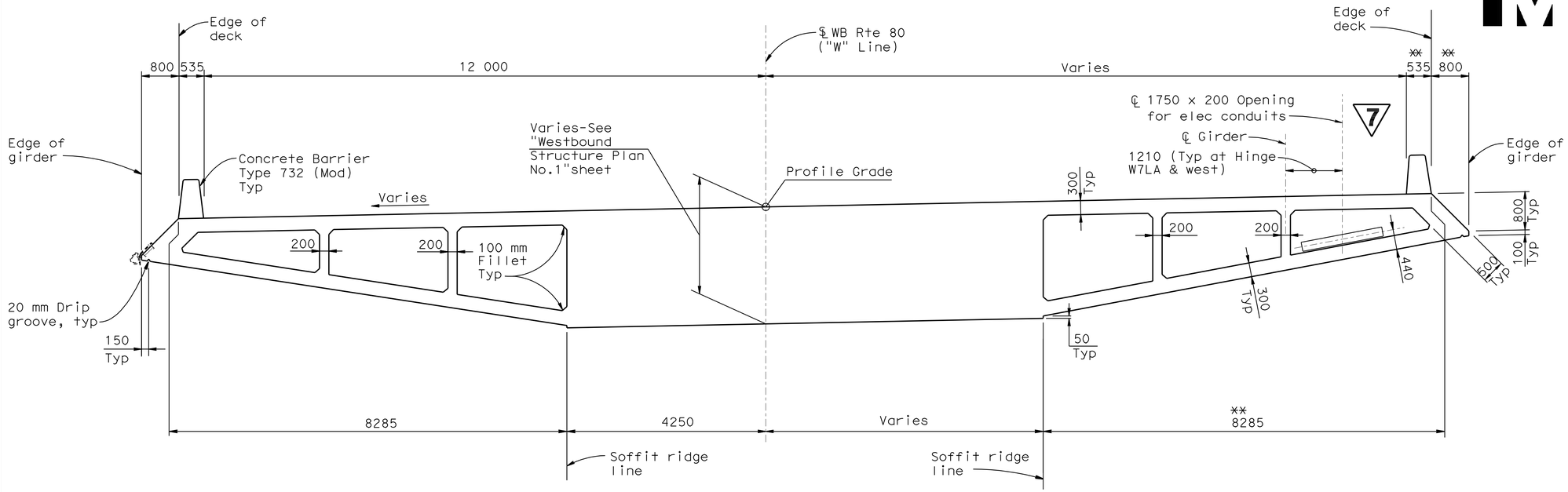

TYPICAL SECTION - BENT W7L TO HINGE W7LA

1:50

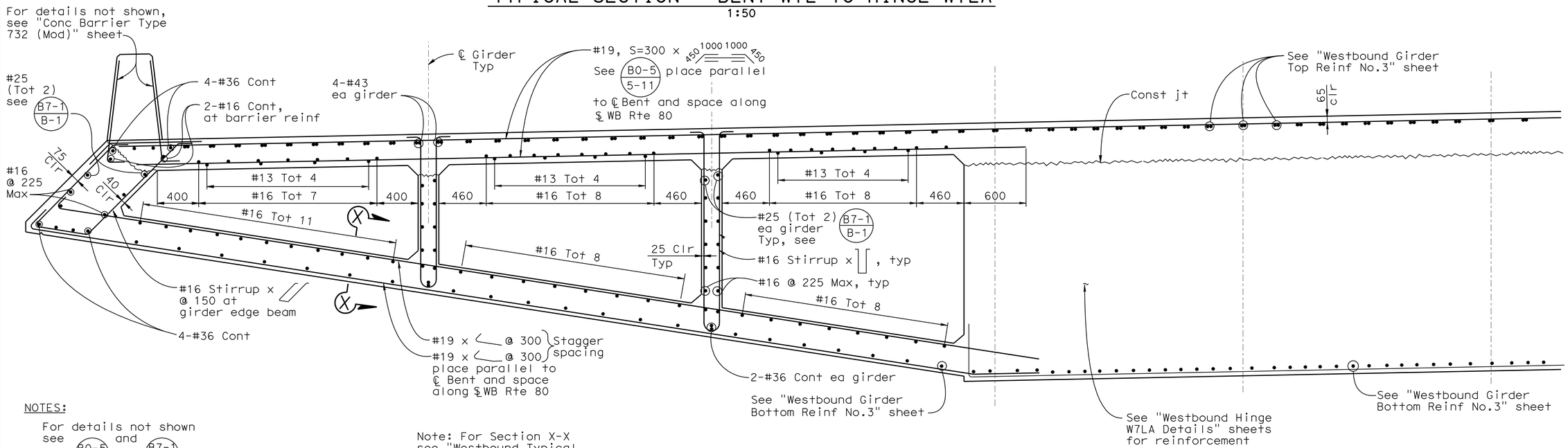

NOTES:

For details not shown see B0-5 and B7-1

Note: For Section X-X see "Westbound Typical Section No.1" sheet

PARTIAL TYPICAL SECTION

1:20

ALL DIMENSIONS ARE IN MILLIMETERS UNLESS OTHERWISE SHOWN

DESIGN OVERSIGHT
JOHN MOOK, BERNARD CHAN, JUAN F. CARPIO
March 3, 2008
SIGN OFF DATE

Rev. Date: 5-18-98

	BY	CHECKED
DESIGN	Jain	Desai
DETAILS	van Ryn/Zucchi/Mai	Jain
QUANTITIES	Liao	E. Nichol

ORIGINAL SCALE IN MILLIMETERS FOR REDUCED PLANS 0 10 20 30 40 50 60 70 80 90 100

PREPARED FOR THE STATE OF CALIFORNIA DEPARTMENT OF TRANSPORTATION

Jal Birdy
PROJECT ENGINEER

CU 04251
EA 0120S1

BRIDGE NO. 34-0006 L/R
KILOMETER POST 12.8

DISREGARD PRINTS BEARING EARLIER REVISION DATES

REVISION DATES (PRELIMINARY STAGE ONLY): 9/13/07 01/31/08 3/13/08 8/28/09 9/29/09 2/14/03 3/13/06 10/12/06 1/24/07 6/25/07

SHEET 69 OF 209

SAN FRANCISCO OAKLAND BAY BRIDGE EAST SPAN SEISMIC SAFETY PROJECT

YBI TRANSITION STRUCTURES

WESTBOUND TYPICAL SECTION NO.5

FILE => 04-0120s1-34-006rl-k-ts05.add

Sept 29, 2009

USERNAME => ttmikes1 DATE PLOTTED => 15-OCT-2009 TIME PLOTTED => 10:55

7 **REVISED PER ADDENDUM No. 7 DATED OCTOBER 19, 2009**

** Dimension shown is perpendicular to edge of deck.

Caltrans Metric

DIST.	COUNTY	ROUTE	KILOMETER POST TOTAL PROJECT	SHEET NO.	TOTAL SHEETS
04	SF	80	12.7/13.2	622	806

REGISTERED ENGINEER - CIVIL

6-23-08
PLANS APPROVAL DATE

REGISTERED PROFESSIONAL ENGINEER A.L. ELY No. 18880 Exp. 6-30-09 CIVIL STATE OF CALIFORNIA

The State of California or its officers or agents shall not be responsible for the accuracy or completeness of electronic copies of this plan sheet.

T.Y. LIN / MOFFATT & NICHOL
TWO HARRISON STREET
SAN FRANCISCO, CA 94105

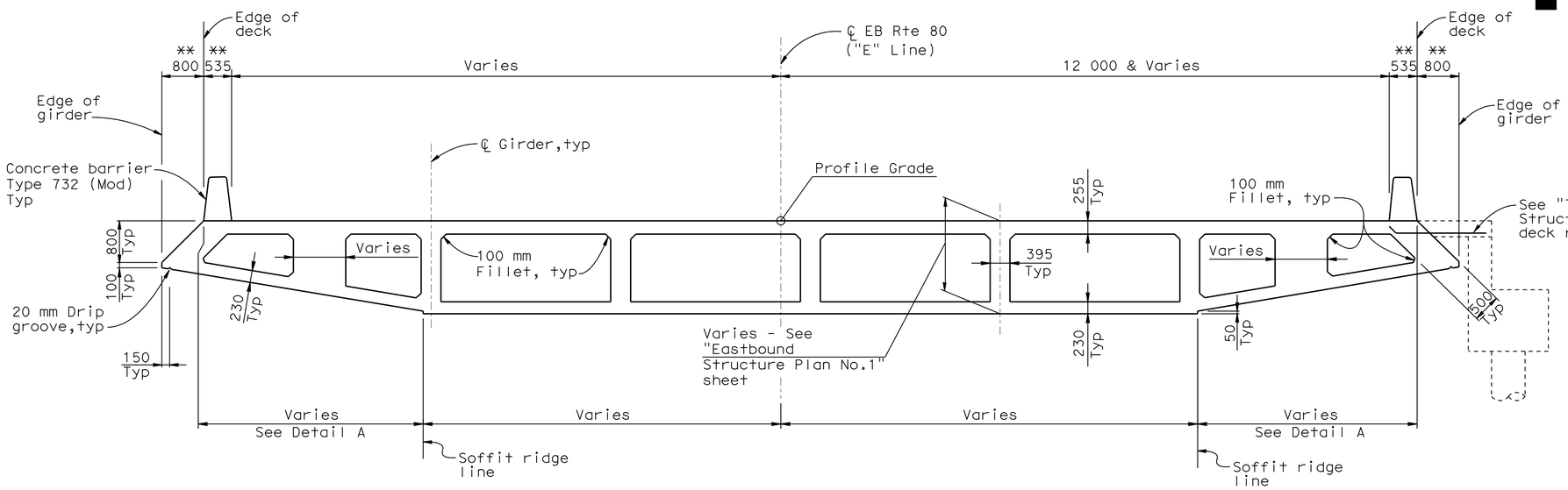

TYPICAL SECTION - ABUTMENT W11R TO BENT W10R

1:50

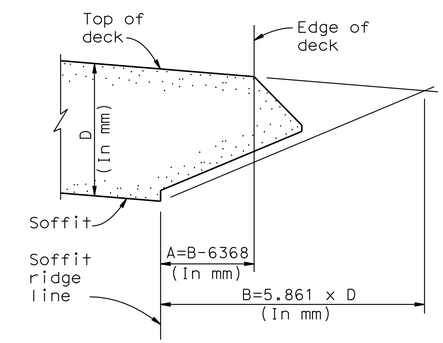

Note: Dimensions A & B are measured perpendicular to edge of deck

DETAIL A

(Typ Abut W11R to Bent W7R)
No Scale

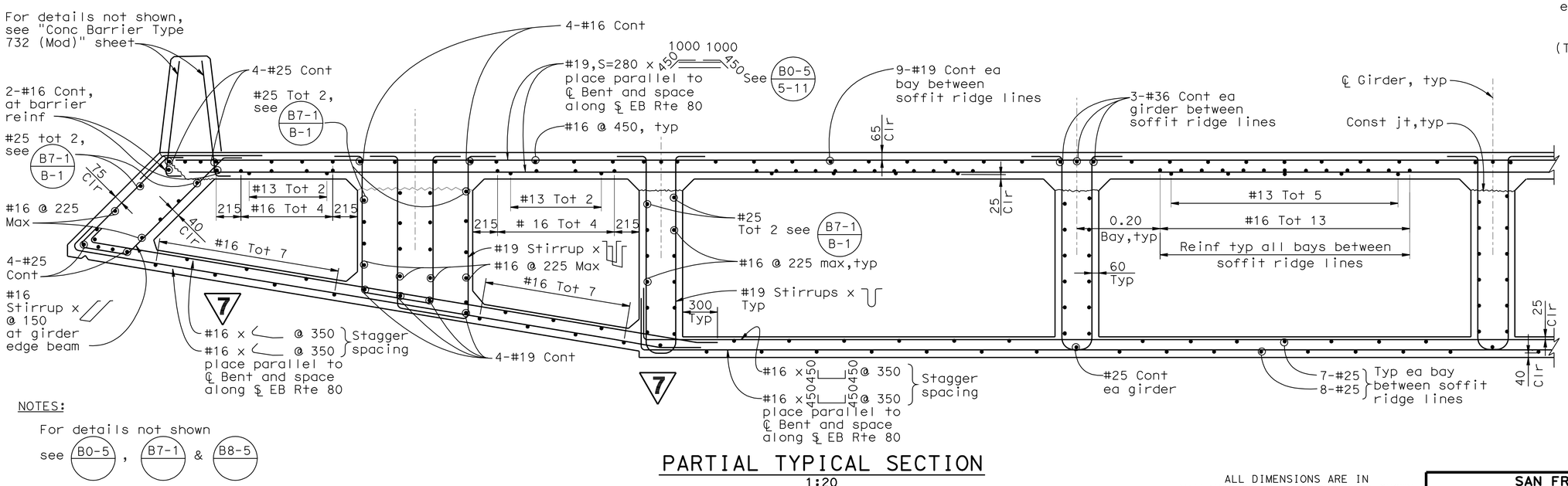

NOTES:

For details not shown see B0-5, B7-1 & B8-5

PARTIAL TYPICAL SECTION

1:20

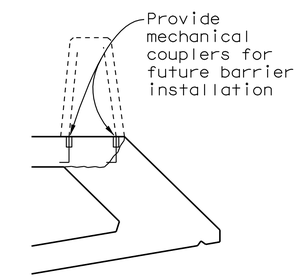

BARRIER AT TEMPORARY EB ON-RAMP

ALL DIMENSIONS ARE IN MILLIMETERS UNLESS OTHERWISE SHOWN

DESIGN OVERSIGHT			
JOHN MOOK, BERNARD CHAN, JUAN F. CARPIO	DESIGN	BY Dodd	CHECKED Jain
March 3, 2008	DETAILS	BY van Ryn/Zucchi/Mai	CHECKED Jain
SIGN OFF DATE	QUANTITIES	BY Liao	CHECKED E. Nichol

Rev. Date: 5-18-98

PREPARED FOR THE STATE OF CALIFORNIA DEPARTMENT OF TRANSPORTATION

Jal Birdy
PROJECT ENGINEER

BRIDGE NO. 34-0006 L/R
KILOMETER POST 12.8

SAN FRANCISCO OAKLAND BAY BRIDGE
EAST SPAN SEISMIC SAFETY PROJECT

YBI TRANSITION STRUCTURES

EASTBOUND TYPICAL SECTION NO.1

ORIGINAL SCALE IN MILLIMETERS FOR REDUCED PLANS 0 10 20 30 40 50 60 70 80 90 100

CU 04251
EA 0120S1

DISREGARD PRINTS BEARING EARLIER REVISION DATES

REVISION DATES (PRELIMINARY STAGE ONLY) 9/13/07 01/24/08 3/3/08 8/28/09 9/29/09 2/24/03 3/3/06 10/2/06 1/24/07 6/23/07

SHEET 73 OF 209

FILE => 04-0120s1-34-006rl-k-ts09.add

Sept 29, 2009

USERNAME => trmikesl DATE PLOTTED => 15-OCT-2009 TIME PLOTTED => 10:55

DIST.	COUNTY	ROUTE	KILOMETER POST TOTAL PROJECT	SHEET NO.	TOTAL SHEETS
04	SF	80	12.7/13.2	623	806

Caltrans Metric

REGISTERED ENGINEER - CIVIL

6-23-08
PLANS APPROVAL DATE

REGISTERED PROFESSIONAL ENGINEER A.L. ELY No. 18880 Exp. 6-30-09 CIVIL STATE OF CALIFORNIA

The State of California or its officers or agents shall not be responsible for the accuracy or completeness of electronic copies of this plan sheet.

T.Y. LIN / MOFFATT & NICHOL
TWO HARRISON STREET
SAN FRANCISCO, CA 94105

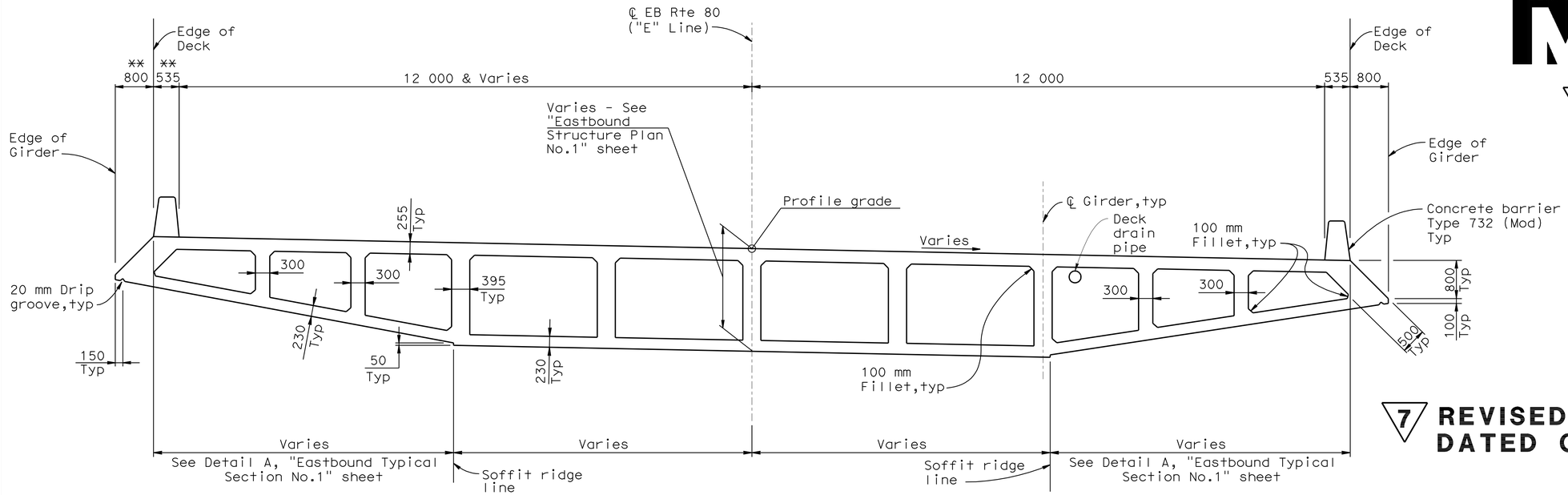

** Dimension shown is perpendicular to edge of deck.

7 REVISED PER ADDENDUM No. 7 DATED OCTOBER 19, 2009

TYPICAL SECTION - BENT W10R TO BENT W8R

1:50

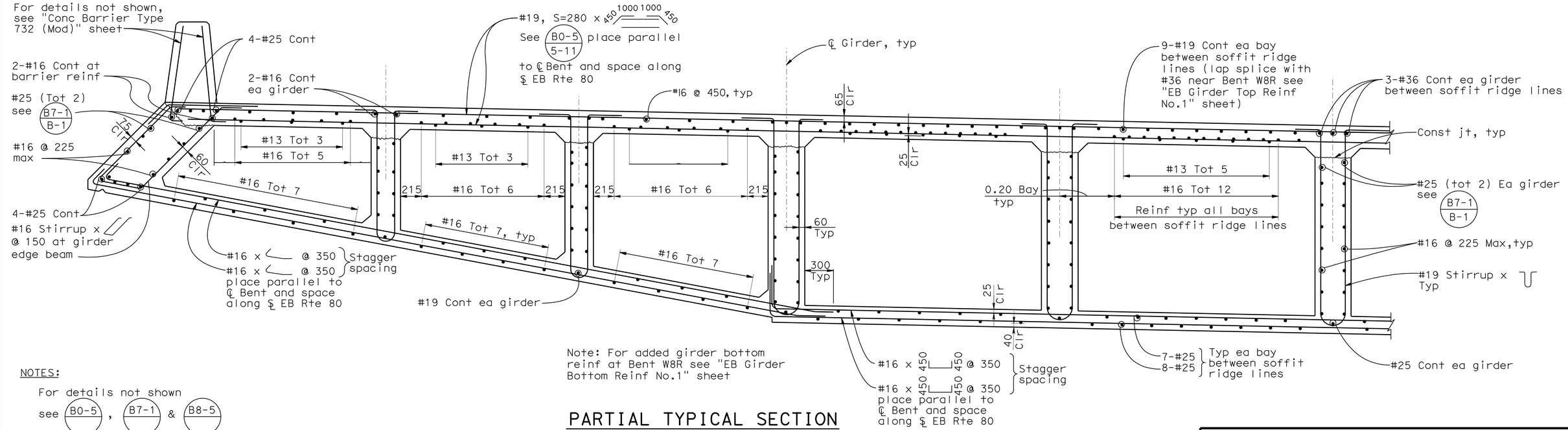

Note: For added girder bottom reinf at Bent W8R see "EB Girder Bottom Reinf No.1" sheet

PARTIAL TYPICAL SECTION

1:20

NOTES:

For details not shown see B0-5, B7-1 & B8-5

ALL DIMENSIONS ARE IN MILLIMETERS UNLESS OTHERWISE SHOWN

DESIGN OVERSIGHT
JOHN MOOK, BERNARD CHAN, JUAN F. CARPIO
March 3, 2008
SIGN OFF DATE

Rev. Date: 5-18-98

	BY	CHECKED
DESIGN	Dodd	Jain
DETAILS	van Ryn/Zucchi/Mai	Jain
QUANTITIES	Liao	E. Nichol

ORIGINAL SCALE IN MILLIMETERS FOR REDUCED PLANS 0 10 20 30 40 50 60 70 80 90 100

PREPARED FOR THE STATE OF CALIFORNIA DEPARTMENT OF TRANSPORTATION

Jal Birdy
PROJECT ENGINEER

CU 04251
EA 0120S1

BRIDGE NO. 34-0006 L/R
KILOMETER POST 12.8

DISREGARD PRINTS BEARING EARLIER REVISION DATES

REVISION DATES (PRELIMINARY STAGE ONLY): 9/13/07 01/31/08 3/13/08 8/28/09 9/29/09 2/14/03 1/3/06 10/2/06 1/24/07 6/25/07

SAN FRANCISCO OAKLAND BAY BRIDGE
EAST SPAN SEISMIC SAFETY PROJECT

YBI TRANSITION STRUCTURES

EASTBOUND TYPICAL SECTION NO.2

SHEET 74 OF 209

FILE => 04-0120s1-34-006rl-k-ts10.add

Sept 29, 2009

USERNAME => ttmikes1 DATE PLOTTED => 15-OCT-2009 TIME PLOTTED => 10:55

DIST.	COUNTY	ROUTE	KILOMETER POST TOTAL PROJECT	SHEET NO.	TOTAL SHEETS
04	SF	80	12.7/13.2	624	806

Caltrans Metric

7

REGISTERED ENGINEER - CIVIL

6-23-08
PLANS APPROVAL DATE

REGISTERED PROFESSIONAL ENGINEER A.L. ELY No. 18880 Exp. 6-30-09 CIVIL STATE OF CALIFORNIA

The State of California or its officers or agents shall not be responsible for the accuracy or completeness of electronic copies of this plan sheet.

T.Y. LIN / MOFFATT & NICHOL
TWO HARRISON STREET
SAN FRANCISCO, CA 94105

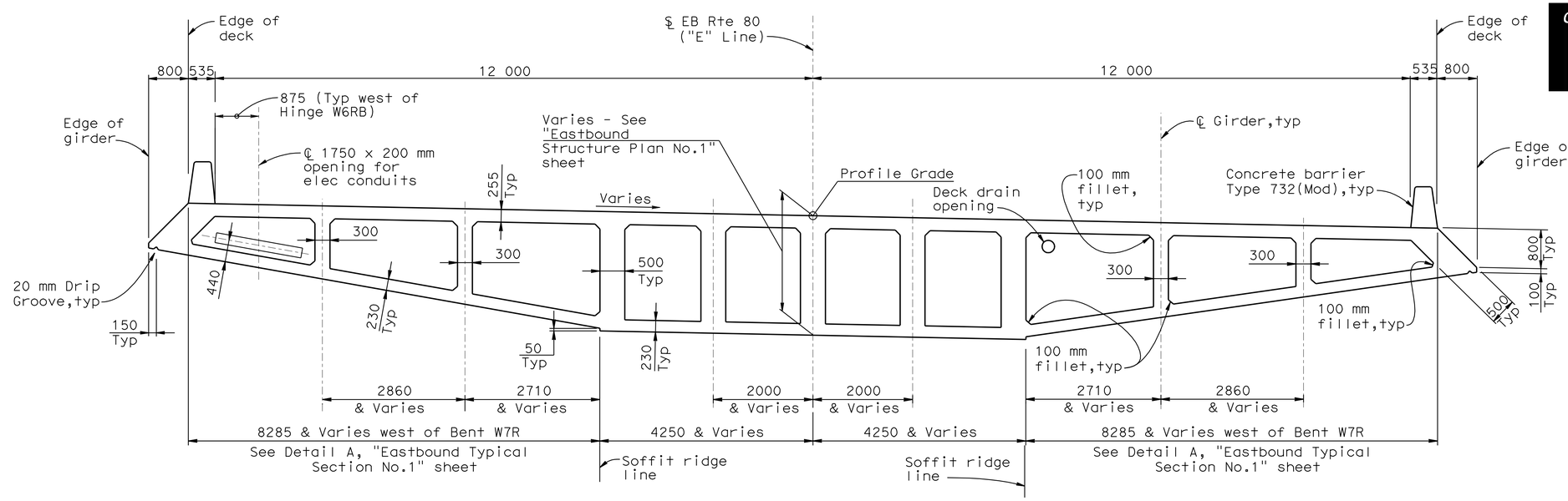

TYPICAL SECTION - BENT W8R TO HINGE W6RB

1:50

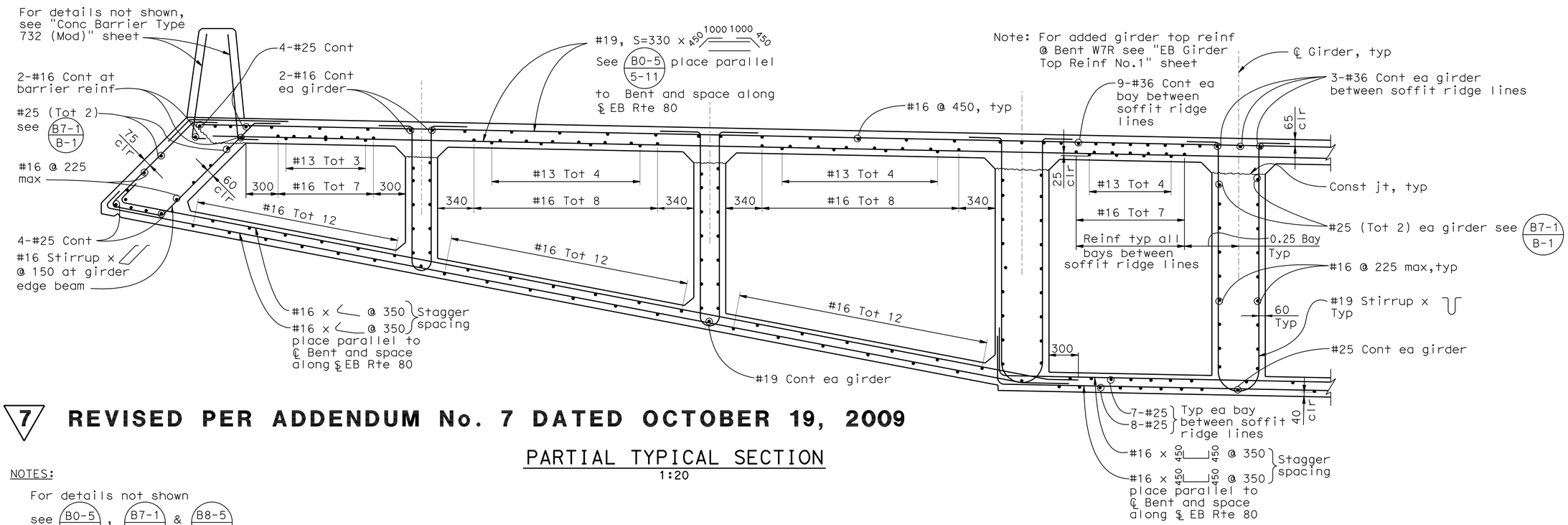

7 **REVISED PER ADDENDUM No. 7 DATED OCTOBER 19, 2009**

PARTIAL TYPICAL SECTION

1:20

NOTES:

For details not shown see B0-5, B7-1 & B8-5

ALL DIMENSIONS ARE IN MILLIMETERS UNLESS OTHERWISE SHOWN

DESIGN OVERSIGHT
JOHN MOOK, BERNARD CHAN, JUAN F. CARPIO
March 3, 2008
SIGN OFF DATE

Rev. Date: 5-18-98

	BY	CHECKED
DESIGN	Dodd	Jain
DETAILS	van Ryn/Zucchi/Mai	Jain
QUANTITIES	Liao	E. Nichol

ORIGINAL SCALE IN MILLIMETERS FOR REDUCED PLANS 0 10 20 30 40 50 60 70 80 90 100

PREPARED FOR THE STATE OF CALIFORNIA DEPARTMENT OF TRANSPORTATION

Jal Birdy
PROJECT ENGINEER

CU 04251
EA 0120S1

BRIDGE NO. 34-0006 L/R
KILOMETER POST 12.8

SAN FRANCISCO OAKLAND BAY BRIDGE
EAST SPAN SEISMIC SAFETY PROJECT

YBI TRANSITION STRUCTURES

EASTBOUND TYPICAL SECTION NO.3

DISREGARD PRINTS BEARING EARLIER REVISION DATES

REVISION DATES (PRELIMINARY STAGE ONLY) 9/13/07 01/31/08 3/31/08 8/28/09 9/29/09 2/14/05 1/31/06 10/27/06 1/24/07 6/25/07

SHEET 75 OF 209

FILE => 04-0120s1-34-006rl-k-ts11.add

Sept 29, 2009

USERNAME => trmikest DATE PLOTTED => 15-OCT-2009 TIME PLOTTED => 10:56

DIST.	COUNTY	ROUTE	KILOMETER POST TOTAL PROJECT	SHEET NO.	TOTAL SHEETS
04	SF	80	12.7/13.2	625	806

Caltrans Metric

REGISTERED ENGINEER - CIVIL

6-23-08
PLANS APPROVAL DATE

REGISTERED PROFESSIONAL ENGINEER A.L. ELY No. 18880 Exp. 6-30-09 CIVIL STATE OF CALIFORNIA

The State of California or its officers or agents shall not be responsible for the accuracy or completeness of electronic copies of this plan sheet.

T.Y. LIN / MOFFATT & NICHOL
TWO HARRISON STREET
SAN FRANCISCO, CA 94105

7 **REVISED PER ADDENDUM No. 7 DATED OCTOBER 19, 2009**

** Dimension shown is perpendicular to edge of deck.

Note: Concrete for bike path longitudinal beams not to be placed sooner than 10 days after stressing main girders.

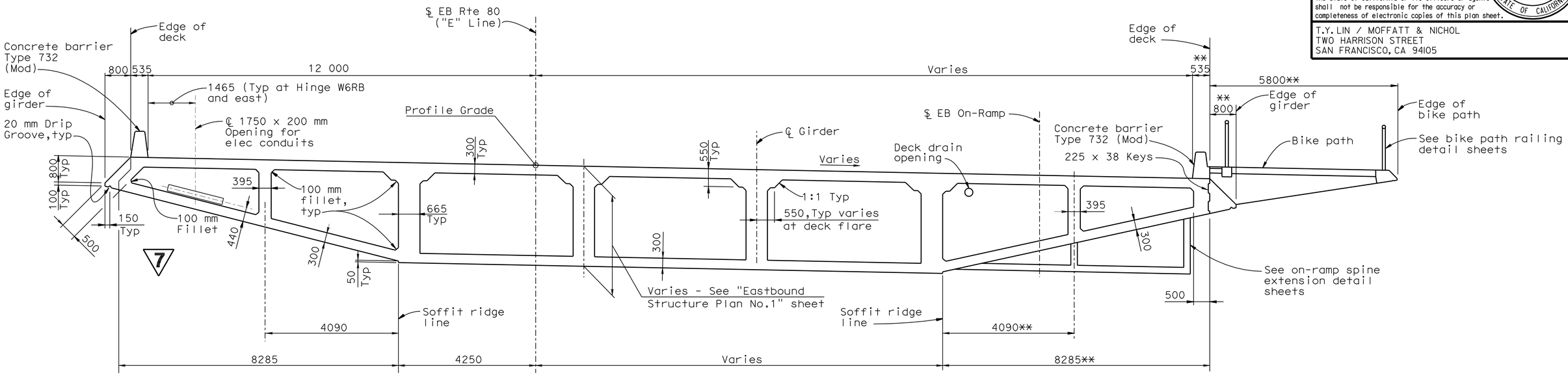

TYPICAL SECTION - HINGE W6RB TO BENT W5R

1:60

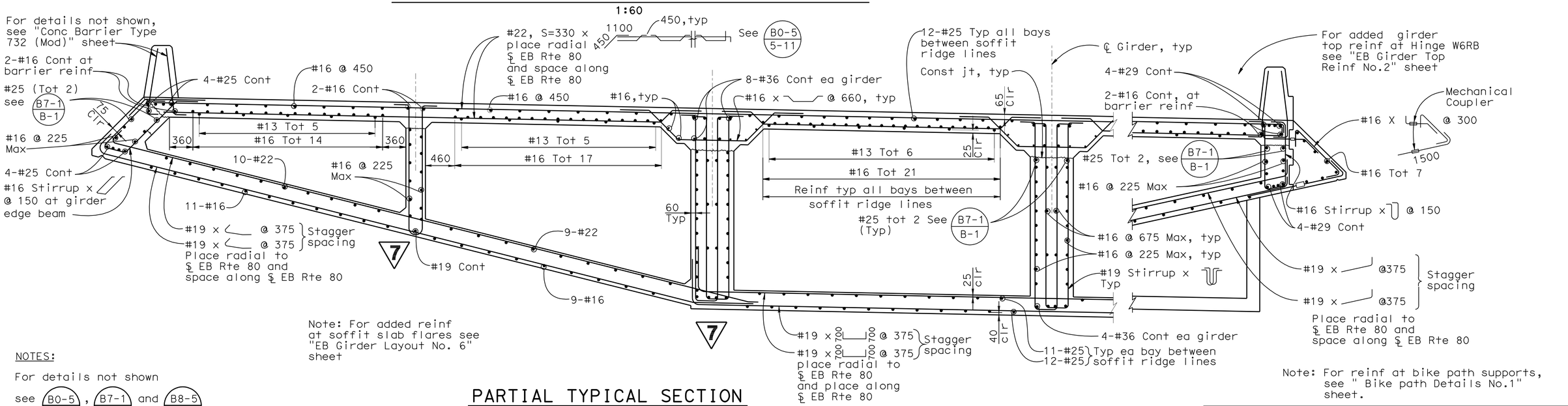

PARTIAL TYPICAL SECTION

1:30

NOTES:

For details not shown see B0-5, B7-1 and B8-5

ALL DIMENSIONS ARE IN MILLIMETERS UNLESS OTHERWISE SHOWN

DESIGN OVERSIGHT
JOHN MOOK, BERNARD CHAN, JUAN F. CARPIO
March 3, 2008
SIGN OFF DATE

Rev. Date: 5-18-98

	BY	CHECKED
DESIGN	Dodd	Jain
DETAILS	van Ryn/Zucchi/Mai	Jain
QUANTITIES	Liao	E. Nichol

ORIGINAL SCALE IN MILLIMETERS FOR REDUCED PLANS 0 10 20 30 40 50 60 70 80 90 100

PREPARED FOR THE STATE OF CALIFORNIA DEPARTMENT OF TRANSPORTATION

Jal Birdy
PROJECT ENGINEER

CU 04251
EA 0120S1

BRIDGE NO. 34-0006 L/R
KILOMETER POST 12.8

SAN FRANCISCO OAKLAND BAY BRIDGE EAST SPAN SEISMIC SAFETY PROJECT

YBI TRANSITION STRUCTURES

EASTBOUND TYPICAL SECTION NO.4

DISREGARD PRINTS BEARING EARLIER REVISION DATES

REVISION DATES (PRELIMINARY STAGE ONLY): 9/13/01 01/31/08 3/31/08 8/28/09 9/29/09 2/14/05 3/3/06 10/2/06 1/24/07 6/25/07

SHEET 76 OF 209

Sept 29, 2009

FILE => 04-0120s1-34-006rl-k-ts12.add

USERNAME => trmikest DATE PLOTTED => 15-OCT-2009 TIME PLOTTED => 10:56

DIST.	COUNTY	ROUTE	KILOMETER POST TOTAL PROJECT	SHEET NO.	TOTAL SHEETS
04	SF	80	12.7/13.2	626	806

Caltrans Metric

REGISTERED ENGINEER - CIVIL

6-23-08
PLANS APPROVAL DATE

REGISTERED PROFESSIONAL ENGINEER A.L. ELY No. 18880 Exp. 6-30-09 CIVIL STATE OF CALIFORNIA

The State of California or its officers or agents shall not be responsible for the accuracy or completeness of electronic copies of this plan sheet.

T.Y. LIN / MOFFATT & NICHOL
TWO HARRISON STREET
SAN FRANCISCO, CA 94105

** Dimension shown is perpendicular to edge of deck.

7

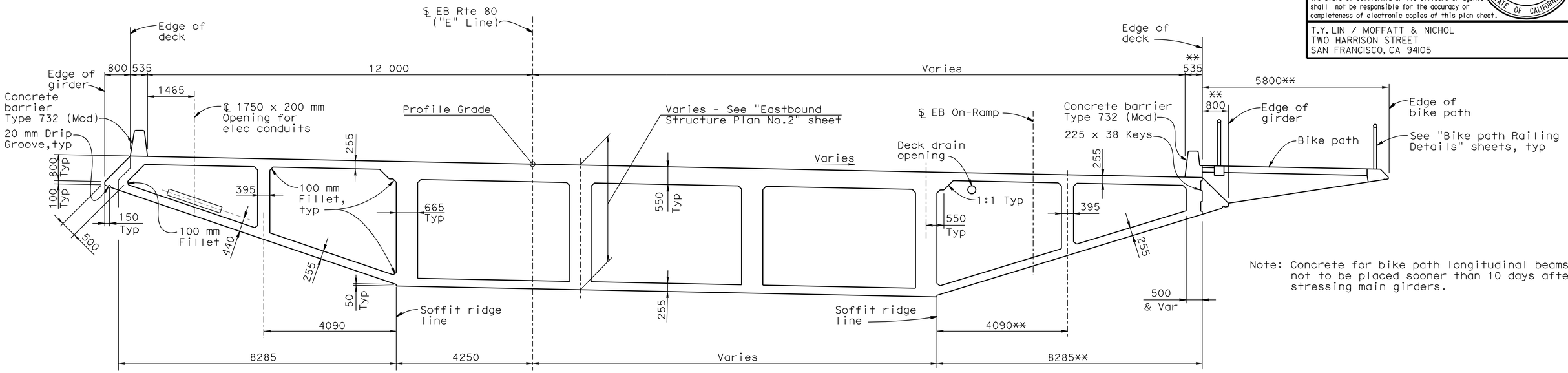

Note: Concrete for bike path longitudinal beams not to be placed sooner than 10 days after stressing main girders.

TYPICAL SECTION - BENT W5R TO BENT W4R

1:60

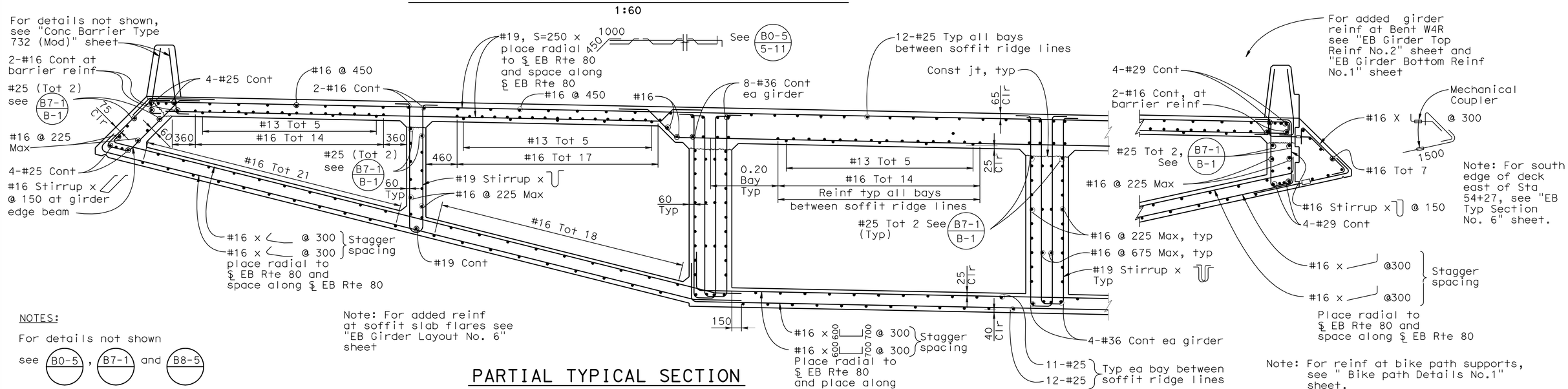

Note: For added reinf at soffit slab flares see "EB Girder Layout No. 6" sheet

Note: For south edge of deck east of Sta 54+27, see "EB Typ Section No. 6" sheet.

Note: For reinf at bike path supports, see " Bike path Details No.1" sheet.

NOTES:

For details not shown see B0-5, B7-1 and B8-5

PARTIAL TYPICAL SECTION

1:30

7 **REVISED PER ADDENDUM No. 7 DATED OCTOBER 19, 2009**

ALL DIMENSIONS ARE IN MILLIMETERS UNLESS OTHERWISE SHOWN

DESIGN OVERSIGHT
JOHN MOOK, BERNARD CHAN, JUAN F. CARPIO
March 3, 2008
SIGN OFF DATE

Rev. Date: 5-18-98

	BY	CHECKED
DESIGN	Dodd	Jain
DETAILS	van Ryn/Zucchi/Mai	Jain
QUANTITIES	Liao	E. Nichol

PREPARED FOR THE STATE OF CALIFORNIA DEPARTMENT OF TRANSPORTATION

Jal Birdy
PROJECT ENGINEER

CU 04251
EA 0120S1

BRIDGE NO. 34-0006 L/R
KILOMETER POST 12.8

SAN FRANCISCO OAKLAND BAY BRIDGE
EAST SPAN SEISMIC SAFETY PROJECT

YBI TRANSITION STRUCTURES

EASTBOUND TYPICAL SECTION NO.5

ORIGINAL SCALE IN MILLIMETERS FOR REDUCED PLANS 0 10 20 30 40 50 60 70 80 90 100

DISREGARD PRINTS BEARING EARLIER REVISION DATES

REVISION DATES (PRELIMINARY STAGE ONLY) 9/13/07 01/31/08 3/31/08 8/28/09 9/29/09 2/14/03 1/3/06 10/2/06 1/24/07 6/25/07

SHEET 77 OF 209

FILE => 04-0120s1-34-006rl-k-ts13.add

Sept 29, 2009

USERNAME => trmikes! DATE PLOTTED => 15-OCT-2009 TIME PLOTTED => 10:56

DIST.	COUNTY	ROUTE	KILOMETER POST TOTAL PROJECT	SHEET NO.	TOTAL SHEETS
04	SF	80	12.7/13.2	627	806

Caltrans Metric

REGISTERED ENGINEER - CIVIL

6-23-08
PLANS APPROVAL DATE

REGISTERED PROFESSIONAL ENGINEER A.L. ELY No. 18880 Exp. 6-30-09 CIVIL STATE OF CALIFORNIA

The State of California or its officers or agents shall not be responsible for the accuracy or completeness of electronic copies of this plan sheet.

T.Y. LIN / MOFFATT & NICHOL
TWO HARRISON STREET
SAN FRANCISCO, CA 94105

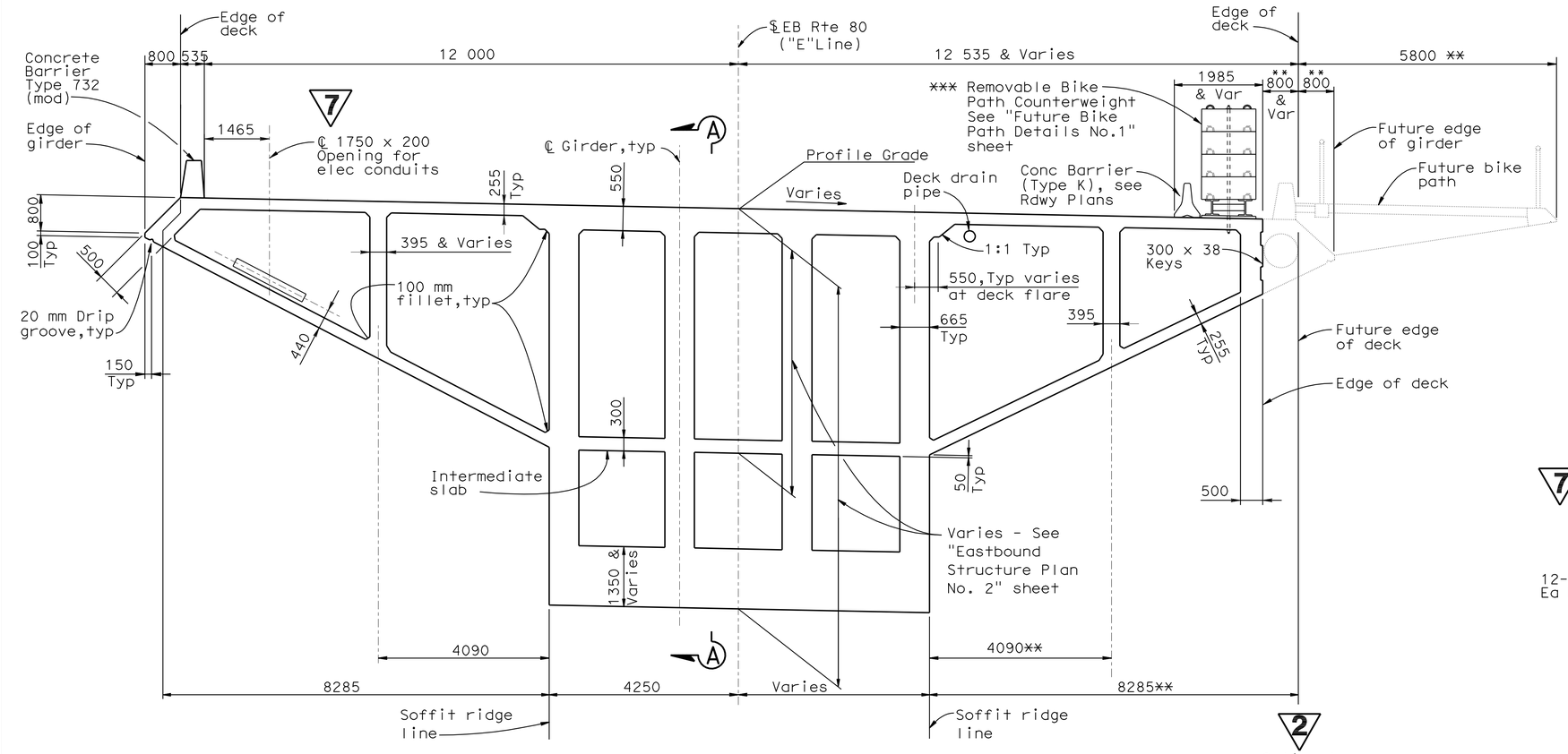

SECTION - BENT W4R TO HINGE K CLOSURE
1:60

** Dimension shown is perpendicular to future edge of deck.

*** Removable Bike Path Counterweight to extend from Sta 55+43 to Sta 55+72.

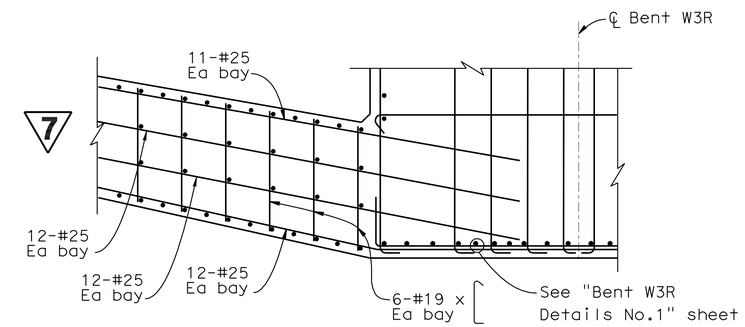

DETAIL B
1:30

Sept 29, 2009

2 REVISED PER ADDENDUM No. 2 DATED JANUARY 22, 2009

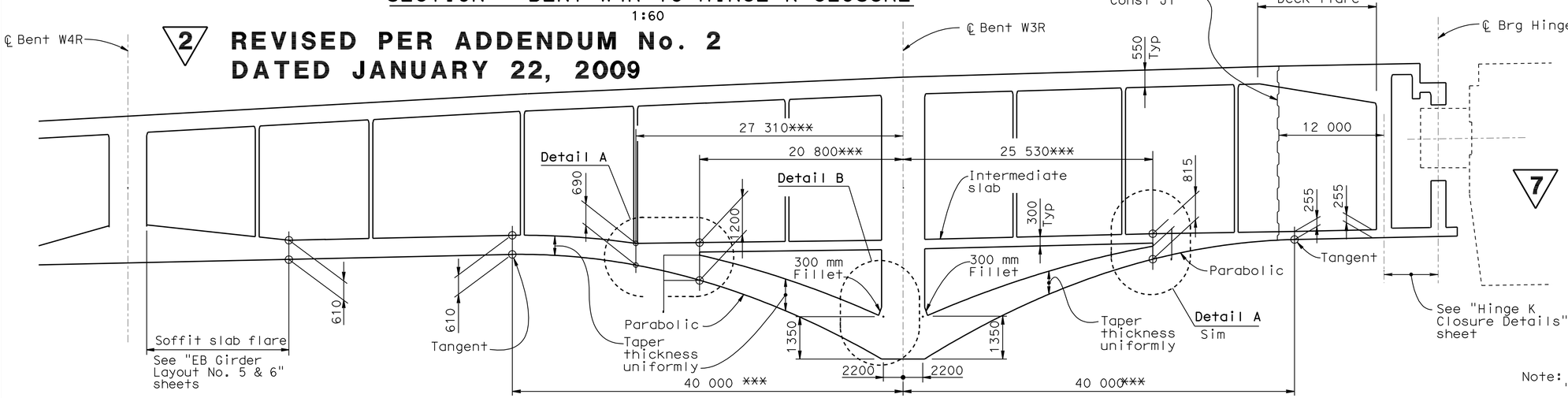

7 REVISED PER ADDENDUM No. 7 DATED OCTOBER 19, 2009

*** Indicates dimension measured along ℄ EB Rte 80

Note: For Detail A see "EB Typical Section No.7" sheet

Note: For partial typical section see "Eastbound Typical Section No.7" sheet

LONGITUDINAL SECTION A-A
NO SCALE

ALL DIMENSIONS ARE IN MILLIMETERS UNLESS OTHERWISE SHOWN

DESIGN OVERSIGHT
JOHN MOOK, BERNARD CHAN, JUAN F. CARPIO
March 3, 2008
SIGN OFF DATE

Rev. Date: 5-18-98

DESIGN	BY Dodd	CHECKED Jain
DETAILS	BY van Ryn/Zucchi/Mai	CHECKED Jain
QUANTITIES	BY Liao	CHECKED E. Nichol

PREPARED FOR THE STATE OF CALIFORNIA DEPARTMENT OF TRANSPORTATION

Jal Birdy
PROJECT ENGINEER

BRIDGE NO. 34-0006 L/R
KILOMETER POST 12.8

SAN FRANCISCO OAKLAND BAY BRIDGE
EAST SPAN SEISMIC SAFETY PROJECT

YBI TRANSITION STRUCTURES

EASTBOUND TYPICAL SECTION NO.6

ORIGINAL SCALE IN MILLIMETERS FOR REDUCED PLANS 0 10 20 30 40 50 60 70 80 90 100

CU 04251
EA 0120S1

DISREGARD PRINTS BEARING EARLIER REVISION DATES

REVISION DATES (PRELIMINARY STAGE ONLY) 9/13/07 01/31/08 3/31/08 8/28/09 9/29/09 2/14/03 1/3/06 10/2/06 1/24/07 6/28/07

SHEET 78 OF 209

FILE => 04-0120s1-34-006rl-k-ts14.add

USERNAME => trmikesl DATE PLOTTED => 15-OCT-2009 TIME PLOTTED => 10:57

DIST.	COUNTY	ROUTE	KILOMETER POST TOTAL PROJECT	SHEET NO.	TOTAL SHEETS
04	SF	80	12.7/13.2	628	806

Caltrans Metric

REGISTERED ENGINEER - CIVIL

6-23-08
PLANS APPROVAL DATE

REGISTERED PROFESSIONAL ENGINEER A.L. ELY No. 18880 Exp. 6-30-09 CIVIL STATE OF CALIFORNIA

The State of California or its officers or agents shall not be responsible for the accuracy or completeness of electronic copies of this plan sheet.

T.Y. LIN / MOFFATT & NICHOL
TWO HARRISON STREET
SAN FRANCISCO, CA 94105

7

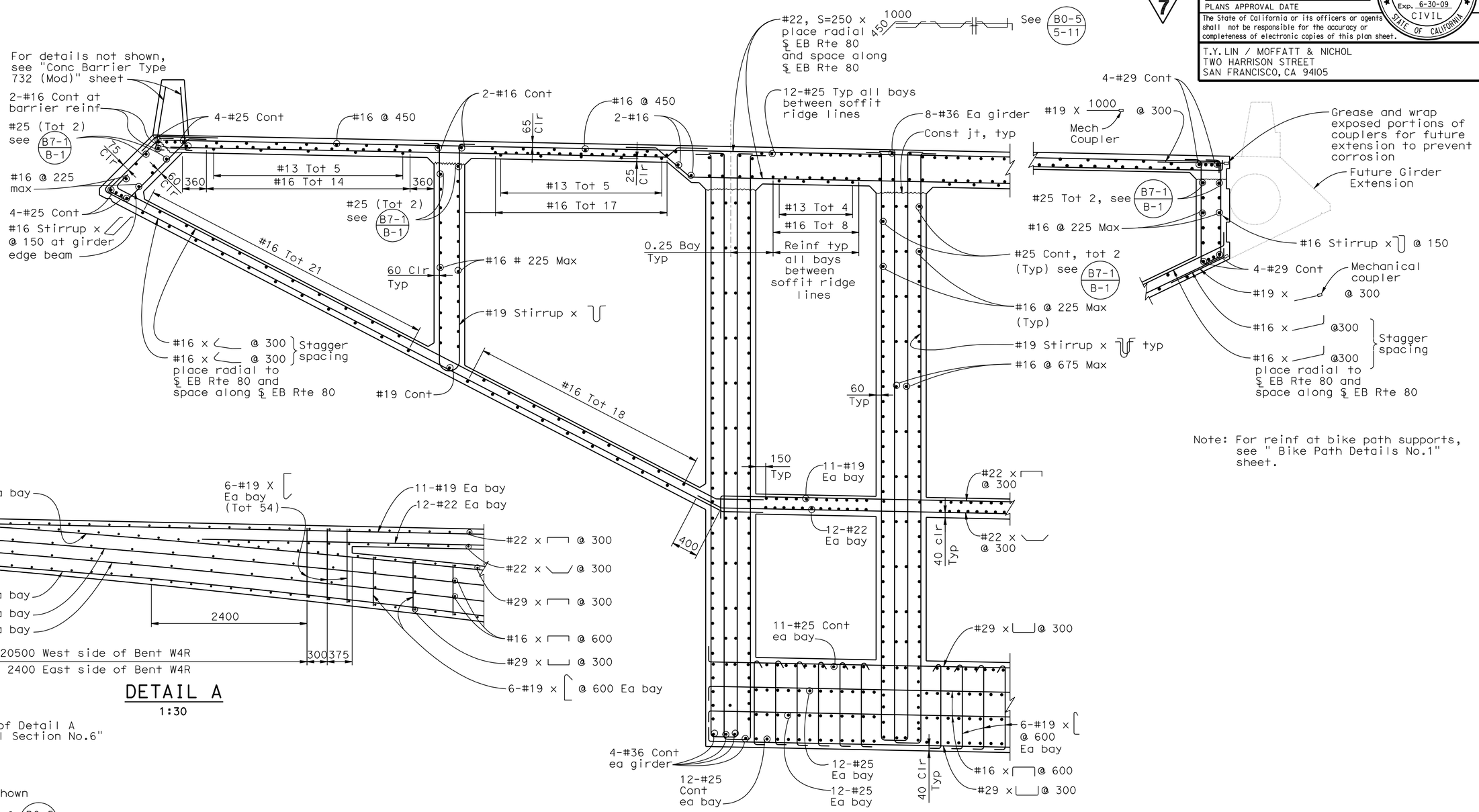

DETAIL A
1:30

Note: For location of Detail A see"EB Typical Section No.6" sheet

Note: For reinf at bike path supports, see " Bike Path Details No.1" sheet.

NOTES:

For details not shown see B0-5, B7-1 & B8-5

PARTIAL TYPICAL SECTION - BENT W4R TO HINGE K CLOSURE
1:30

7 **REVISED PER ADDENDUM No. 7 DATED OCTOBER 19, 2009**

ALL DIMENSIONS ARE IN MILLIMETERS UNLESS OTHERWISE SHOWN

DESIGN OVERSIGHT
JOHN MOOK, BERNARD CHAN, JUAN F. CARPIO
March 3, 2008
SIGN OFF DATE

	BY	CHECKED
DESIGN	Dodd	Jain
DETAILS	van Ryn/Zucchi/Mai	Jain
QUANTITIES	Liao	E. Nichol

PREPARED FOR THE STATE OF CALIFORNIA DEPARTMENT OF TRANSPORTATION

Jal Birdy
PROJECT ENGINEER

BRIDGE NO. 34-0006 L/R
KILOMETER POST 12.8

SAN FRANCISCO OAKLAND BAY BRIDGE
EAST SPAN SEISMIC SAFETY PROJECT

YBI TRANSITION STRUCTURES

EASTBOUND TYPICAL SECTION NO.7

Rev. Date: 5-18-98

ORIGINAL SCALE IN MILLIMETERS FOR REDUCED PLANS 0 10 20 30 40 50 60 70 80 90 100

CU 04251
EA 0120S1

DISREGARD PRINTS BEARING EARLIER REVISION DATES

REVISION DATES (PRELIMINARY STAGE ONLY) 9/13/07 01/31/08 3/31/08 8/28/09 9/29/09 2/14/03 3/14/06 10/12/06 1/24/07 6/25/07

SHEET 79 OF 209

FILE => 04-0120s1-34-006rl-k-ts15.add

Sept 29, 2009

USERNAME => ttmikes1 DATE PLOTTED => 15-OCT-2009 TIME PLOTTED => 10:57

DIST.	COUNTY	ROUTE	KILOMETER POST TOTAL PROJECT	SHEET NO.	TOTAL SHEETS
04	SF	80	12.7/13.2	629	806

REGISTERED ENGINEER - CIVIL

6-23-08
PLANS APPROVAL DATE

REGISTERED PROFESSIONAL ENGINEER A.L. ELY No. 18880 Exp. 6-30-09 CIVIL STATE OF CALIFORNIA

The State of California or its officers or agents shall not be responsible for the accuracy or completeness of electronic copies of this plan sheet.

T.Y. LIN / MOFFATT & NICHOL
TWO HARRISON STREET
SAN FRANCISCO, CA 94105

Caltrans Metric

7

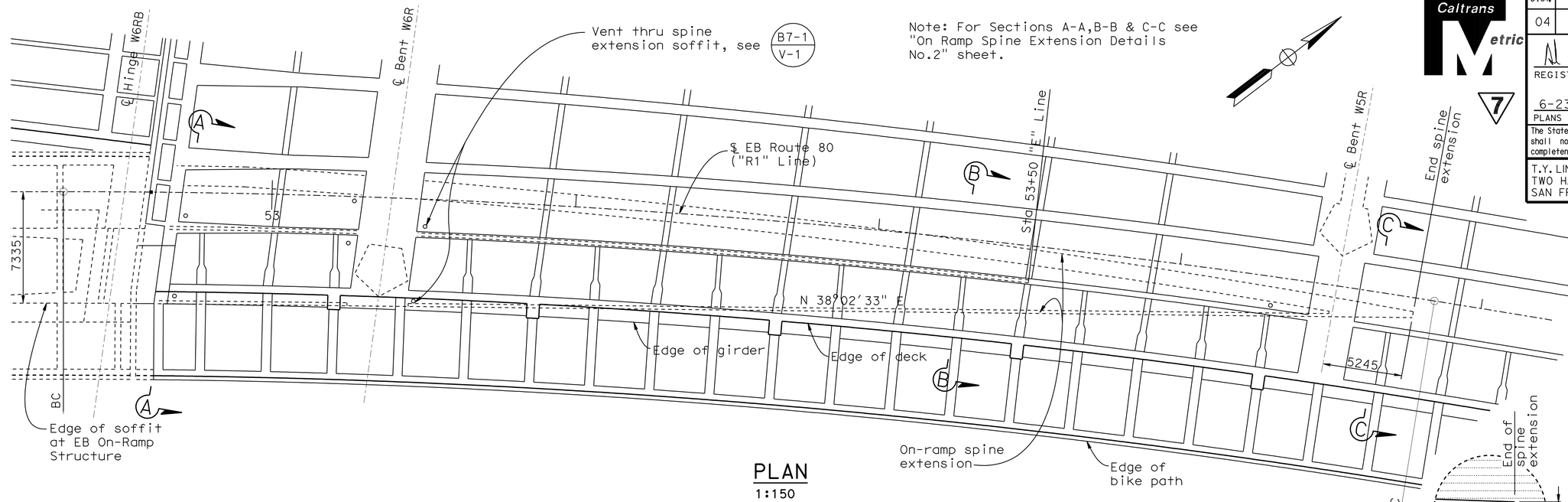

Note: For Sections A-A,B-B & C-C see "On Ramp Spine Extension Details No.2" sheet.

Note:
Structural concrete for spine extension shall have a min 28 day compressive strength of 25 MPa.

PLAN
1:150

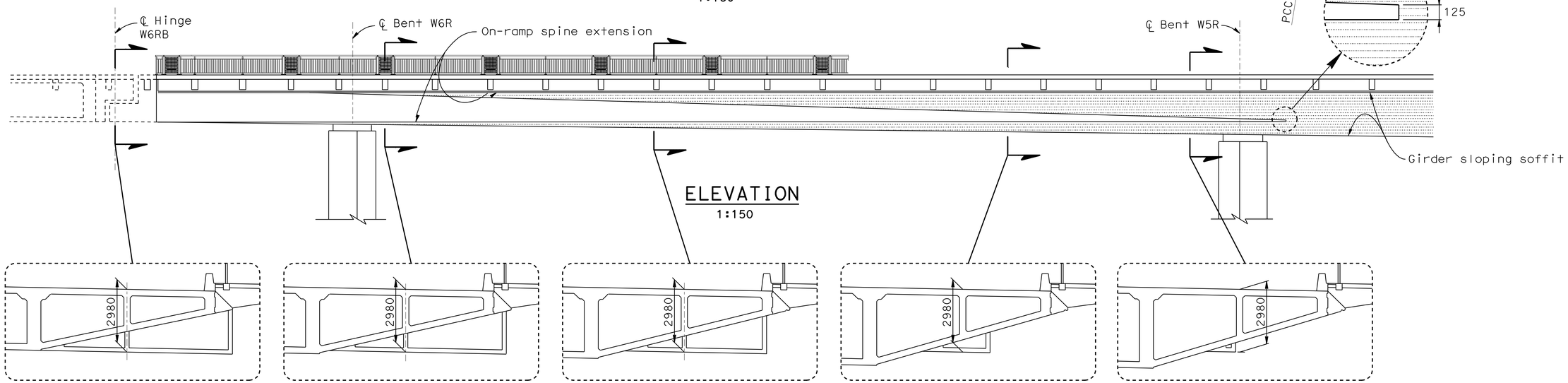

ELEVATION
1:150

Note:
Concrete for spine extension not to be placed until 30 days after stressing of transition structure.

7 **REVISED PER ADDENDUM No. 7 DATED OCTOBER 19, 2009**

ALL DIMENSIONS ARE IN MILLIMETERS UNLESS OTHERWISE SHOWN

DESIGN OVERSIGHT
JOHN MOOK, BERNARD CHAN, JUAN F. CARPIO
March 3, 2008
SIGN OFF DATE

Rev. Date: 5-18-98

	BY	CHECKED
DESIGN	Desai	Shangkuan
DETAILS	van Ryn/Zucchi/Mai	Jain
QUANTITIES	Liao	E. Nichol

PREPARED FOR THE STATE OF CALIFORNIA DEPARTMENT OF TRANSPORTATION

Jal Birdy
PROJECT ENGINEER

CU 04251
EA 0120S1

BRIDGE NO. 34-0006 L/R
KILOMETER POST 12.8

SAN FRANCISCO OAKLAND BAY BRIDGE
EAST SPAN SEISMIC SAFETY PROJECT

YBI TRANSITION STRUCTURES

ON-RAMP SPINE EXTENSION DETAILS NO.1

ORIGINAL SCALE IN MILLIMETERS FOR REDUCED PLANS 0 10 20 30 40 50 60 70 80 90 100

DISREGARD PRINTS BEARING EARLIER REVISION DATES

REVISION DATES (PRELIMINARY STAGE ONLY): 9/13/01 01/31/08 3/31/08 5/22/09 8/28/09 9/29/09 1/31/06 10/27/06 1/24/07 6/25/07

SHEET 80 OF 209

FILE => 04-0120s1-34-006r1-k-tspext01.add

Sept 29, 2009

USERNAME => trmikest DATE PLOTTED => 15-OCT-2009 TIME PLOTTED => 10:57

DIST.	COUNTY	ROUTE	KILOMETER POST TOTAL PROJECT	SHEET NO.	TOTAL SHEETS
04	SF	80	12.7/13.2	632	806

REGISTERED ENGINEER - CIVIL

6-23-08

PLANS APPROVAL DATE

REGISTERED PROFESSIONAL ENGINEER A.L. ELY No. 18880 Exp. 6-30-09 CIVIL STATE OF CALIFORNIA

The State of California or its officers or agents shall not be responsible for the accuracy or completeness of electronic copies of this plan sheet.

T.Y. LIN / MOFFATT & NICHOL
TWO HARRISON STREET
SAN FRANCISCO, CA 94105

Caltrans Metric

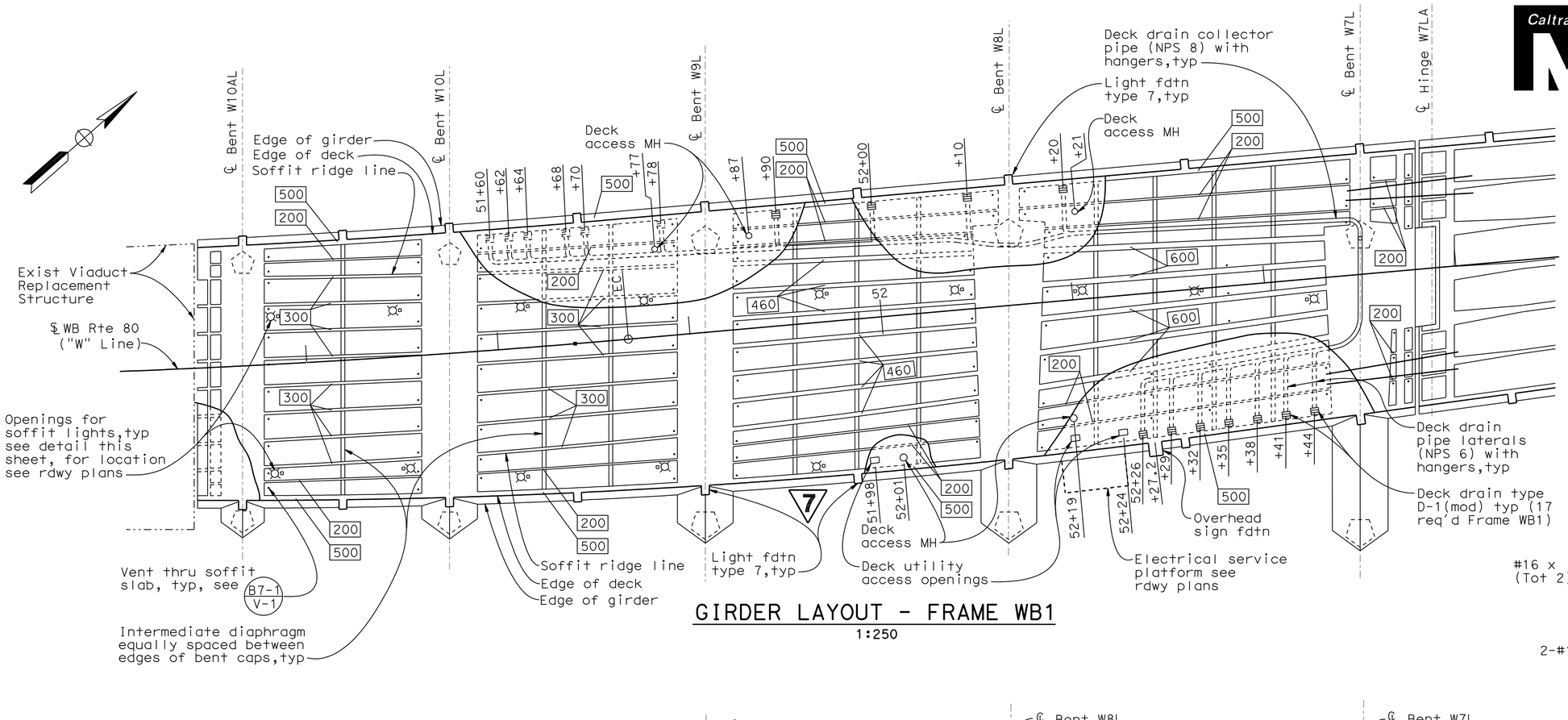

GIRDER LAYOUT - FRAME WB1

1:250

LEGEND

500 Indicates girder stem width in mm

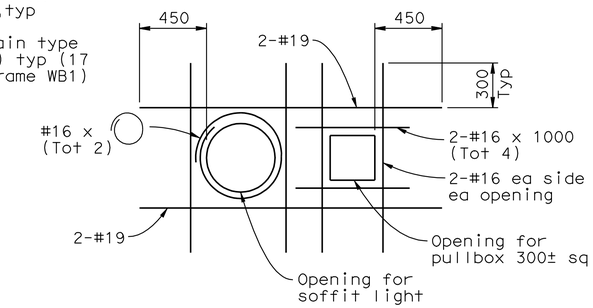

PLAN AT SOFFIT LIGHT OPENING

For details not shown, see B7-1

No Scale

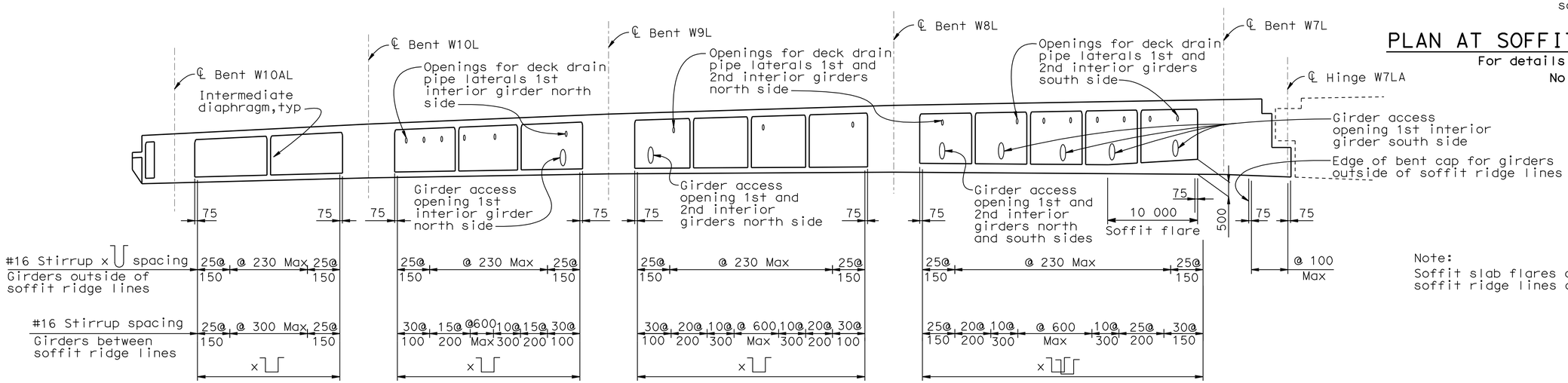

Note:
Soffit slab flares are between soffit ridge lines only.

LONGITUDINAL SECTION - FRAME WB1

No Scale

7 **REVISED PER ADDENDUM No. 7**
DATED OCTOBER 19, 2009

ALL DIMENSIONS ARE IN MILLIMETERS UNLESS OTHERWISE SHOWN

DESIGN OVERSIGHT
JOHN MOOK, BERNARD CHAN, JUAN F. CARPIO
March 3, 2008
SIGN OFF DATE

	BY	CHECKED
DESIGN	Cavafian	Shangkuan
DETAILS	van Ryn/Zucchi/Mai	Jain
QUANTITIES	Liao	E. Nichol

PREPARED FOR THE STATE OF CALIFORNIA DEPARTMENT OF TRANSPORTATION

Jal Birdy
PROJECT ENGINEER

BRIDGE NO. 34-0006 L/R
KILOMETER POST 12.8

SAN FRANCISCO OAKLAND BAY BRIDGE
EAST SPAN SEISMIC SAFETY PROJECT

YBI TRANSITION STRUCTURES

WESTBOUND GIRDER LAYOUT NO.1

Rev. Date: 5-18-98

ORIGINAL SCALE IN MILLIMETERS FOR REDUCED PLANS 0 10 20 30 40 50 60 70 80 90 100

CU 04251
EA 0120S1

DISREGARD PRINTS BEARING EARLIER REVISION DATES

REVISION DATES (PRELIMINARY STAGE ONLY) 9/13/01 01/23/08 3/3/08 9/29/09 5/30/02 2/14/03 3/3/06 10/4/06 1/24/07 6/28/07

SHEET 83 OF 209

FILE => 04-0120s1-34-006rl-l-g_lo02.add

Sept 29, 2009

USERNAME => trmikesl DATE PLOTTED => 15-OCT-2009 TIME PLOTTED => 10:57

DIST.	COUNTY	ROUTE	KILOMETER POST TOTAL PROJECT	SHEET NO.	TOTAL SHEETS
04	SF	80	12.7/13.2	638	806

REGISTERED ENGINEER - CIVIL

6-23-08
PLANS APPROVAL DATE

REGISTERED PROFESSIONAL ENGINEER A.L. ELY No. 18880 Exp. 6-30-09 CIVIL STATE OF CALIFORNIA

The State of California or its officers or agents shall not be responsible for the accuracy or completeness of electronic copies of this plan sheet.

T.Y. LIN / MOFFATT & NICHOL
TWO HARRISON STREET
SAN FRANCISCO, CA 94105

Caltrans Metric

LEGEND

500 Indicates girder stem width in mm

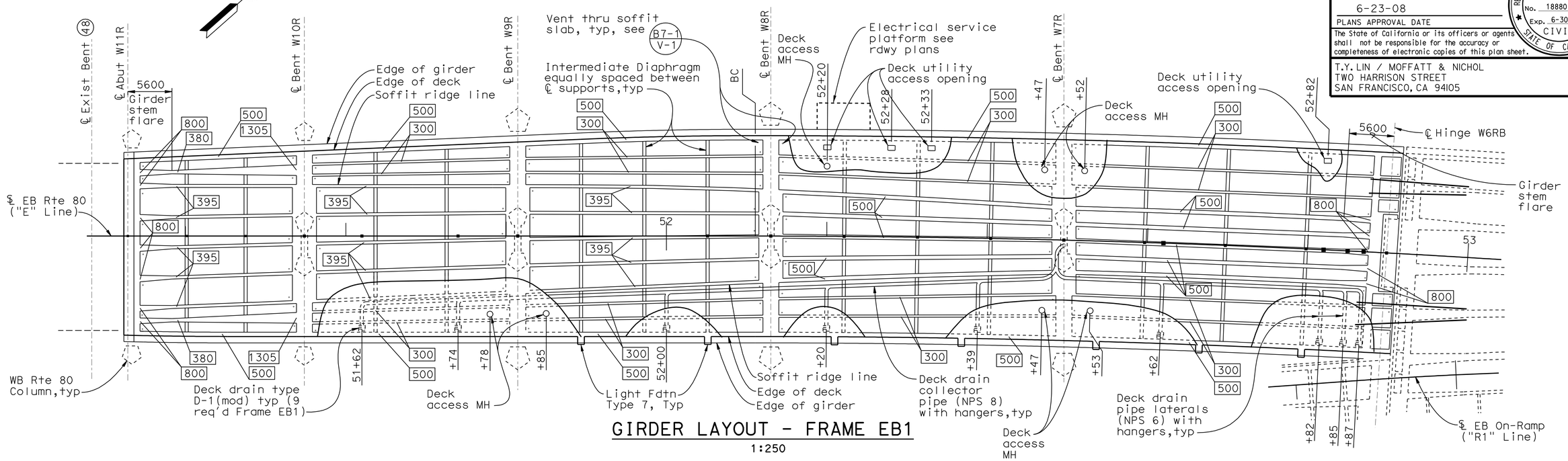

GIRDER LAYOUT - FRAME EB1

1:250

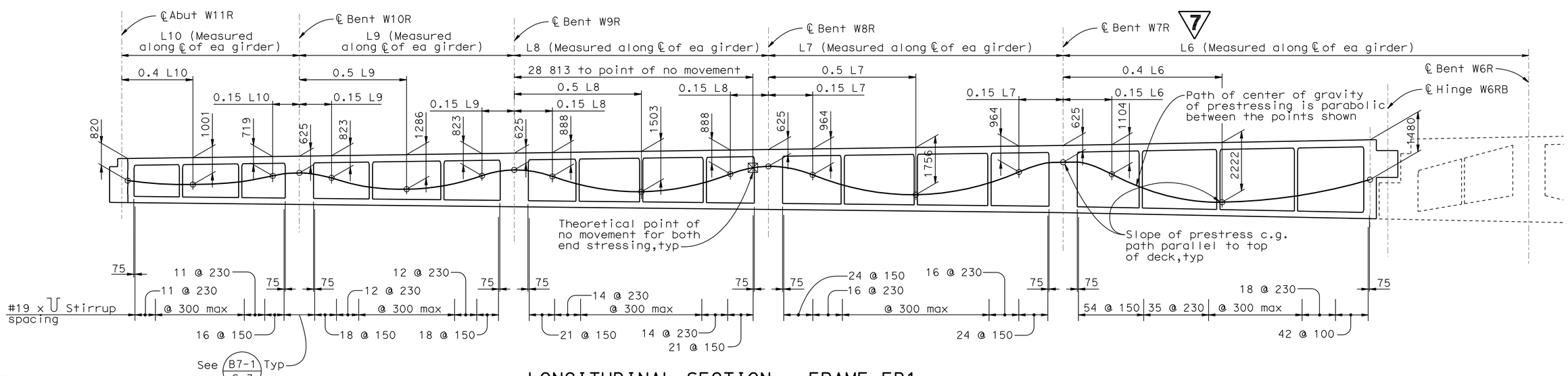

LONGITUDINAL SECTION - FRAME EB1
GIRDERS BETWEEN SOFFIT RIDGE LINES

No Scale

7 **REVISED PER ADDENDUM No. 7 DATED OCTOBER 19, 2009**

ALL DIMENSIONS ARE IN MILLIMETERS UNLESS OTHERWISE SHOWN

DESIGN OVERSIGHT
JOHN MOOK, BERNARD CHAN, JUAN F. CARPIO
March 3, 2008
SIGN OFF DATE

Rev. Date: 5-18-98

	BY	CHECKED
DESIGN	Cavafian	Shangkuan
DETAILS	van Ryn/Zucchi/Mai	Jain
QUANTITIES	Liao	E. Nichol

ORIGINAL SCALE IN MILLIMETERS FOR REDUCED PLANS 0 10 20 30 40 50 60 70 80 90 100

PREPARED FOR THE STATE OF CALIFORNIA DEPARTMENT OF TRANSPORTATION

Jal Birdy
PROJECT ENGINEER

BRIDGE NO. 34-0006 L/R
KILOMETER POST 12.8

CU 04251
EA 0120S1

DISREGARD PRINTS BEARING EARLIER REVISION DATES

REVISION DATES (PRELIMINARY STAGE ONLY) 9/13/07 01/31/08 3/3/08 8/28/09 9/29/09 2/24/03 3/3/06 10/27/06 1/24/07 6/25/07

SHEET 89 OF 209

SAN FRANCISCO OAKLAND BAY BRIDGE EAST SPAN SEISMIC SAFETY PROJECT

YBI TRANSITION STRUCTURES

EASTBOUND GIRDER LAYOUT NO.1

Sept 29, 2009

USERNAME => trmikesl DATE PLOTTED => 15-OCT-2009 TIME PLOTTED => 10:58

FILE => 04-0120s1-34-006r1-1-g_lo08.add

DIST.	COUNTY	ROUTE	KILOMETER POST TOTAL PROJECT	SHEET NO.	TOTAL SHEETS
04	SF	80	12.7/13.2	640	806

REGISTERED ENGINEER - CIVIL

6-23-08

PLANS APPROVAL DATE

REGISTERED PROFESSIONAL ENGINEER A.L. ELY No. 18880 Exp. 6-30-09 CIVIL STATE OF CALIFORNIA

The State of California or its officers or agents shall not be responsible for the accuracy or completeness of electronic copies of this plan sheet.

T.Y. LIN / MOFFATT & NICHOL
TWO HARRISON STREET
SAN FRANCISCO, CA 94105

Caltrans Metric

7 REVISED PER ADDENDUM No. 7 DATED OCTOBER 19, 2009

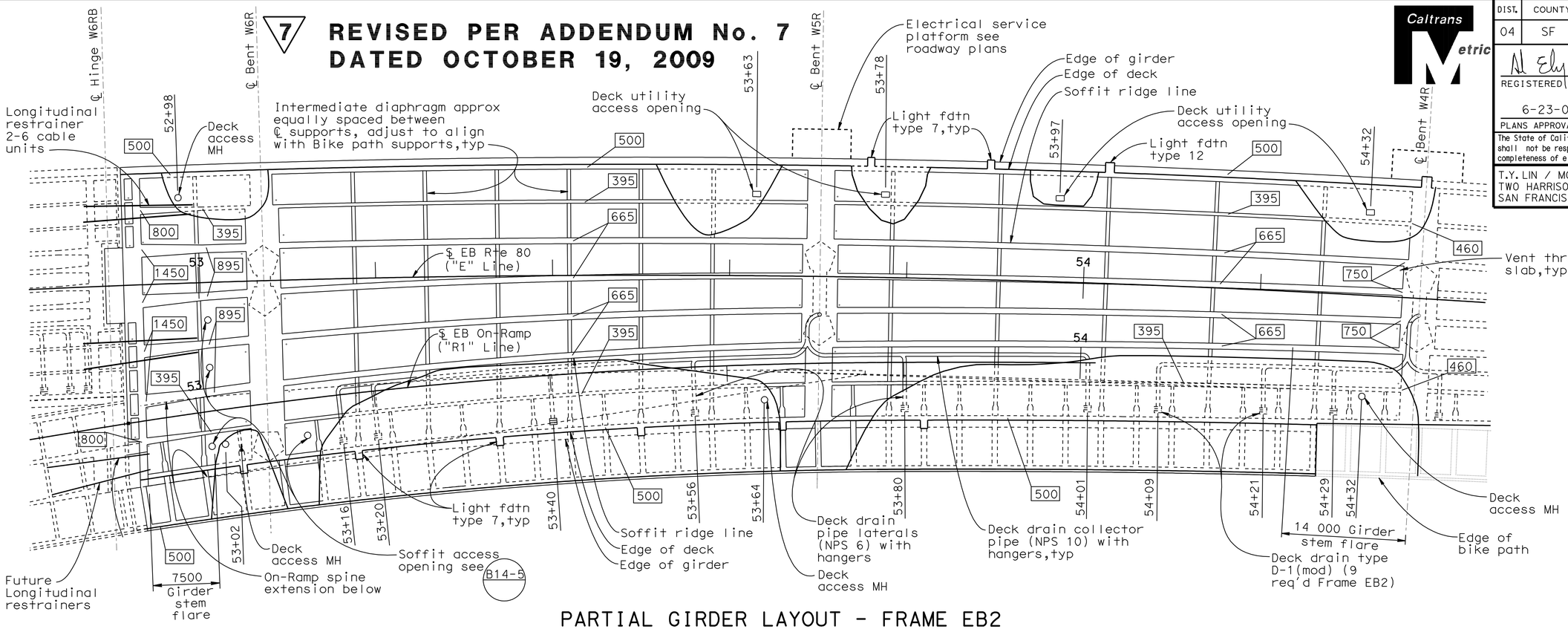

PARTIAL GIRDER LAYOUT - FRAME EB2

1:250

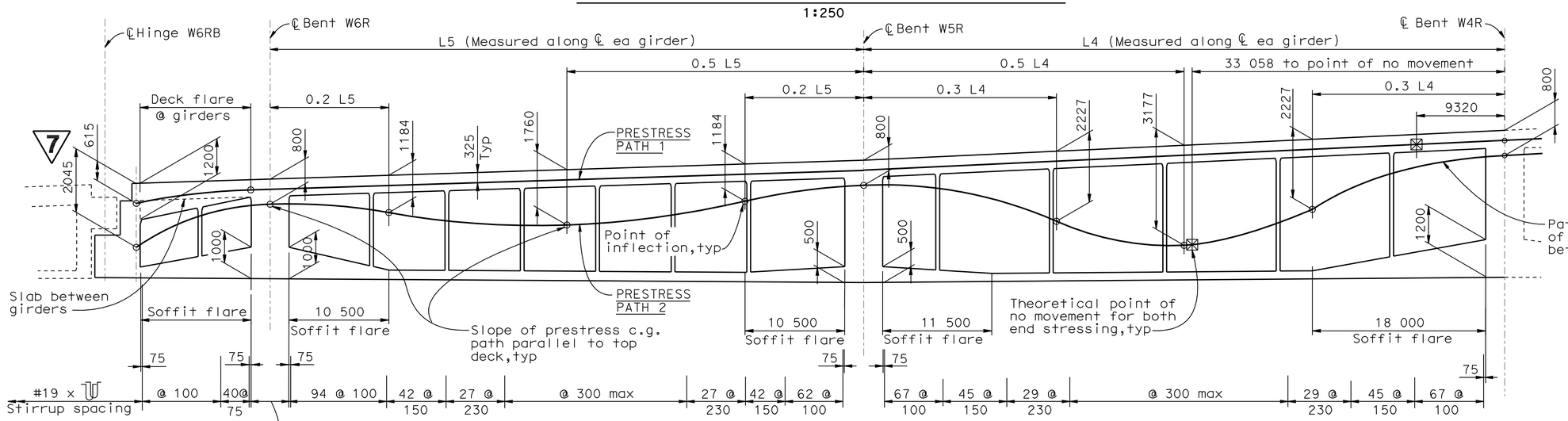

PARTIAL LONGITUDINAL SECTION - FRAME EB2
GIRDERS BETWEEN SOFFIT RIDGE LINES

No Scale

LEGEND

500 — Indicates girder stem width in mm

Note:
Soffit slab flares are between soffit ridge lines only.

ALL DIMENSIONS ARE IN MILLIMETERS UNLESS OTHERWISE SHOWN

DESIGN OVERSIGHT
JOHN MOOK, BERNARD CHAN, JUAN F. CARPIO
March 3, 2008
SIGN OFF DATE

Rev. Date: 5-18-98

	BY	CHECKED
DESIGN	Cavafian	Shangkuan
DETAILS	van Ryn/Zucchi/Mai	Jain
QUANTITIES	Liao	E. Nichol

PREPARED FOR THE STATE OF CALIFORNIA DEPARTMENT OF TRANSPORTATION

Jal Birdy
PROJECT ENGINEER

BRIDGE NO. 34-0006 L/R
KILOMETER POST 12.8

SAN FRANCISCO OAKLAND BAY BRIDGE
EAST SPAN SEISMIC SAFETY PROJECT

YBI TRANSITION STRUCTURES
EASTBOUND GIRDER LAYOUT NO.3

ORIGINAL SCALE IN MILLIMETERS FOR REDUCED PLANS 0 10 20 30 40 50 60 70 80 90 100

CU 04251
EA 0120S1

DISREGARD PRINTS BEARING EARLIER REVISION DATES

REVISION DATES (PRELIMINARY STAGE ONLY): 9/13/07 01/31/08 3/3/08 9/29/09 5/30/02 2/24/03 3/3/06 10/27/06 1/24/07 6/23/07

SHEET 91 OF 209

FILE => 04-0120s1-34-006r1-1-g_lo10.add

Sept 29, 2009

USERNAME => trmikesl DATE PLOTTED => 15-OCT-2009 TIME PLOTTED => 10:58

DIST.	COUNTY	ROUTE	KILOMETER POST TOTAL PROJECT	SHEET NO.	TOTAL SHEETS
04	SF	80	12.7/13.2	646	806

Caltrans Metric

REGISTERED ENGINEER - CIVIL

6-23-08
PLANS APPROVAL DATE

REGISTERED PROFESSIONAL ENGINEER A.L. ELY No. 18880 Exp. 6-30-09 CIVIL STATE OF CALIFORNIA

The State of California or its officers or agents shall not be responsible for the accuracy or completeness of electronic copies of this plan sheet.

T.Y. LIN / MOFFATT & NICHOL
TWO HARRISON STREET
SAN FRANCISCO, CA 94105

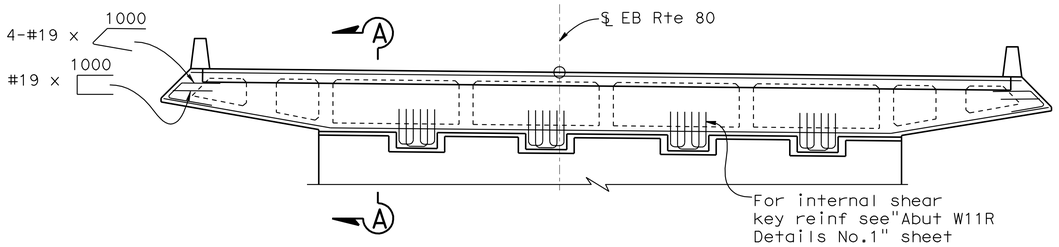

END DIAPHRAGM ELEVATION - ABUT W11R
1:80

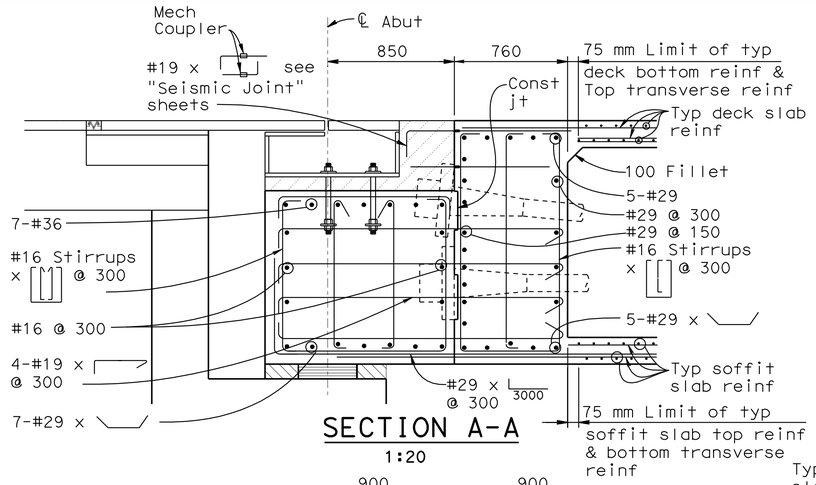

SECTION A-A
1:20

Note: For grillage at prestress anchorage see B8-5

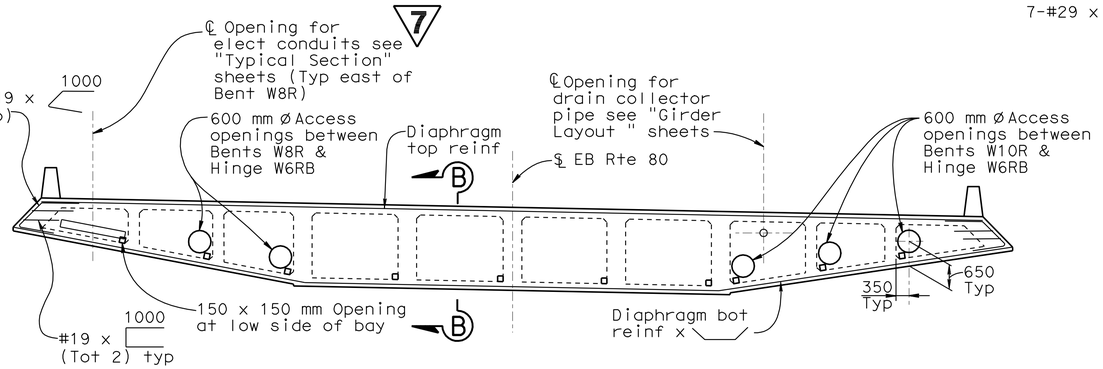

INTERMEDIATE DIAPHRAGM ELEVATION - FRAME EB1
1:80

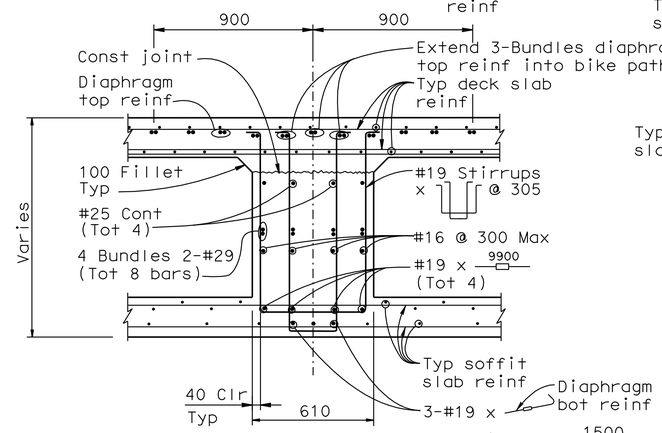

SECTION D-D
1:15

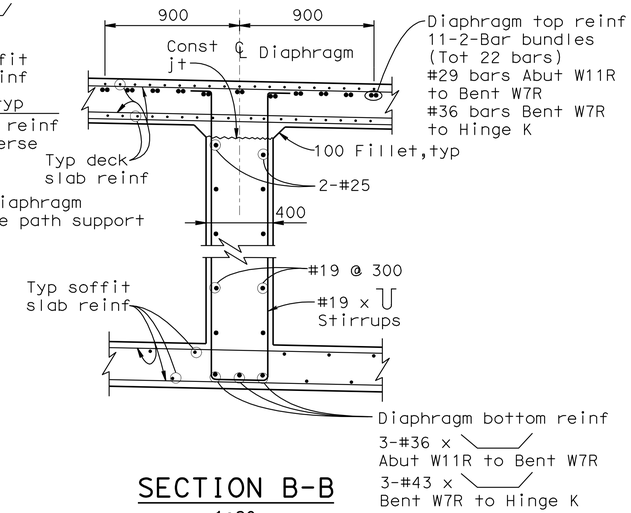

SECTION B-B
1:20

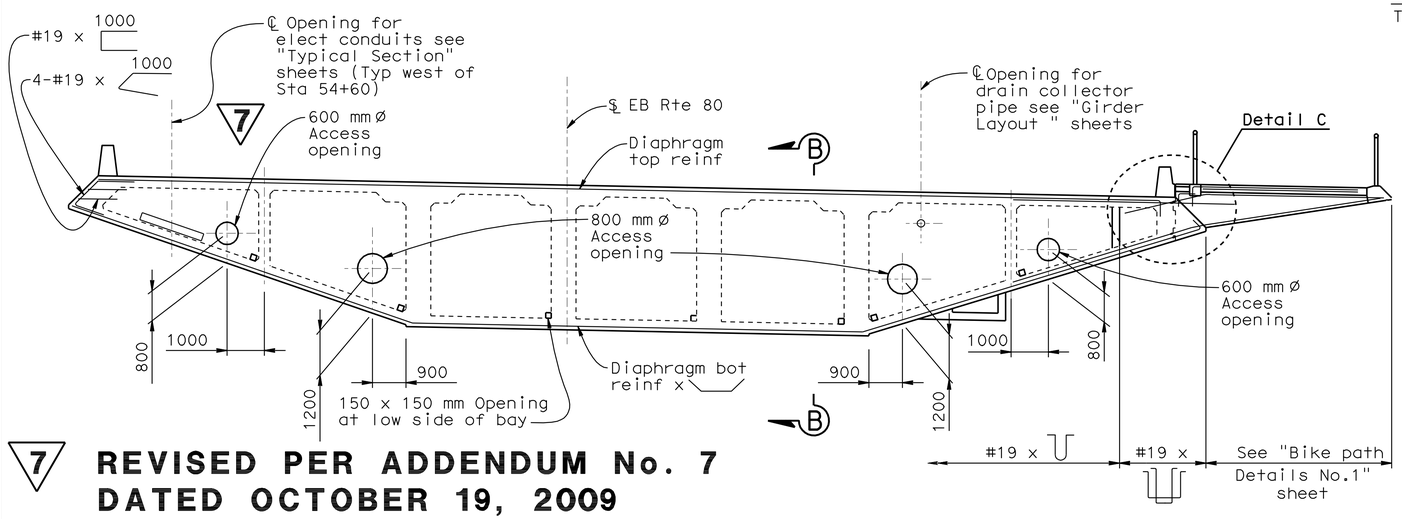

7 **REVISED PER ADDENDUM No. 7 DATED OCTOBER 19, 2009**

INTERMEDIATE DIAPHRAGM ELEVATION - FRAME EB2
1:80

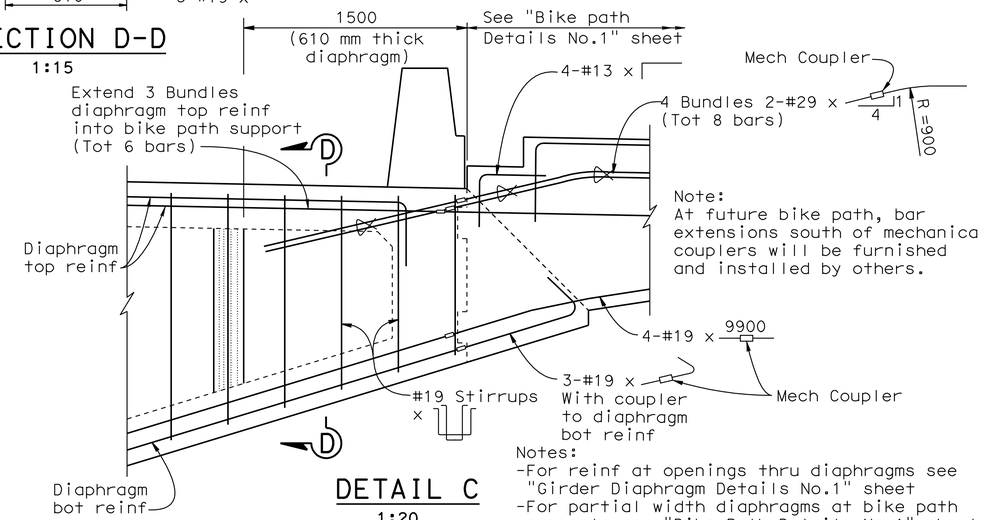

DETAIL C
1:20

Notes:
-For reinf at openings thru diaphragms see "Girder Diaphragm Details No.1" sheet
-For partial width diaphragms at bike path supports see "Bike Path Details No.1" sheet

ALL DIMENSIONS ARE IN MILLIMETERS UNLESS OTHERWISE SHOWN

DESIGN OVERSIGHT
JOHN MOOK, BERNARD CHAN, JUAN F. CARPIO
March 3, 2008
SIGN OFF DATE

Rev. Date: 5-18-98

DESIGN	BY Wang	CHECKED Greer	
DETAILS	BY van Ryn/Zucchi/Mai	CHECKED Jain	
QUANTITIES	BY Liao	CHECKED E. Nichol	

ORIGINAL SCALE IN MILLIMETERS FOR REDUCED PLANS 0 10 20 30 40 50 60 70 80 90 100

PREPARED FOR THE STATE OF CALIFORNIA DEPARTMENT OF TRANSPORTATION

Jal Birdy
PROJECT ENGINEER

BRIDGE NO. 34-0006 L/R
KILOMETER POST 12.8

SAN FRANCISCO OAKLAND BAY BRIDGE
EAST SPAN SEISMIC SAFETY PROJECT

YBI TRANSITION STRUCTURES
GIRDER DIAPHRAGM DETAILS NO.2

CU 04251
EA 0120S1

DISREGARD PRINTS BEARING EARLIER REVISION DATES

REVISION DATES (PRELIMINARY STAGE ONLY) 9/13/07 01/31/08 3/3/08 8/28/09 9/29/09 2/14/03 1/3/06 10/4/06 1/24/07 6/25/07

SHEET 97 OF 209

FILE => 04-0120s1-34-006rl-l-gdt03.add

Sept 29, 2009

USERNAME => trmikes1 DATE PLOTTED => 15-OCT-2009 TIME PLOTTED => 10:58

DIST.	COUNTY	ROUTE	KILOMETER POST TOTAL PROJECT	SHEET NO.	TOTAL SHEETS
04	SF	80	12.7/13.2	648	806

REGISTERED ENGINEER - CIVIL

6-23-08
PLANS APPROVAL DATE

REGISTERED PROFESSIONAL ENGINEER A.L. ELY No. 18880 Exp. 6-30-09 CIVIL STATE OF CALIFORNIA

The State of California or its officers or agents shall not be responsible for the accuracy or completeness of electronic copies of this plan sheet.

T.Y. LIN / MOFFATT & NICHOL
TWO HARRISON STREET
SAN FRANCISCO, CA 94105

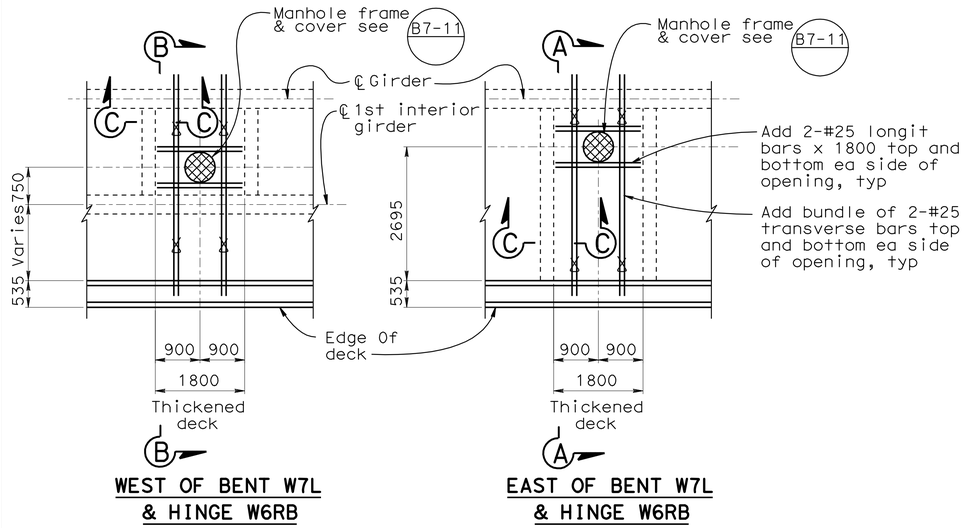

PLAN AT DECK ACCESS MANHOLES
1:60

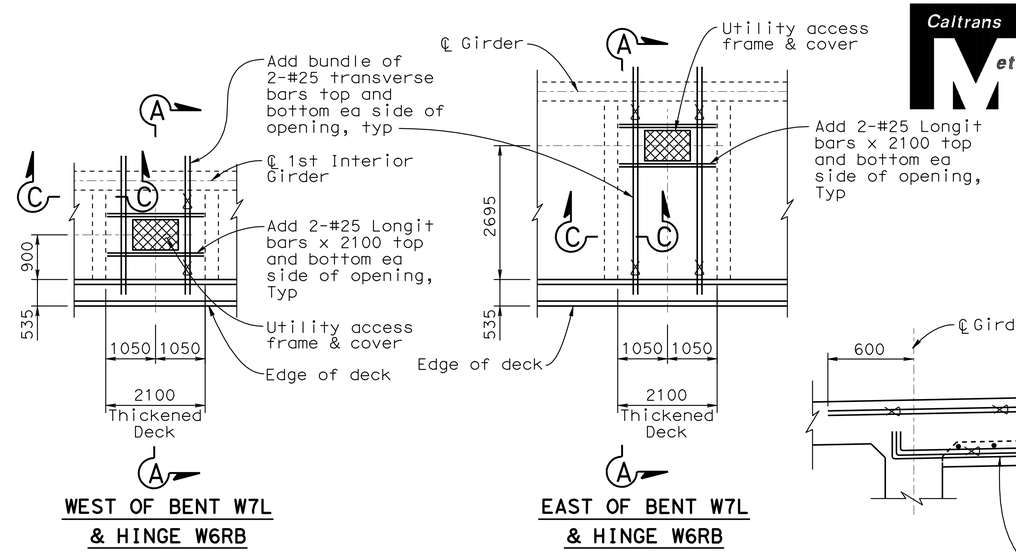

PLAN AT DECK UTILITY ACCESS OPENINGS
1:60

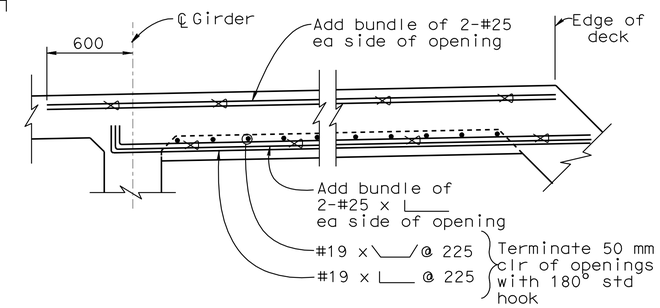

SECTION A-A
NO SCALE

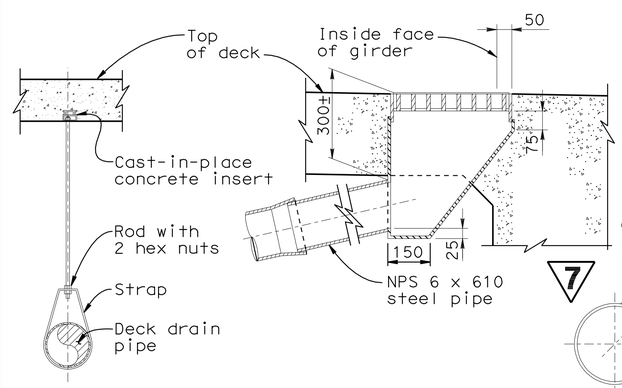

DECK DRAIN PIPE HANGER

DECK DRAIN TYPE D-2 (MOD)

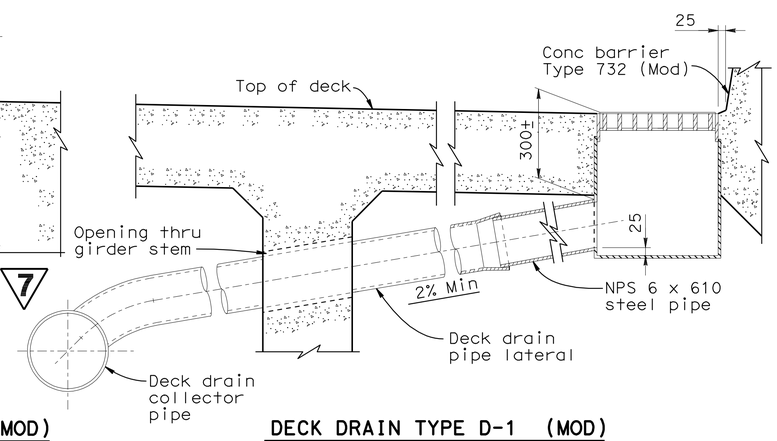

DECK DRAIN TYPE D-1 (MOD)

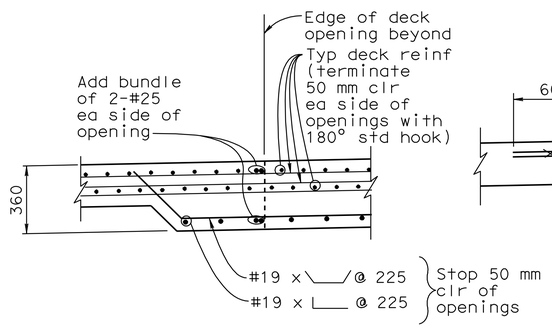

SECTION C-C
NO SCALE

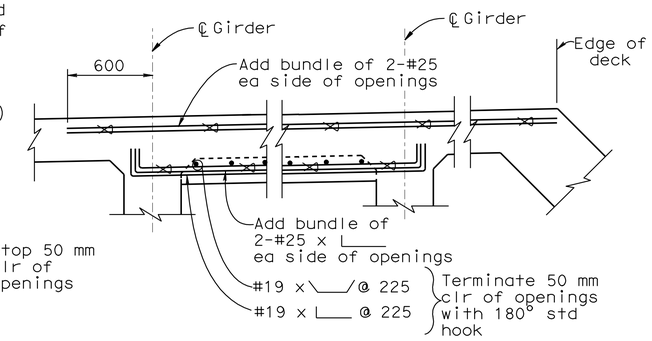

SECTION B-B
NO SCALE

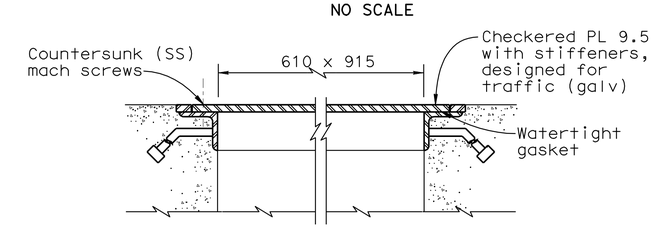

UTILITY ACCESS FRAME & COVER
NO SCALE

Notes:

1. For details not shown see B7-6
2. Drain pipes penetrating column reinf cages may require special (squashed) pipe fittings.
3. Provide cleanouts along collector pipes at 30 m max spacing, locations to be approved by Engr.

PIPE SIZE	WALL THICKNESS
NPS6	3.4 mm
NPS8	3.8 mm
NPS10	4.2 mm
NPS12	4.6 mm
NPS14	4.8 mm

PIPE SIZE	PIPE HANGER SPACING	HANGER ROD DIA	HANGER STRAP SIZE
NPS6	3 m	16 mm	4.8 x 38 mm
NPS8	3 m	19 mm	6.4 x 45 mm
NPS10	3 m	22 mm	9.5 x 45 mm
NPS12	3 m	22 mm	9.5 x 50 mm
NPS14	2.4 m	22 mm	12.7 x 50 mm

7 **REVISED PER ADDENDUM No. 7 DATED OCTOBER 19, 2009**

DECK DRAINAGE DETAILS
NO SCALE

ALL DIMENSIONS ARE IN MILLIMETERS UNLESS OTHERWISE SHOWN

DESIGN OVERSIGHT
JOHN MOOK, BERNARD CHAN, JUAN F. CARPIO
March 3, 2008
SIGN OFF DATE

Rev. Date: 5-18-98

DESIGN	BY Shangkuan	CHECKED Ahn	
DETAILS	BY van Ryn/Zucchi/Mai	CHECKED Jain	
QUANTITIES	BY Liao	CHECKED E. Nichol	

ORIGINAL SCALE IN MILLIMETERS FOR REDUCED PLANS 0 10 20 30 40 50 60 70 80 90 100

PREPARED FOR THE STATE OF CALIFORNIA DEPARTMENT OF TRANSPORTATION

Jal Birdy
PROJECT ENGINEER

BRIDGE NO. 34-0006 L/R
KILOMETER POST 12.8

CU 04251
EA 0120S1

DISREGARD PRINTS BEARING EARLIER REVISION DATES → 9/13/07 01/31/08 3/28/08 8/28/09 9/29/09 2/24/03 3/3/06 10/2/06 1/24/07 6/25/07

SAN FRANCISCO OAKLAND BAY BRIDGE
EAST SPAN SEISMIC SAFETY PROJECT

YBI TRANSITION STRUCTURES

MISC SUPERSTRUCTURE DETAILS NO.2

SHEET 99 OF 209

FILE => 04-0120s1-34-006r1-1-supdet02.add

Sept 29, 2009

USERNAME => trmikesl DATE PLOTTED => 15-OCT-2009 TIME PLOTTED => 10:59

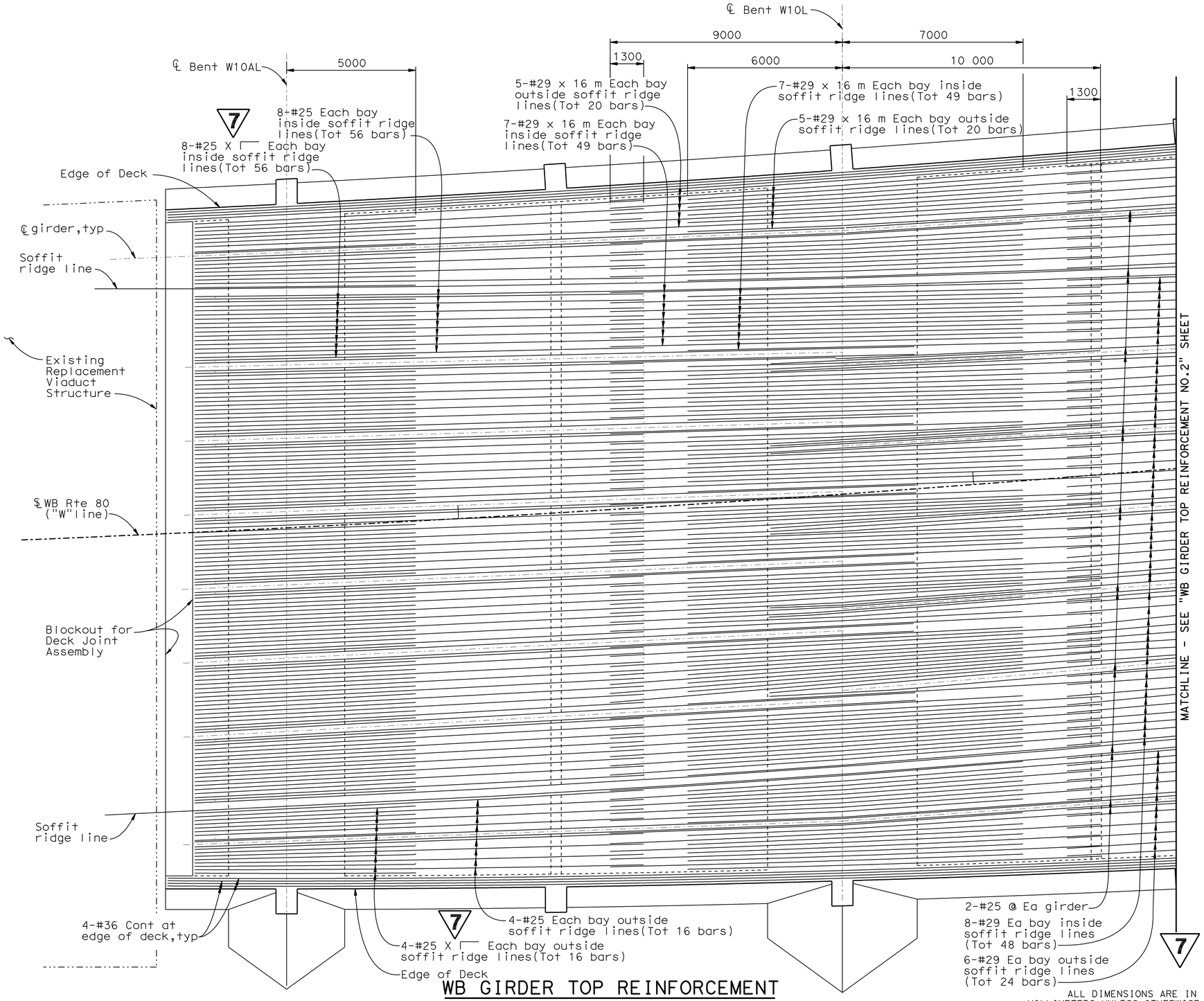

WB GIRDER TOP REINFORCEMENT

1:80

ALL DIMENSIONS ARE IN MILLIMETERS UNLESS OTHERWISE SHOWN

REVISED PER ADDENDUM No. 7 DATED OCTOBER 19, 2009

DIST.	COUNTY	ROUTE	KILOMETER POST TOTAL PROJECT	SHEET NO.	TOTAL SHEETS
04	SF	80	12.7/13.2	649	806

REGISTERED ENGINEER - CIVIL

6-23-08

PLANS APPROVAL DATE

REGISTERED PROFESSIONAL ENGINEER A.L. ELY No. 18880 Exp. 6-30-09 CIVIL STATE OF CALIFORNIA

The State of California or its officers or agents shall not be responsible for the accuracy or completeness of electronic copies of this plan sheet.

T.Y. LIN / MOFFATT & NICHOL
TWO HARRISON STREET
SAN FRANCISCO, CA 94105

DESIGN OVERSIGHT
JOHN MOOK, BERNARD CHAN, JUAN F. CARPIO
March 3, 2008
SIGN OFF DATE

Rev. Date: 5-18-98

	BY	CHECKED
DESIGN	Jain	Desai
DETAILS	van Ryn/Zucchi/Mai	Jain
QUANTITIES	Liao	E. Nichol

PREPARED FOR THE STATE OF CALIFORNIA DEPARTMENT OF TRANSPORTATION

Jal Birdy
PROJECT ENGINEER

BRIDGE NO. 34-0006 L/R
KILOMETER POST 12.8

SAN FRANCISCO OAKLAND BAY BRIDGE
EAST SPAN SEISMIC SAFETY PROJECT

YBI TRANSITION STRUCTURES

WB GIRDER TOP REINFORCEMENT NO.1

ORIGINAL SCALE IN MILLIMETERS FOR REDUCED PLANS 0 10 20 30 40 50 60 70 80 90 100

CU 04251
EA 0120S1

DISREGARD PRINTS BEARING EARLIER REVISION DATES

REVISION DATES (PRELIMINARY STAGE ONLY) 9/13/07 01/31/08 3/13/08 8/28/09 9/29/09 2/14/05 7/3/06 10/2/06 1/24/07 6/25/07

SHEET 100 OF 209

FILE => 04-0120s1-34-006r1-m-gr_top01.add

Sept 29, 2009

USERNAME => trmikes1 DATE PLOTTED => 15-OCT-2009 TIME PLOTTED => 10:59

DIST.	COUNTY	ROUTE	KILOMETER POST TOTAL PROJECT	SHEET NO.	TOTAL SHEETS
04	SF	80	12.7/13.2	652	806

REGISTERED ENGINEER - CIVIL

6-23-08
PLANS APPROVAL DATE

REGISTERED PROFESSIONAL ENGINEER A.L. ELY No. 18880 Exp. 6-30-09 CIVIL STATE OF CALIFORNIA

The State of California or its officers or agents shall not be responsible for the accuracy or completeness of electronic copies of this plan sheet.

T.Y. LIN / MOFFATT & NICHOL
TWO HARRISON STREET
SAN FRANCISCO, CA 94105

Caltrans Metric

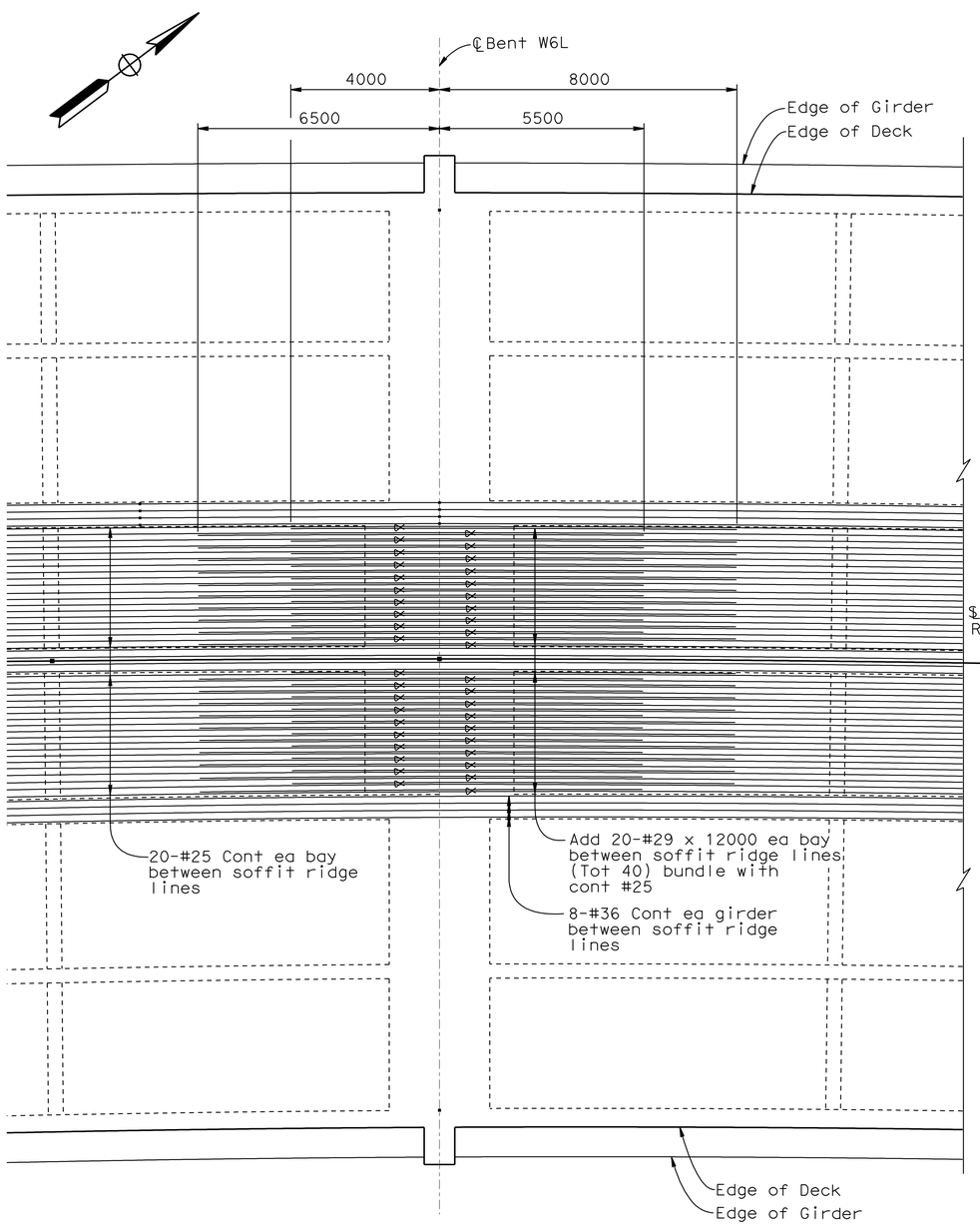

PLAN - WB GIRDER TOP REINFORCEMENT
AT BENT W6L
1:80

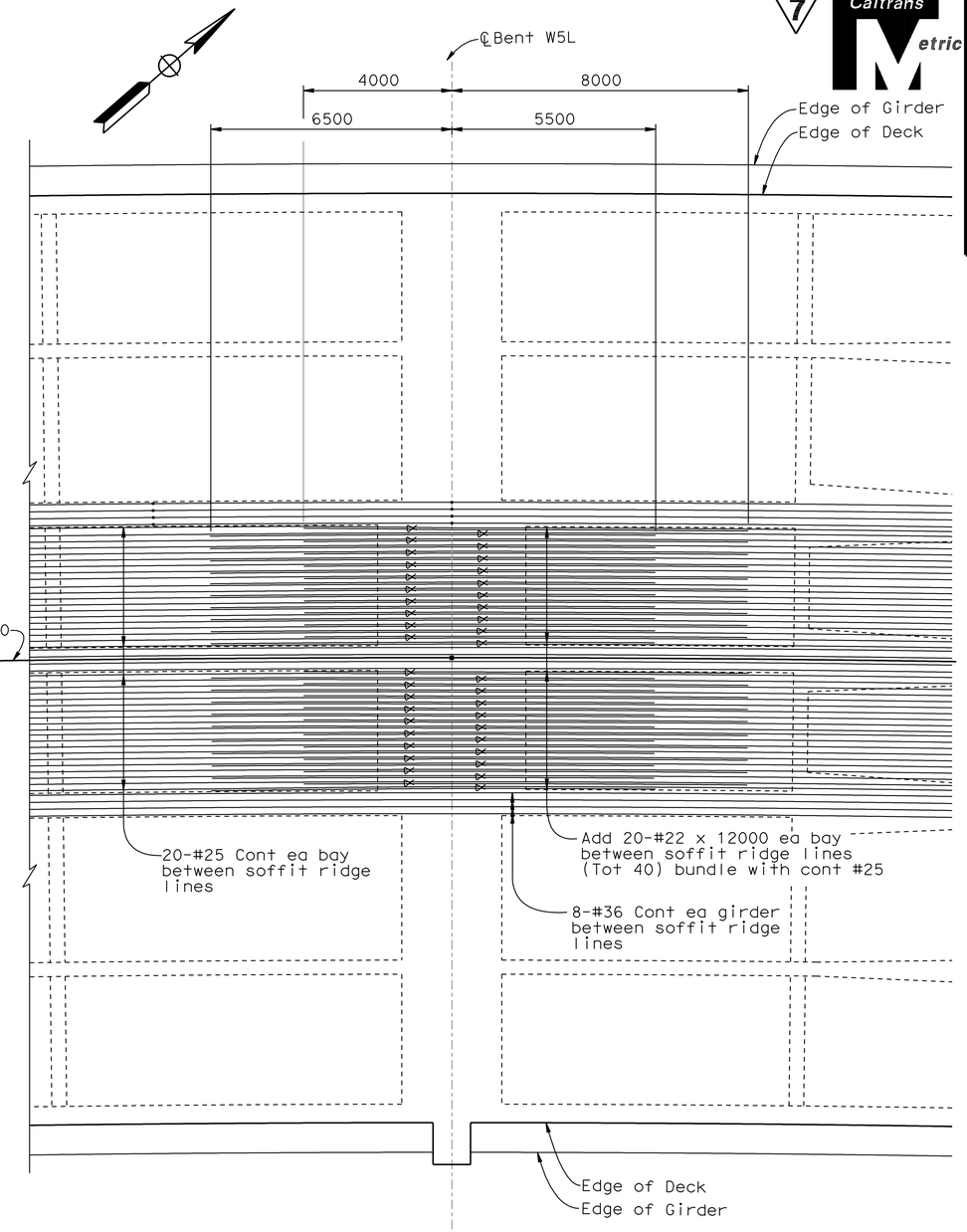

PLAN - WB GIRDER TOP REINFORCEMENT
AT BENT W5L
1:80

7 **REVISED PER ADDENDUM No. 7 DATED OCTOBER 19, 2009**

ALL DIMENSIONS ARE IN MILLIMETERS UNLESS OTHERWISE SHOWN

SAN FRANCISCO OAKLAND BAY BRIDGE
EAST SPAN SEISMIC SAFETY PROJECT

YBI TRANSITION STRUCTURES

WB GIRDER TOP REINFORCEMENT NO.4

DESIGN OVERSIGHT
JOHN MOOK, BERNARD CHAN, JUAN F. CARPIO
March 3, 2008
SIGN OFF DATE

	BY	CHECKED
DESIGN		
DETAILS	van Ryn/Zucchi/Mai	Jain
QUANTITIES	Liao	E. Nichol

PREPARED FOR THE STATE OF CALIFORNIA DEPARTMENT OF TRANSPORTATION

Jal Birdy
PROJECT ENGINEER

BRIDGE NO. 34-0006 L/R
KILOMETER POST 12.8

Rev. Date: 5-18-98

ORIGINAL SCALE IN MILLIMETERS FOR REDUCED PLANS 0 10 20 30 40 50 60 70 80 90 100

CU 04251
EA 0120S1

DISREGARD PRINTS BEARING EARLIER REVISION DATES → 9/13/07 01/24/08 3/24/08 8/28/09 9/29/09 2/24/03 7/3/06 10/4/06 1/24/07 6/26/07

SHEET 103 OF 209

FILE => 04-0120s1-34-006r1-m-gr_top04.add

Sept 29, 2009

USERNAME => tmikes1 DATE PLOTTED => 15-OCT-2009 TIME PLOTTED => 10:59

DIST.	COUNTY	ROUTE	KILOMETER POST TOTAL PROJECT	SHEET NO.	TOTAL SHEETS
04	SF	80	12.7/13.2	660	806

Caltrans Metric

REGISTERED ENGINEER - CIVIL

6-23-08
PLANS APPROVAL DATE

REGISTERED PROFESSIONAL ENGINEER A.L. ELY No. 18880 Exp. 6-30-09 CIVIL STATE OF CALIFORNIA

The State of California or its officers or agents shall not be responsible for the accuracy or completeness of electronic copies of this plan sheet.

T.Y. LIN / MOFFATT & NICHOL
TWO HARRISON STREET
SAN FRANCISCO, CA 94105

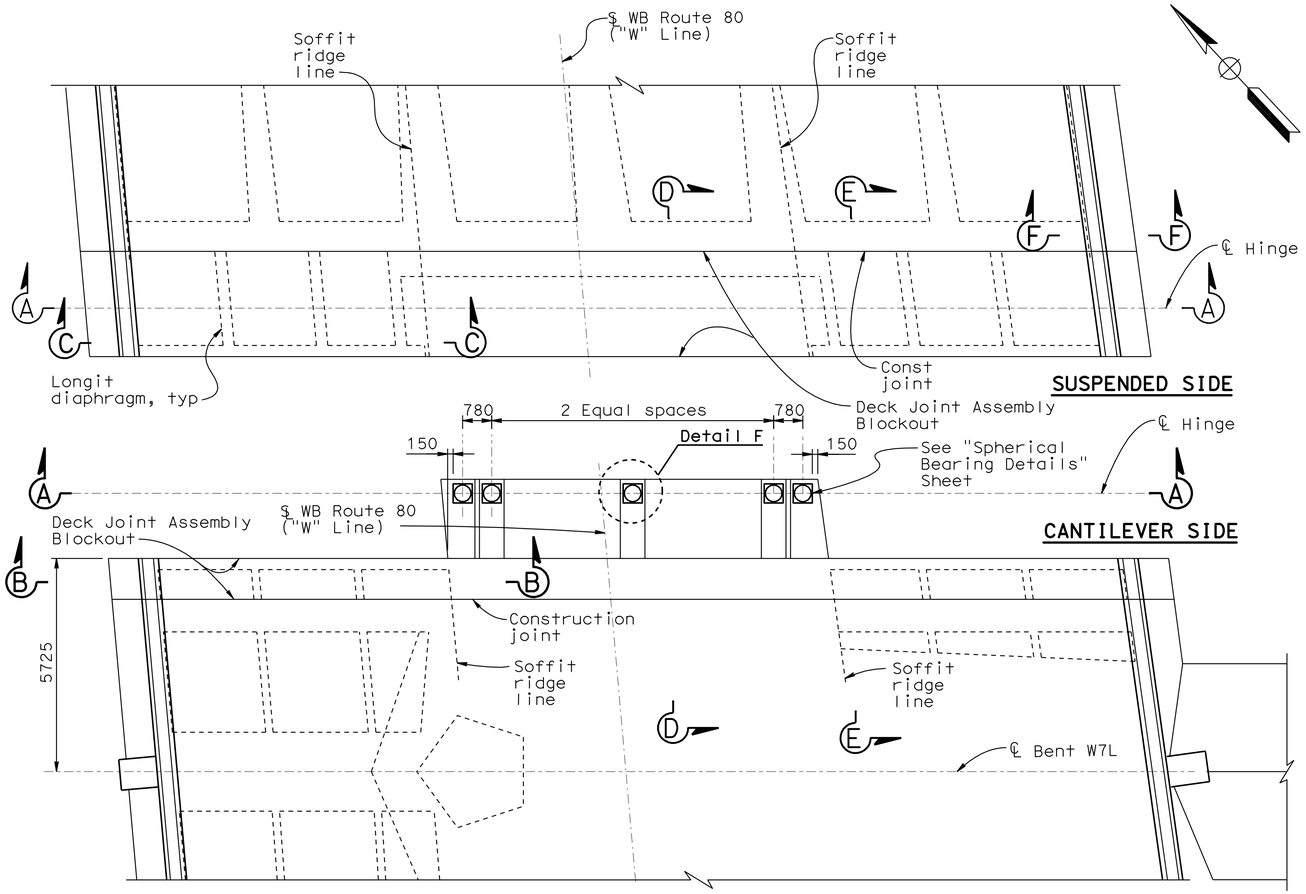

PLAN
1:80

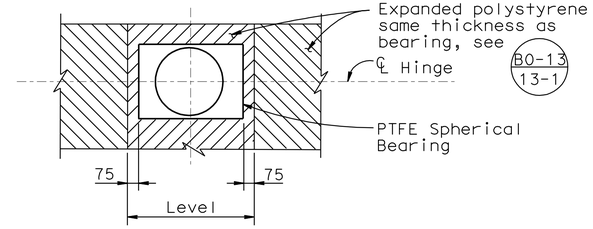

DETAIL F
No scale

Note: For sections B-B & C-C, see "Hinge W7LA Details No. 2" sheet, for Sections D-D, E-E, F-F & Detail K, see "Hinge W7LA Details No. 3" sheet.

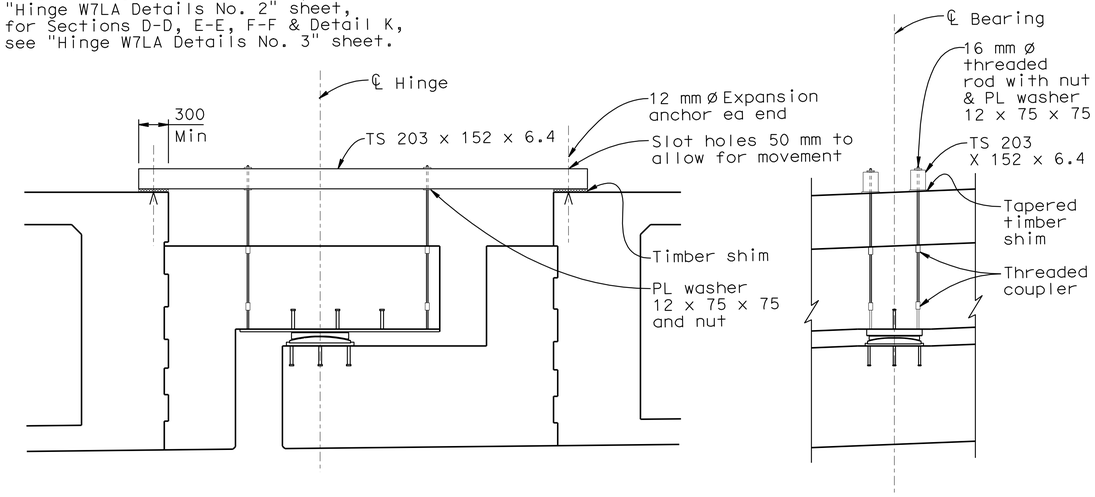

TEMPORARY BEARING SUPPORT
No scale

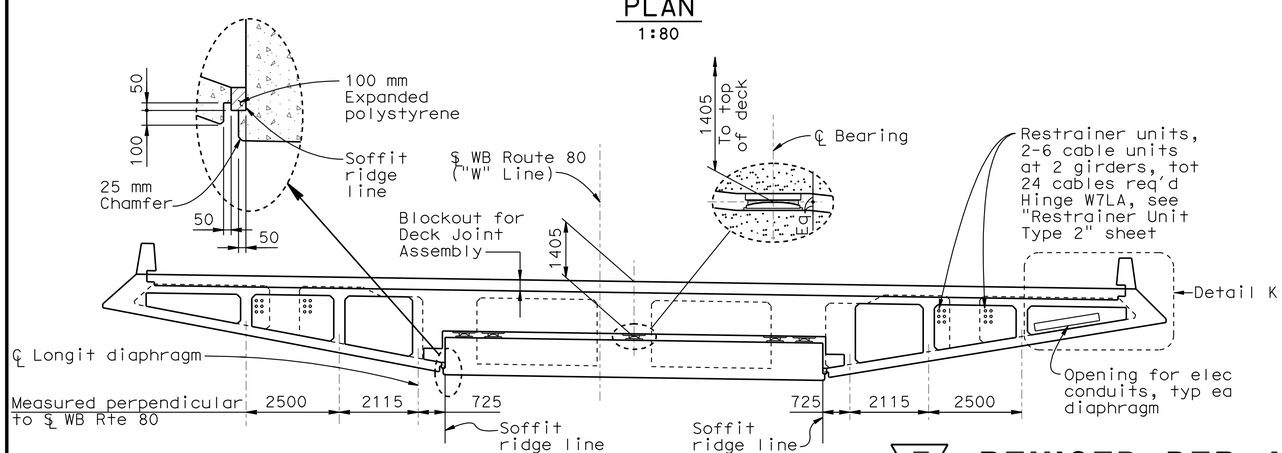

SECTION A-A
1:80

NOTES:

1. For dimension "a" see "Deck Joint Details" sheet.
2. To provide for free movement of the completed hinge, concrete is to be excluded from the joint by sealing all openings.
3. For protection of polystyrene see BO-13 13-1 & BO-13 13-2; vertical polystyrene (except above hinge seat) to be removed after construction.
4. Bars may be placed with hooks horizontal if required for clearance.
5. Reinforcement shall be spaced along ℄ of hinge and placed parallel to ℄ structure.
6. Hinge closure pour to be cast-in-place reinforced concrete same strength grade as cast-in-place prestressed concrete.
7. Lower portion (cantilever side) of hinge closure pour shall be cast first; upper portion of hinge closure pour to be placed after cantilever side is constructed and bearing assemblies are properly adjusted.
8. Falsework shall remain in place until closure pour concrete has attained a strength of at least 35 MPa

7 **REVISED PER ADDENDUM No. 7 DATED OCTOBER 19, 2009**

ALL DIMENSIONS ARE IN MILLIMETERS UNLESS OTHERWISE SHOWN

DESIGN OVERSIGHT
JOHN MOOK, BERNARD CHAN, JUAN F. CARPIO
March 3, 2008
SIGN OFF DATE

Rev. Date: 5-18-98

	BY	CHECKED
DESIGN	Lee	Atiqullah
DETAILS	van Ryn/Zucchi/Mai	Jain
QUANTITIES	Liao	E. Nichol

ORIGINAL SCALE IN MILLIMETERS FOR REDUCED PLANS 0 10 20 30 40 50 60 70 80 90 100

PREPARED FOR THE STATE OF CALIFORNIA DEPARTMENT OF TRANSPORTATION

Jal Birdy
PROJECT ENGINEER

BRIDGE NO. 34-0006 L/R
KILOMETER POST 12.8

CU 04251
EA 0120S1

SAN FRANCISCO OAKLAND BAY BRIDGE
EAST SPAN SEISMIC SAFETY PROJECT

YBI TRANSITION STRUCTURES

HINGE W7LA DETAILS NO.1

DISREGARD PRINTS BEARING EARLIER REVISION DATES

REVISION DATES (PRELIMINARY STAGE ONLY): 9/13/07 01/31/08 3/31/08 4/9/09 5/22/09 8/28/09 9/29/09 10/27/06 1/24/07 6/28/07

SHEET 111 OF 209

FILE => 04-0120s1-34-006rl-n-hingedt01.add

Sept 29, 2009

USERNAME => trmikesl DATE PLOTTED => 15-OCT-2009 TIME PLOTTED => 10:59

DIST.	COUNTY	ROUTE	KILOMETER POST TOTAL PROJECT	SHEET NO.	TOTAL SHEETS
04	SF	80	12.7/13.2	661	806

REGISTERED ENGINEER - CIVIL

6-23-08
PLANS APPROVAL DATE

REGISTERED PROFESSIONAL ENGINEER A.L. ELY No. 18880 Exp. 6-30-09 CIVIL STATE OF CALIFORNIA

The State of California or its officers or agents shall not be responsible for the accuracy or completeness of electronic copies of this plan sheet.

T.Y. LIN / MOFFATT & NICHOL
TWO HARRISON STREET
SAN FRANCISCO, CA 94105

Caltrans Metric

7

Note: For locations of Sections B-B & C-C see "Hinge W7LA Details No.1" sheet.

**Dimension measured perpendicular to ℄ Hinge.

Indicates polystyrene

Indicates concrete placed when deck joint installed

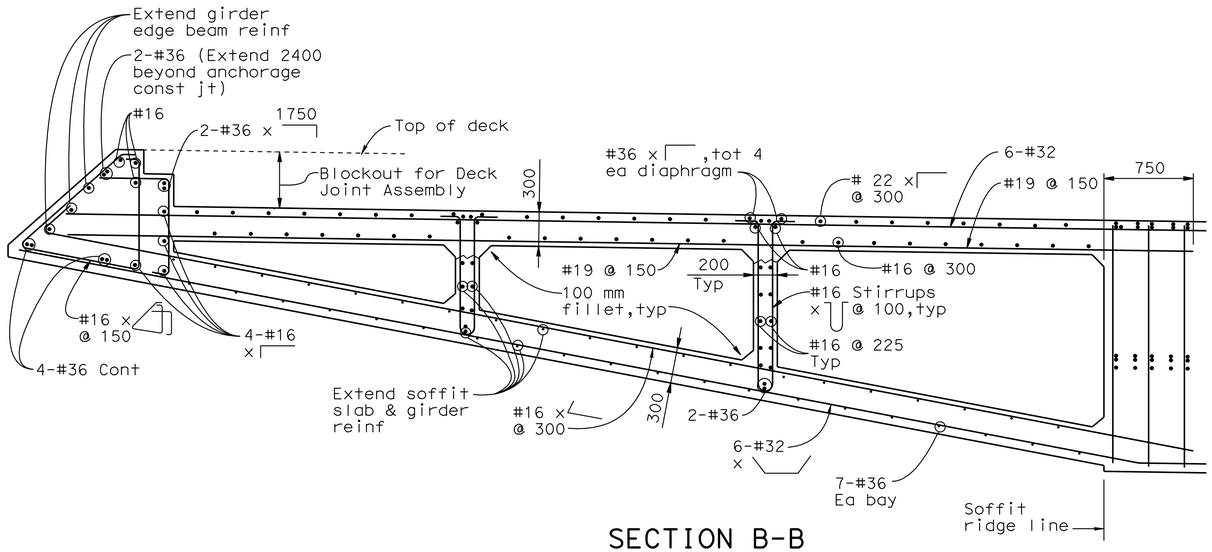

SECTION B-B
1:25

Note: For details not shown, see Section E-E, "Hinge W7LA Details No. 3" sheet.

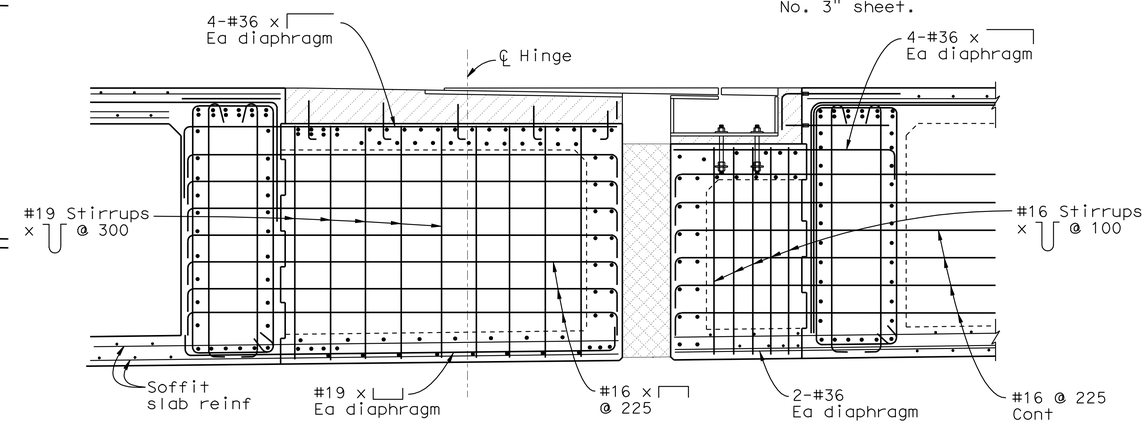

LONGITUDINAL DIAPHRAGM ELEVATION
1:25

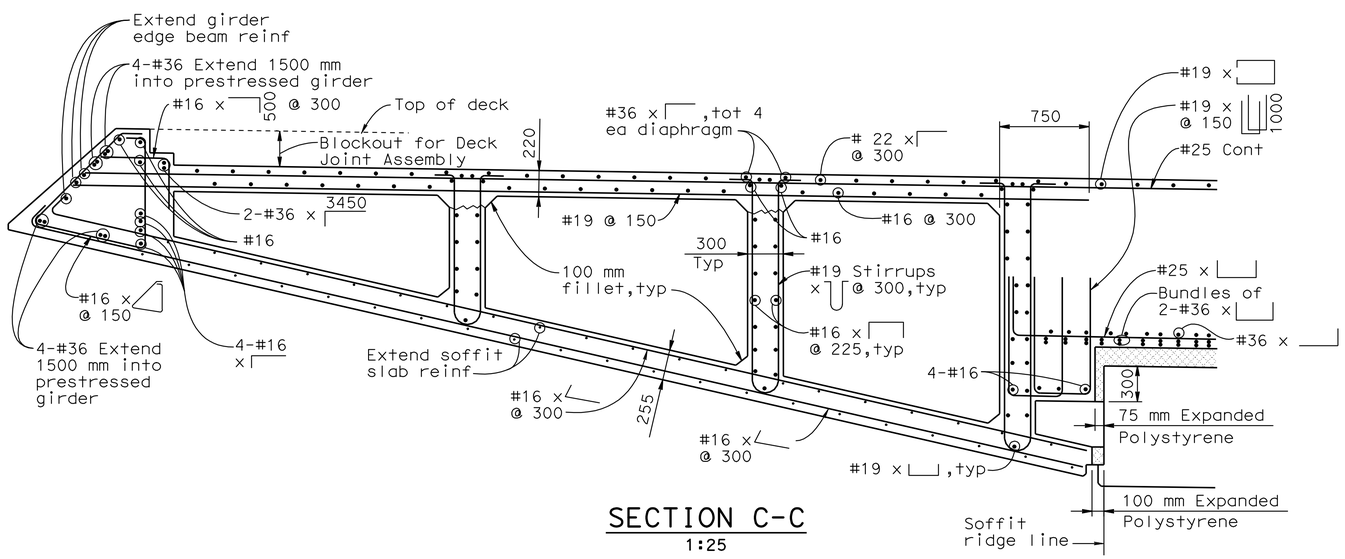

SECTION C-C
1:25

7 **REVISED PER ADDENDUM No. 7 DATED OCTOBER 19, 2009**

ALL DIMENSIONS ARE IN MILLIMETERS UNLESS OTHERWISE SHOWN

DESIGN OVERSIGHT
JOHN MOOK, BERNARD CHAN, JUAN F. CARPIO
March 3, 2008
SIGN OFF DATE

Rev. Date: 5-18-98

	BY	CHECKED
DESIGN	Lee	Atiqullah
DETAILS	van Ryn/Zucchi/Mai	Jain
QUANTITIES	Liao	E. Nichol

ORIGINAL SCALE IN MILLIMETERS FOR REDUCED PLANS 0 10 20 30 40 50 60 70 80 90 100

PREPARED FOR THE STATE OF CALIFORNIA DEPARTMENT OF TRANSPORTATION

Jal Birdy
PROJECT ENGINEER

BRIDGE NO. 34-0006 L/R
KILOMETER POST 12.8

CU 04251
EA 0120S1

DISREGARD PRINTS BEARING EARLIER REVISION DATES

REVISION DATES (PRELIMINARY STAGE ONLY): 9/13/07 01/31/08 3/31/08 5/22/09 8/28/09 9/29/09 1/3/06 10/2/06 1/24/07 6/25/07

SHEET 112 OF 209

SAN FRANCISCO OAKLAND BAY BRIDGE
EAST SPAN SEISMIC SAFETY PROJECT

YBI TRANSITION STRUCTURES

HINGE W7LA DETAILS NO.2

FILE => 04-0120s1-34-006r1-n-hingedt02.add

Sept 29, 2009

USERNAME => trmikest DATE PLOTTED => 15-OCT-2009 TIME PLOTTED => 10:59

DIST.	COUNTY	ROUTE	KILOMETER POST TOTAL PROJECT	SHEET NO.	TOTAL SHEETS
04	SF	80	12.7/13.2	662	806

REGISTERED ENGINEER - CIVIL

6-23-08

PLANS APPROVAL DATE

REGISTERED PROFESSIONAL ENGINEER A.L. ELY No. 18880 Exp. 6-30-09 CIVIL STATE OF CALIFORNIA

The State of California or its officers or agents shall not be responsible for the accuracy or completeness of electronic copies of this plan sheet.

T.Y. LIN / MOFFATT & NICHOL
TWO HARRISON STREET
SAN FRANCISCO, CA 94105

Note: For locations of Sections D-D & E-E, see "Hinge W7LA Details No.1" sheet.

** Dimension measured perpendicular to ℄ Hinge.

Indicates polystyrene

Indicates concrete placed when deck joint installed

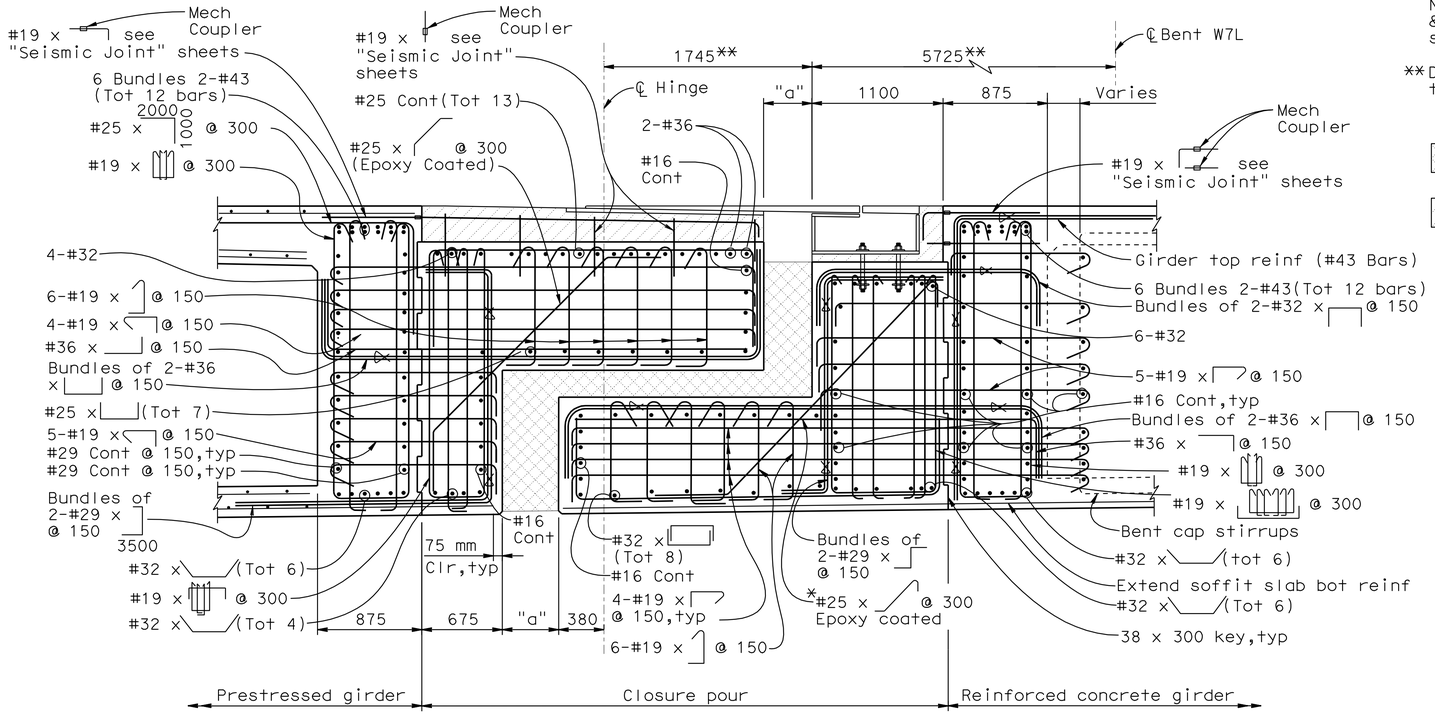

SECTION D-D
1:25

*Min concrete cover for #25 epoxy coated bar to be 25 mm clr from the corner

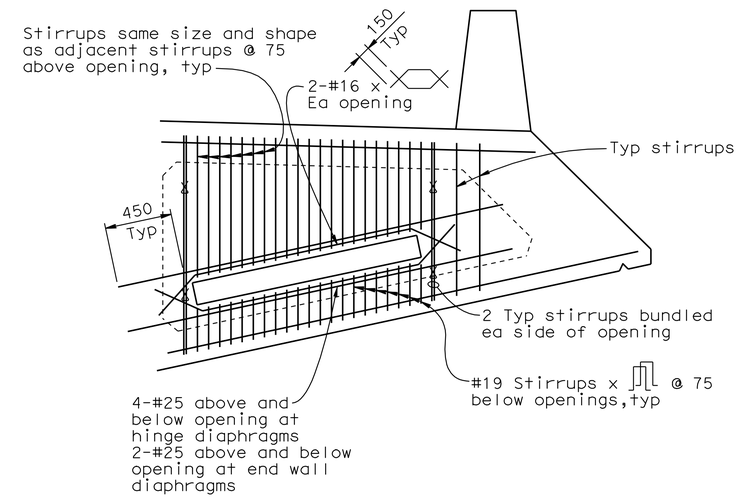

DETAIL K
(Typ reinf at opening for elec conduits)
No Scale

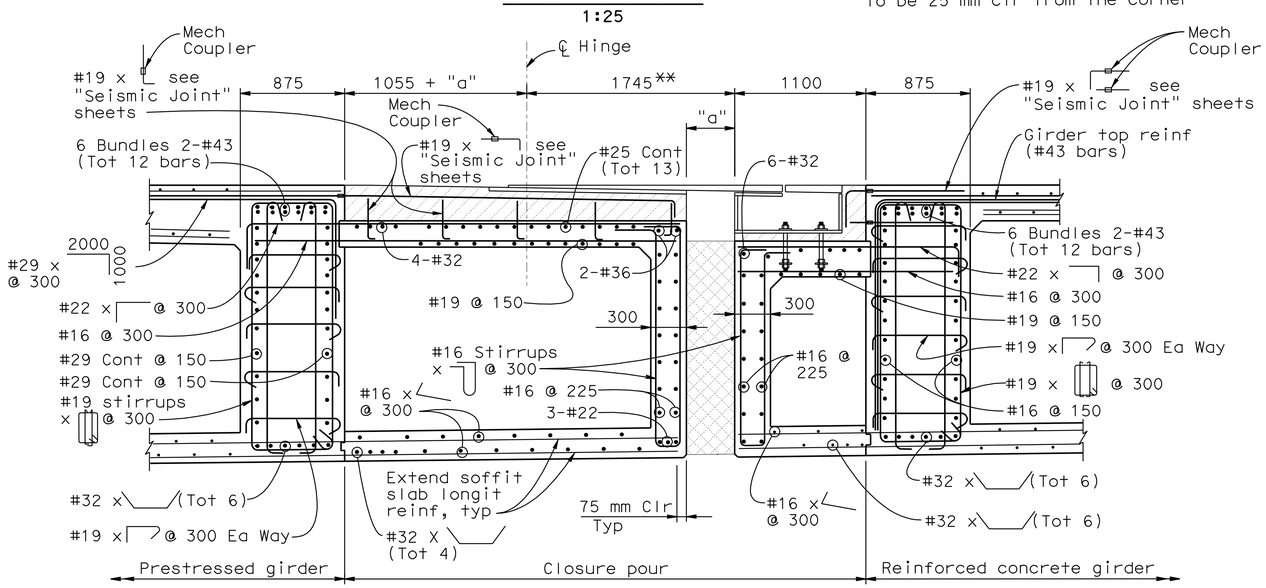

SUSPENDED SIDE

SECTION E-E
1:25

CANTILEVER SIDE

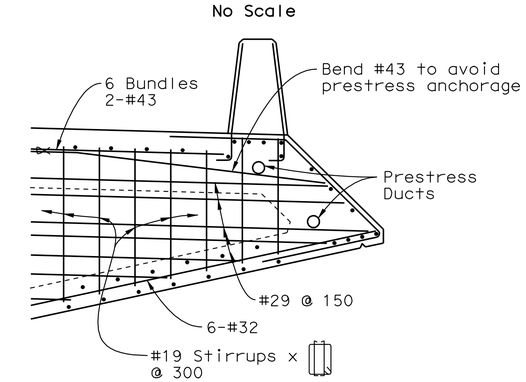

SECTION F-F
1:25

7 **REVISED PER ADDENDUM No. 7 DATED OCTOBER 19, 2009**

ALL DIMENSIONS ARE IN MILLIMETERS UNLESS OTHERWISE SHOWN

DESIGN OVERSIGHT
JOHN MOOK, BERNARD CHAN, JUAN F. CARPIO
March 3, 2008
SIGN OFF DATE

Rev. Date: 5-18-98

	BY	CHECKED
DESIGN	Lee	Atiqullah
DETAILS	van Ryn/Zucchi/Mai	Jain
QUANTITIES	Liao	E. Nichol

ORIGINAL SCALE IN MILLIMETERS FOR REDUCED PLANS 0 10 20 30 40 50 60 70 80 90 100

PREPARED FOR THE STATE OF CALIFORNIA DEPARTMENT OF TRANSPORTATION

Jal Birdy
PROJECT ENGINEER

BRIDGE NO. 34-0006 L/R
KILOMETER POST 12.8

CU 04251
EA 0120S1

SAN FRANCISCO OAKLAND BAY BRIDGE
EAST SPAN SEISMIC SAFETY PROJECT

YBI TRANSITION STRUCTURES

HINGE W7LA DETAILS NO.3

DISREGARD PRINTS BEARING EARLIER REVISION DATES

REVISION DATES (PRELIMINARY STAGE ONLY) 9/13/07 01/31/08 3/3/08 8/28/09 9/29/09 2/14/03 3/3/06 10/27/06 1/24/07 6/25/07

SHEET 113 OF 209

FILE => 04-0120s1-34-006rl-n-hinged+03.add

Sept 29, 2009

USERNAME => trmikesl DATE PLOTTED => 15-OCT-2009 TIME PLOTTED => 11:00

DIST.	COUNTY	ROUTE	KILOMETER POST TOTAL PROJECT	SHEET NO.	TOTAL SHEETS
04	SF	80	12.7/13.2	663	806

REGISTERED ENGINEER - CIVIL

6-23-08
PLANS APPROVAL DATE

REGISTERED PROFESSIONAL ENGINEER A.L. ELY No. 18880 Exp. 6-30-09 CIVIL STATE OF CALIFORNIA

The State of California or its officers or agents shall not be responsible for the accuracy or completeness of electronic copies of this plan sheet.

T.Y. LIN / MOFFATT & NICHOL
TWO HARRISON STREET
SAN FRANCISCO, CA 94105

Caltrans Metric

7

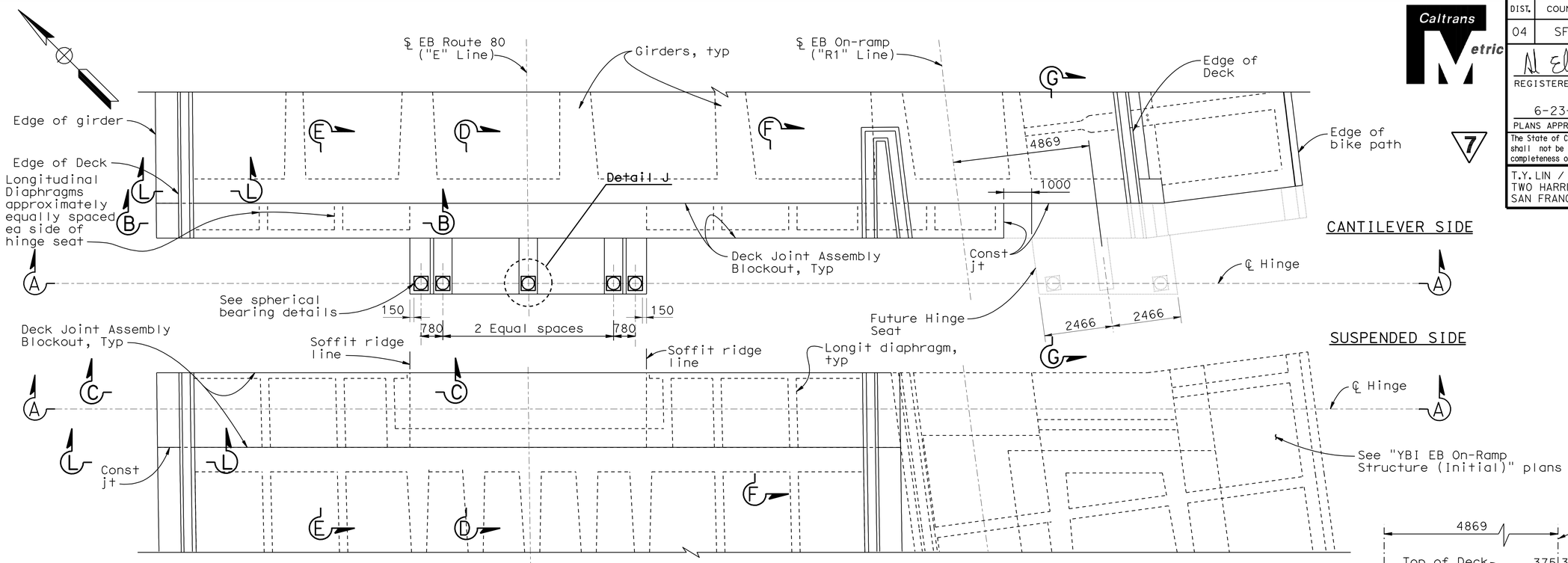

CANTILEVER SIDE

SUSPENDED SIDE

PLAN
1:80

Note: For Sections B-B and C-C, see "Hinge W6RB Details No. 2" sheet, for sections D-D, E-E, F-F & L-L, see "Hinge W6RB Details No. 3" sheet, for Section G-G, see "Hinge W6RB Details No. 4" sheet.

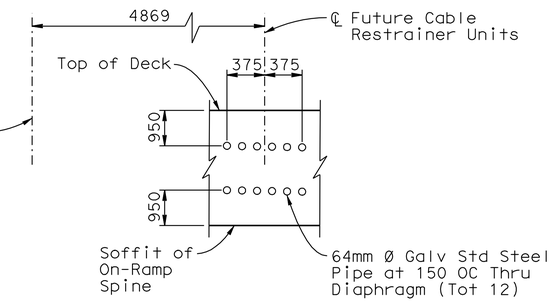

DETAIL H
No Scale

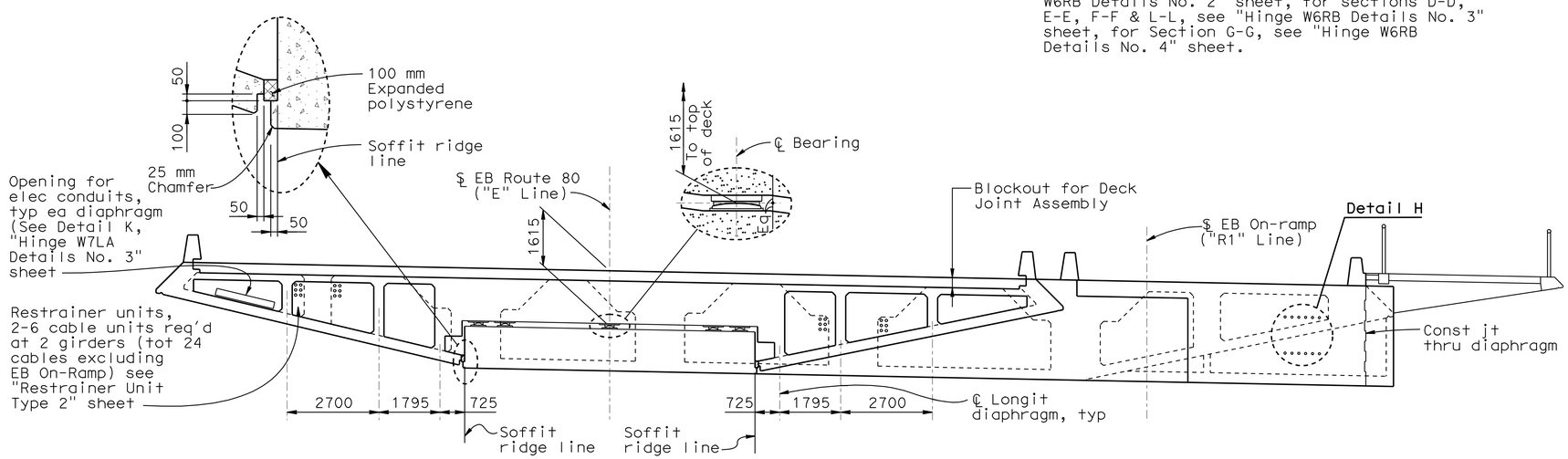

SECTION A-A
1:80

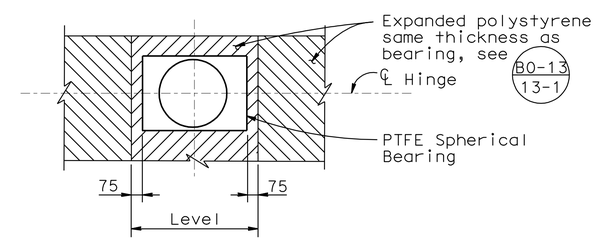

DETAIL J
No scale

ALL DIMENSIONS ARE IN MILLIMETERS UNLESS OTHERWISE SHOWN

7 **REVISED PER ADDENDUM No. 7 DATED OCTOBER 19, 2009**

DESIGN OVERSIGHT
JOHN MOOK, BERNARD CHAN, JUAN F. CARPIO
March 3, 2008
SIGN OFF DATE

Rev. Date: 5-18-98

	BY	CHECKED
DESIGN	Lee	Atiqullah
DETAILS	van Ryn/Zucchi/Mai	Jain
QUANTITIES	Liao	E. Nichol

PREPARED FOR THE STATE OF CALIFORNIA DEPARTMENT OF TRANSPORTATION

Jal Birdy
PROJECT ENGINEER

BRIDGE NO. 34-0006 L/R
KILOMETER POST 12.8

SAN FRANCISCO OAKLAND BAY BRIDGE
EAST SPAN SEISMIC SAFETY PROJECT

YBI TRANSITION STRUCTURES
HINGE W6RB DETAILS NO.1

ORIGINAL SCALE IN MILLIMETERS FOR REDUCED PLANS 0 10 20 30 40 50 60 70 80 90 100

CU 04251
EA 0120S1

DISREGARD PRINTS BEARING EARLIER REVISION DATES

REVISION DATES (PRELIMINARY STAGE ONLY): 9/13/07 01/31/08 3/3/08 8/28/09 9/29/09 2/14/05 7/3/06 10/4/06 1/24/07 6/25/07

SHEET 114 OF 209

FILE => 04-0120s1-34-006rl-n-hingedt04.add

Sept 29, 2009

USERNAME => trmikes1 DATE PLOTTED => 15-OCT-2009 TIME PLOTTED => 11:00

DIST.	COUNTY	ROUTE	KILOMETER POST TOTAL PROJECT	SHEET NO.	TOTAL SHEETS
04	SF	80	12.7/13.2	664	806

REGISTERED ENGINEER - CIVIL

6-23-08

PLANS APPROVAL DATE

REGISTERED PROFESSIONAL ENGINEER A.L. ELY No. 18880 Exp. 6-30-09 CIVIL STATE OF CALIFORNIA

The State of California or its officers or agents shall not be responsible for the accuracy or completeness of electronic copies of this plan sheet.

T.Y. LIN / MOFFATT & NICHOL
TWO HARRISON STREET
SAN FRANCISCO, CA 94105

Note: For locations of Sections B-B and C-C, see "Hinge W6RB Details No.1"sheet.

Indicates polystyrene

Indicates concrete placed when deck joint installed

7

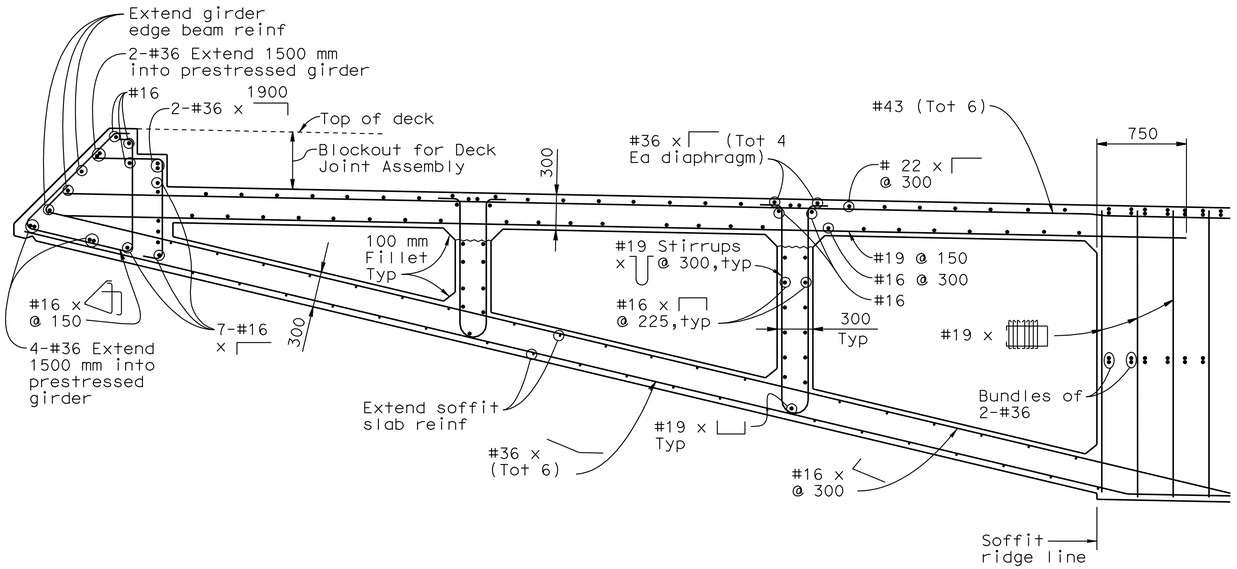

SECTION B-B
1:25

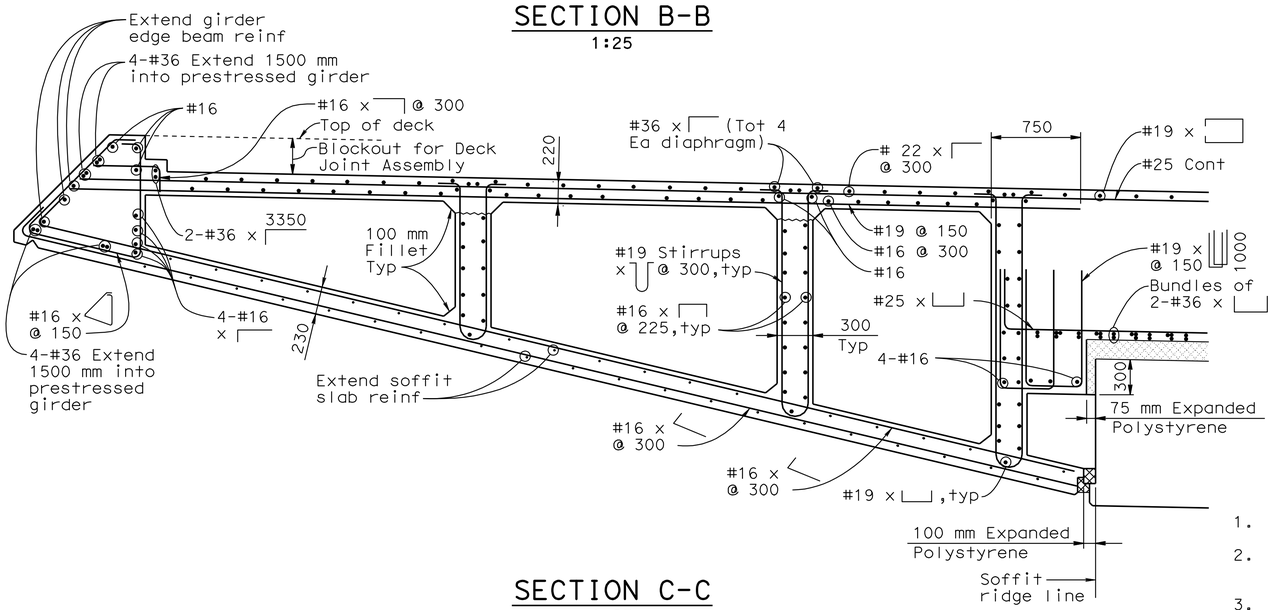

SECTION C-C
1:25

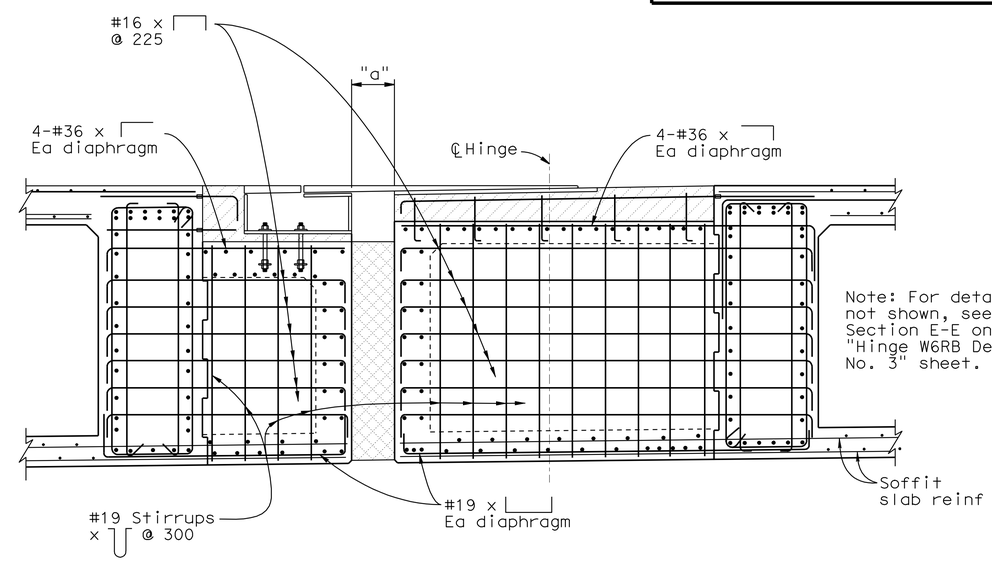

Note: For details not shown, see Section E-E on "Hinge W6RB Details No. 3" sheet.

LONGITUDINAL DIAPHRAGM ELEVATION
1:25

NOTES:

1. For dimension "a" see "Deck Joint Details" sheet.
2. To provide for free movement of the completed hinge, concrete is to be excluded from the joint by sealing all openings.
3. For protection of polystyrene see (B0-13 / 13-1) & (B0-13 / 13-2); vertical polystyrene (except above hinge seat) to be removed after construction.
4. Bars may be placed with hooks horizontal if required for clearance.
5. Reinforcement shall be spaced along ℄ of hinge and placed parallel to ℄ structure.
6. Hinge closure pour to be cast-in-place reinforced concrete same strength grade as cast-in-place prestressed concrete.
7. Lower portion (cantilever side) of hinge closure pour shall be cast first; upper portion of hinge closure pour to be placed after cantilever side is constructed and bearing assemblies are properly adjusted.
8. Falsework shall remain in place until closure pour concrete has attained a strength of at least 35 MPa.
9. For temporary bearing support see "Hinge W7LA Details No.1" sheet.

7 **REVISED PER ADDENDUM No. 7 DATED OCTOBER 19, 2009**

ALL DIMENSIONS ARE IN MILLIMETERS UNLESS OTHERWISE SHOWN

DESIGN OVERSIGHT
JOHN MOOK, BERNARD CHAN, JUAN F. CARPIO
March 3, 2008
SIGN OFF DATE

Rev. Date: 5-18-98

	BY	CHECKED
DESIGN	Lee	Atiqullah
DETAILS	van Ryn/Zucchi/Mai	Jain
QUANTITIES	Liao	E. Nichol

ORIGINAL SCALE IN MILLIMETERS FOR REDUCED PLANS 0 10 20 30 40 50 60 70 80 90 100

PREPARED FOR THE STATE OF CALIFORNIA DEPARTMENT OF TRANSPORTATION

Jal Birdy
PROJECT ENGINEER

CU 04251
EA 0120S1

BRIDGE NO. 34-0006 L/R
KILOMETER POST 12.8

SAN FRANCISCO OAKLAND BAY BRIDGE
EAST SPAN SEISMIC SAFETY PROJECT

YBI TRANSITION STRUCTURES

HINGE W6RB DETAILS NO.2

DISREGARD PRINTS BEARING EARLIER REVISION DATES

REVISION DATES (PRELIMINARY STAGE ONLY): 9/13/01 01/31/08 3/31/08 8/28/09 9/29/09 2/14/05 1/3/06 10/2/06 1/24/07 6/25/07

SHEET 115 OF 209

FILE => 04-0120s1-34-006r1-n-hingedt05.add

Sept 29, 2009

USERNAME => trmikest DATE PLOTTED => 15-OCT-2009 TIME PLOTTED => 11:00

DIST.	COUNTY	ROUTE	KILOMETER POST TOTAL PROJECT	SHEET NO.	TOTAL SHEETS
04	SF	80	12.7/13.2	665	806

REGISTERED ENGINEER - CIVIL

6-23-08

PLANS APPROVAL DATE

REGISTERED PROFESSIONAL ENGINEER A.L. ELY No. 18880 Exp. 6-30-09 CIVIL STATE OF CALIFORNIA

The State of California or its officers or agents shall not be responsible for the accuracy or completeness of electronic copies of this plan sheet.

T.Y. LIN / MOFFATT & NICHOL
TWO HARRISON STREET
SAN FRANCISCO, CA 94105

Caltrans Metric

7

Note: For locations of Sections D-D, E-E & F-F see "Hinge W6RB Details No.1"sheet.

Indicates polystyrene

Indicates concrete placed when deck joint installed

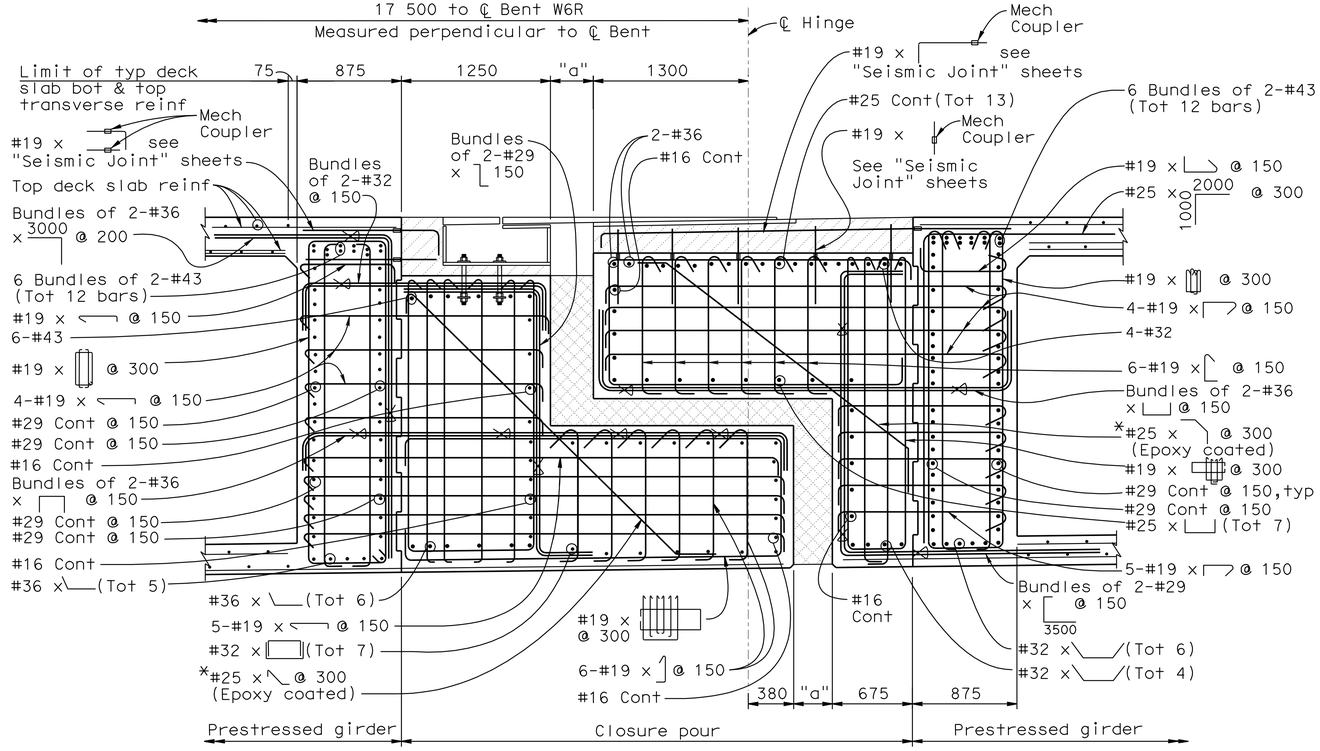

SECTION D-D
1:25

*Min concrete cover for #25 epoxy coated bar to be 25 mm clr from the corner

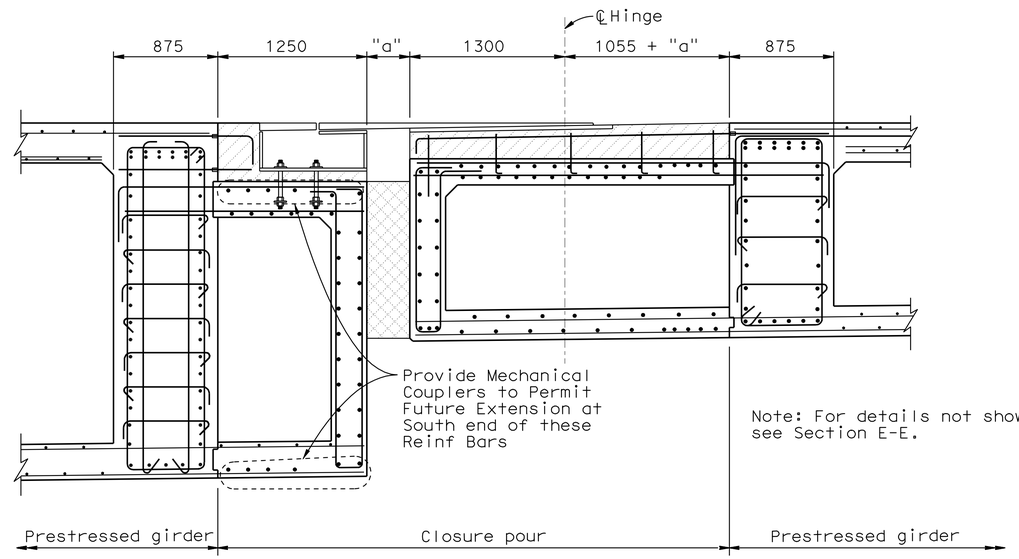

Note: For details not shown see Section E-E.

CANTILEVER SIDE

SUSPENDED SIDE

SECTION F-F
1:25

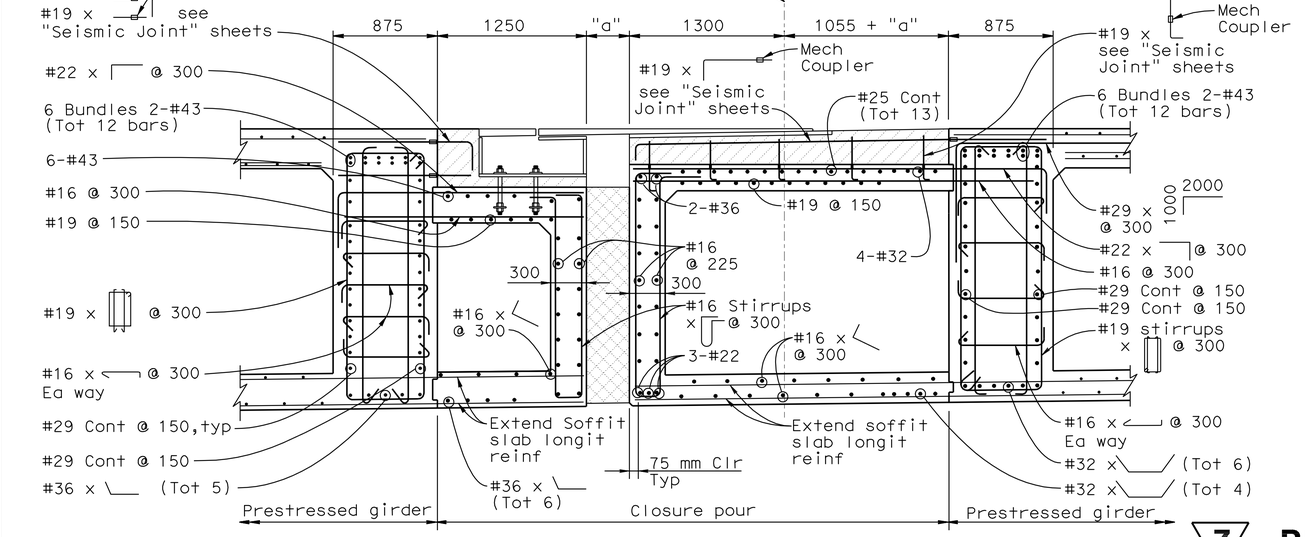

CANTILEVER SIDE

SECTION E-E
1:25

SUSPENDED SIDE

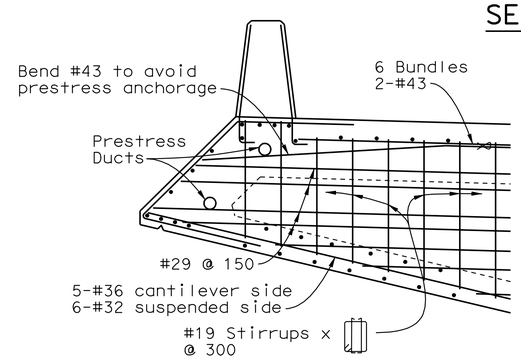

SECTION L-L
1:25

7

REVISED PER ADDENDUM No. 7 DATED OCTOBER 19, 2009

ALL DIMENSIONS ARE IN MILLIMETERS UNLESS OTHERWISE SHOWN

DESIGN OVERSIGHT
JOHN MOOK, BERNARD CHAN, JUAN F. CARPIO
March 3, 2008
SIGN OFF DATE

Rev. Date: 5-18-98

	BY	CHECKED
DESIGN	Lee	Atiqullah
DETAILS	van Ryn/Zucchi/Mai	Jain
QUANTITIES	Liao	E. Nichol

ORIGINAL SCALE IN MILLIMETERS FOR REDUCED PLANS 0 10 20 30 40 50 60 70 80 90 100

PREPARED FOR THE STATE OF CALIFORNIA DEPARTMENT OF TRANSPORTATION

Jal Birdy
PROJECT ENGINEER

CU 04251
EA 0120S1

BRIDGE NO. 34-0006 L/R
KILOMETER POST 12.8

DISREGARD PRINTS BEARING EARLIER REVISION DATES

REVISION DATES (PRELIMINARY STAGE ONLY): 9/13/07 01/31/08 3/31/08 5/22/09 8/28/09 9/29/09 1/3/06 10/2/06 1/24/07 6/25/07

SAN FRANCISCO OAKLAND BAY BRIDGE
EAST SPAN SEISMIC SAFETY PROJECT

YBI TRANSITION STRUCTURES

HINGE W6RB DETAILS NO.3

SHEET 116 OF 209

FILE => 04-0120s1-34-006rl-n-hingedt06.add

Sept 29, 2009

USERNAME => ttmikest DATE PLOTTED => 15-OCT-2009 TIME PLOTTED => 11:01

DIST.	COUNTY	ROUTE	KILOMETER POST TOTAL PROJECT	SHEET NO.	TOTAL SHEETS
04	SF	80	12.7/13.2	668	806

Caltrans Metric

REGISTERED ENGINEER - CIVIL

6-23-08
PLANS APPROVAL DATE

REGISTERED PROFESSIONAL ENGINEER A.L. ELY No. 18880 Exp. 6-30-09 CIVIL STATE OF CALIFORNIA

The State of California or its officers or agents shall not be responsible for the accuracy or completeness of electronic copies of this plan sheet.

T.Y. LIN / MOFFATT & NICHOL
TWO HARRISON STREET
SAN FRANCISCO, CA 94105

7

Indicates concrete placed when deck joint installed

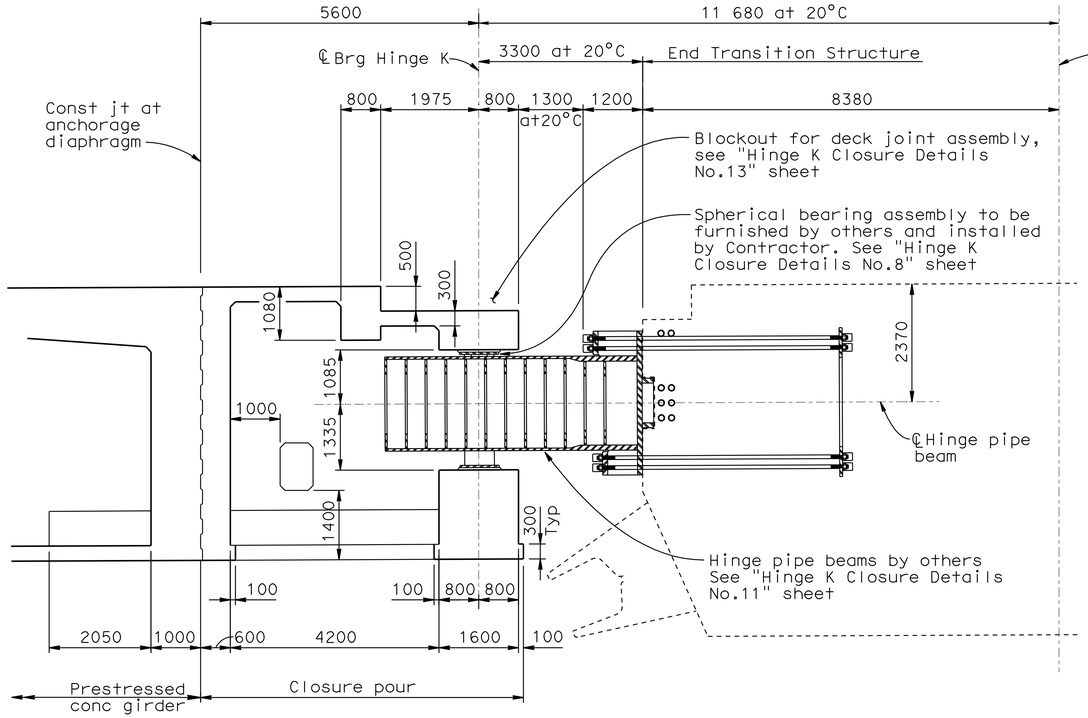

SECTION B-B - ADJACENT TO CENTRAL LONGIT DIAPHRAGM

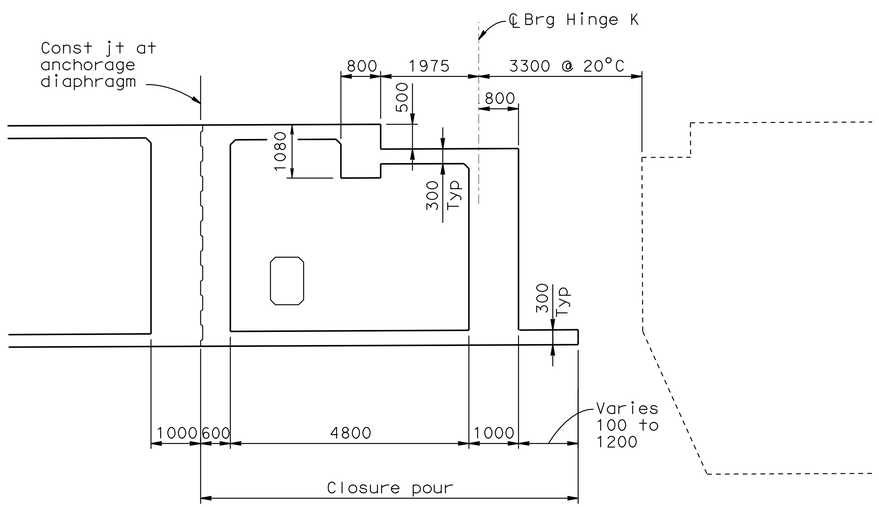

SECTION C-C - ADJACENT TO OUTER LONGIT DIAPHRAGM

LONGITUDINAL SECTIONS AT HINGE K CLOSURE

1:60

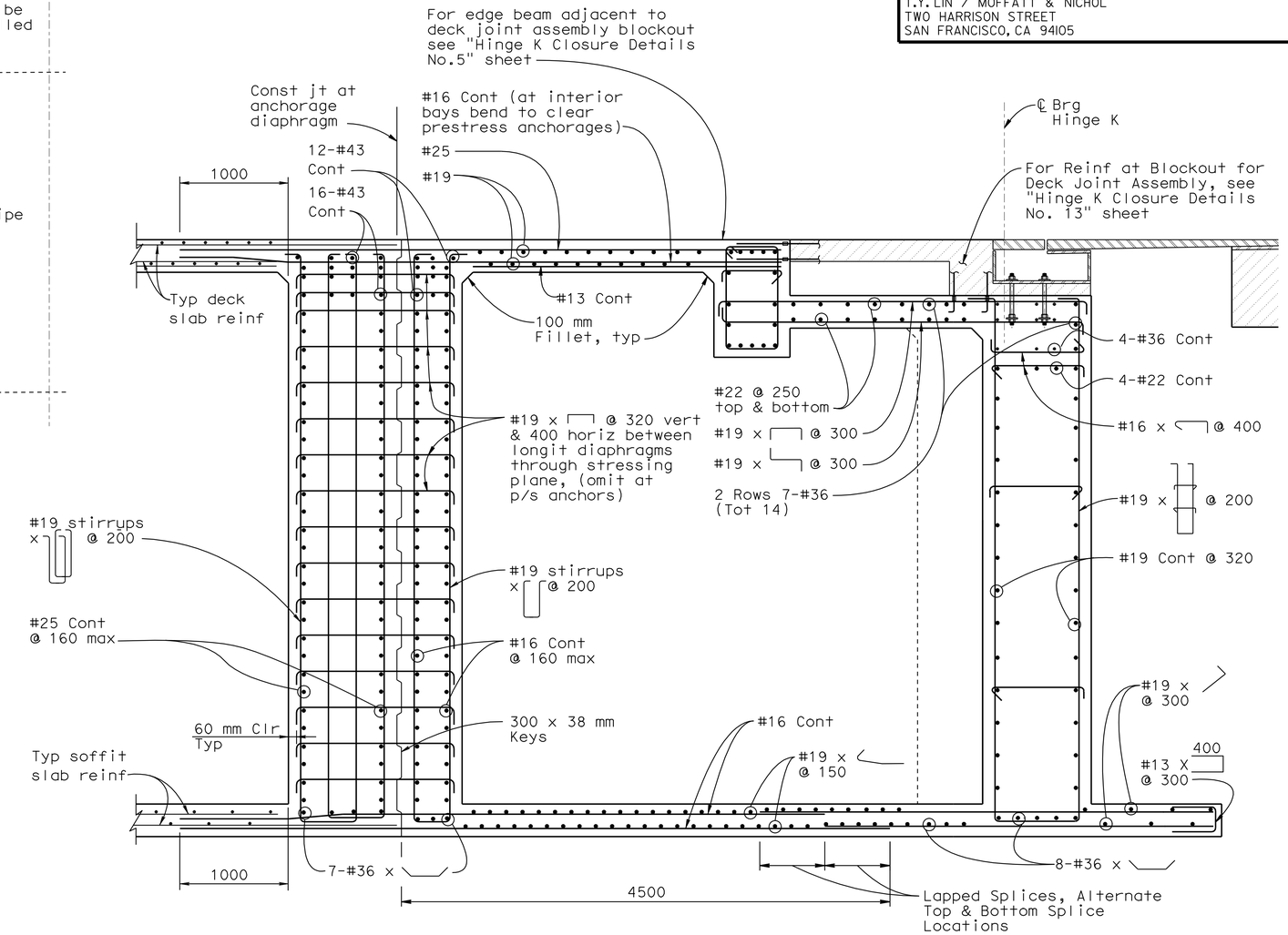

LONGITUDINAL SECTION REINFORCEMENT

(Shown adjacent to outer longit diaphragm)

1:25

7 **REVISED PER ADDENDUM No. 7 DATED OCTOBER 19, 2009**

Note: For locations of Sections B-B & C-C see "Hinge K Closure Details No.1" sheet

ALL DIMENSIONS ARE IN MILLIMETERS UNLESS OTHERWISE SHOWN

DESIGN OVERSIGHT
JOHN MOOK, BERNARD CHAN, JUAN F. CARPIO
March 3, 2008
SIGN OFF DATE

Rev. Date: 5-18-98

DESIGN	BY Lee	CHECKED Wang	
DETAILS	BY van Ryn/Zucchi/Mai	CHECKED Jain	
QUANTITIES	BY Liao	CHECKED E. Nichol	

ORIGINAL SCALE IN MILLIMETERS FOR REDUCED PLANS 0 10 20 30 40 50 60 70 80 90 100

PREPARED FOR THE STATE OF CALIFORNIA DEPARTMENT OF TRANSPORTATION

Jal Birdy
PROJECT ENGINEER

CU 04251
EA 0120S1

BRIDGE NO. 34-0006 L/R
KILOMETER POST 12.8

DISREGARD PRINTS BEARING EARLIER REVISION DATES

SAN FRANCISCO OAKLAND BAY BRIDGE
EAST SPAN SEISMIC SAFETY PROJECT

YBI TRANSITION STRUCTURES

HINGE K CLOSURE DETAILS NO.2

REVISION DATES (PRELIMINARY STAGE ONLY) 9/13/07 01/31/08 3/31/08 8/28/09 9/29/09 2/14/05 7/3/06 10/2/06 1/24/07 6/25/07

SHEET 119 OF 209

FILE => 04-0120s1-34-006r1-n-hingedt09.add

Sept 29, 2009

USERNAME => trmikes1 DATE PLOTTED => 15-OCT-2009 TIME PLOTTED => 11:01

DIST.	COUNTY	ROUTE	KILOMETER POST TOTAL PROJECT	SHEET NO.	TOTAL SHEETS
04	SF	80	12.7/13.2	669	806

Caltrans Metric

REGISTERED ENGINEER - CIVIL

6-23-08
PLANS APPROVAL DATE

REGISTERED PROFESSIONAL ENGINEER A.L. ELY No. 18880 Exp. 6-30-09 CIVIL STATE OF CALIFORNIA

The State of California or its officers or agents shall not be responsible for the accuracy or completeness of electronic copies of this plan sheet.

T.Y. LIN / MOFFATT & NICHOL
TWO HARRISON STREET
SAN FRANCISCO, CA 94105

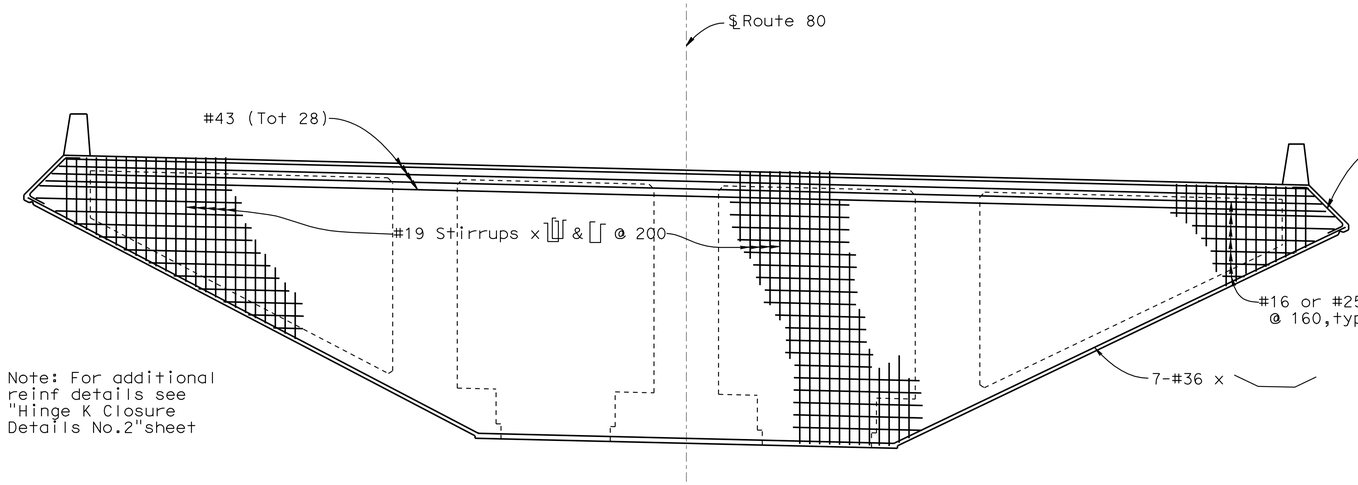

ELEVATION HINGE K CLOSURE ANCHORAGE DIAPHRAGM

(WB Structure shown,EB Structure similar except as noted)

1:60

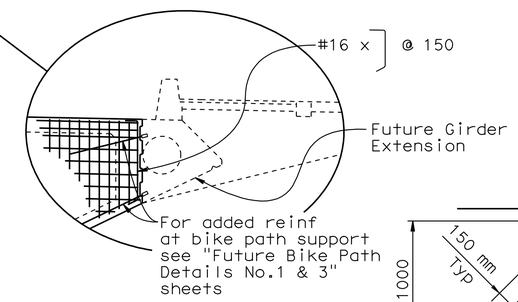

SOUTH EDGE AT EB STRUCTURE

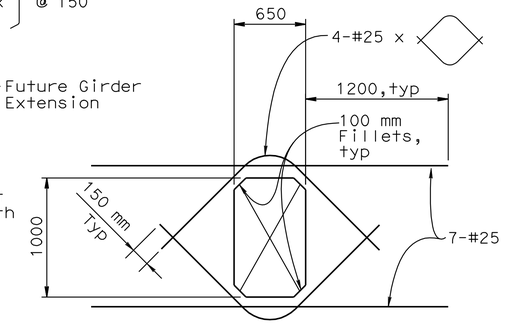

LONGIT DIAPHRAGM ACCESS OPENING

1:25

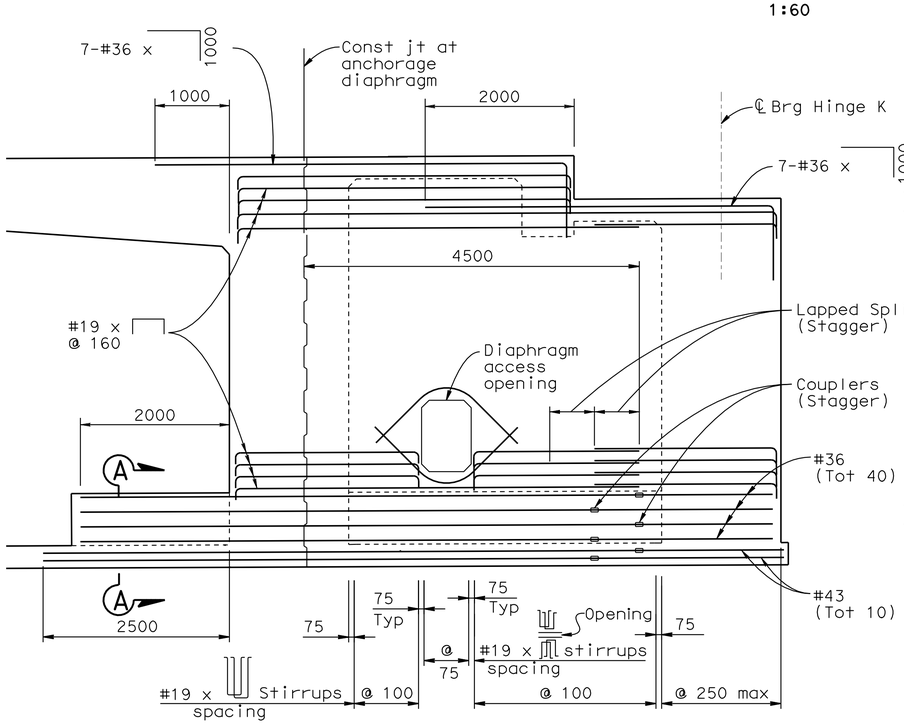

ELEVATION - CENTRAL LONGIT DIAPHRAGM

1:40

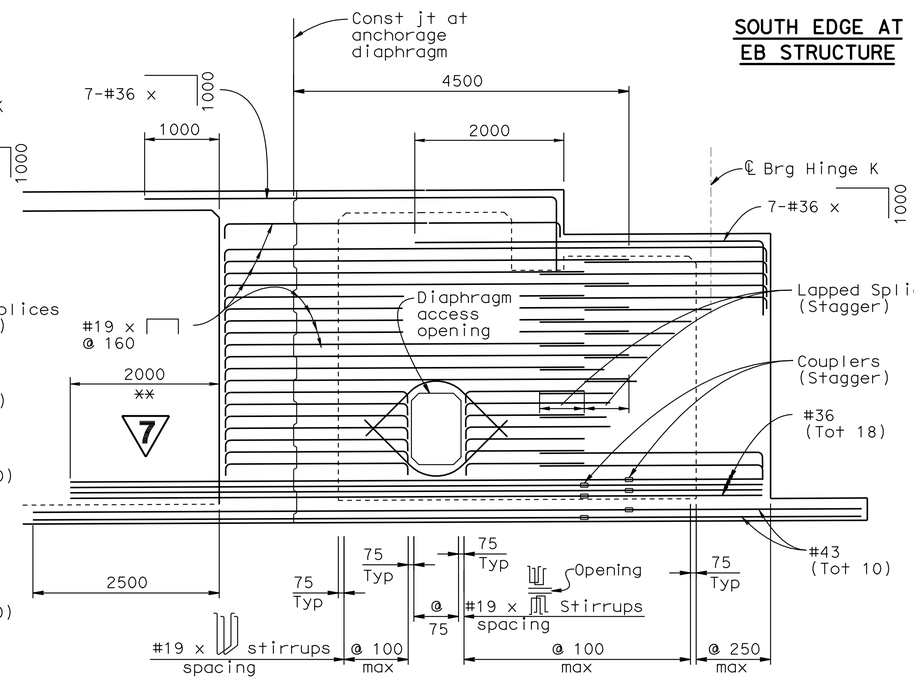

ELEVATION - OUTER LONGIT DIAPHRAGM

1:40

** Bend #18 bars as required to align bars with girder web. 7

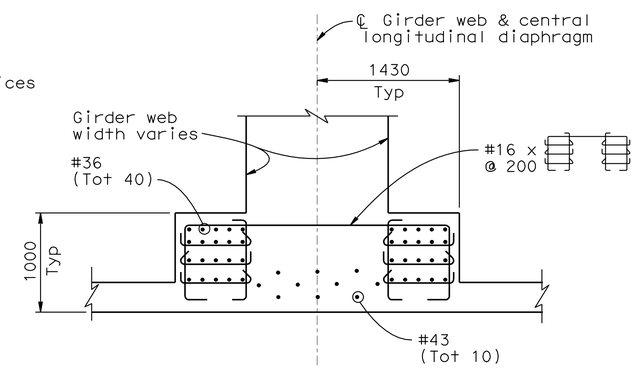

SECTION A-A

(Applicable at central longitudinal diaphragm for WB Structure only)

1:30

7 **REVISED PER ADDENDUM No. 7 DATED OCTOBER 19, 2009**

ALL DIMENSIONS ARE IN MILLIMETERS UNLESS OTHERWISE SHOWN

DESIGN OVERSIGHT
JOHN MOOK, BERNARD CHAN, JUAN F. CARPIO
March 3, 2008
SIGN OFF DATE

Rev. Date: 5-18-98

	BY	CHECKED
DESIGN	Lee	Wang
DETAILS	van Ryn/Zucchi/Mai	Jain
QUANTITIES	Liao	E. Nichol

ORIGINAL SCALE IN MILLIMETERS FOR REDUCED PLANS 0 10 20 30 40 50 60 70 80 90 100

PREPARED FOR THE STATE OF CALIFORNIA DEPARTMENT OF TRANSPORTATION

Jal Birdy
PROJECT ENGINEER

BRIDGE NO. 34-0006 L/R
KILOMETER POST 12.8

CU 04251
EA 0120S1

DISREGARD PRINTS BEARING EARLIER REVISION DATES

REVISION DATES (PRELIMINARY STAGE ONLY) 9/13/07 01/24/08 3/3/08 8/28/09 9/29/09 2/24/03 3/3/06 10/4/06 1/24/07 6/25/07

SHEET 120 OF 209

SAN FRANCISCO OAKLAND BAY BRIDGE
EAST SPAN SEISMIC SAFETY PROJECT

YBI TRANSITION STRUCTURES

HINGE K CLOSURE DETAILS NO.3

FILE => 04-0120s1-34-006rl-n-hingedt10.dwg

Sept 29, 2009

USERNAME => trmikesl DATE PLOTTED => 15-OCT-2009 TIME PLOTTED => 11:01

DIST.	COUNTY	ROUTE	KILOMETER POST TOTAL PROJECT	SHEET NO.	TOTAL SHEETS
04	SF	80	12.7/13.2	670	806

REGISTERED ENGINEER - CIVIL

6-23-08
PLANS APPROVAL DATE

REGISTERED PROFESSIONAL ENGINEER A.L. ELY No. 18880 Exp. 6-30-09 CIVIL STATE OF CALIFORNIA

The State of California or its officers or agents shall not be responsible for the accuracy or completeness of electronic copies of this plan sheet.

T.Y. LIN / MOFFATT & NICHOL
TWO HARRISON STREET
SAN FRANCISCO, CA 94105

Caltrans Metric

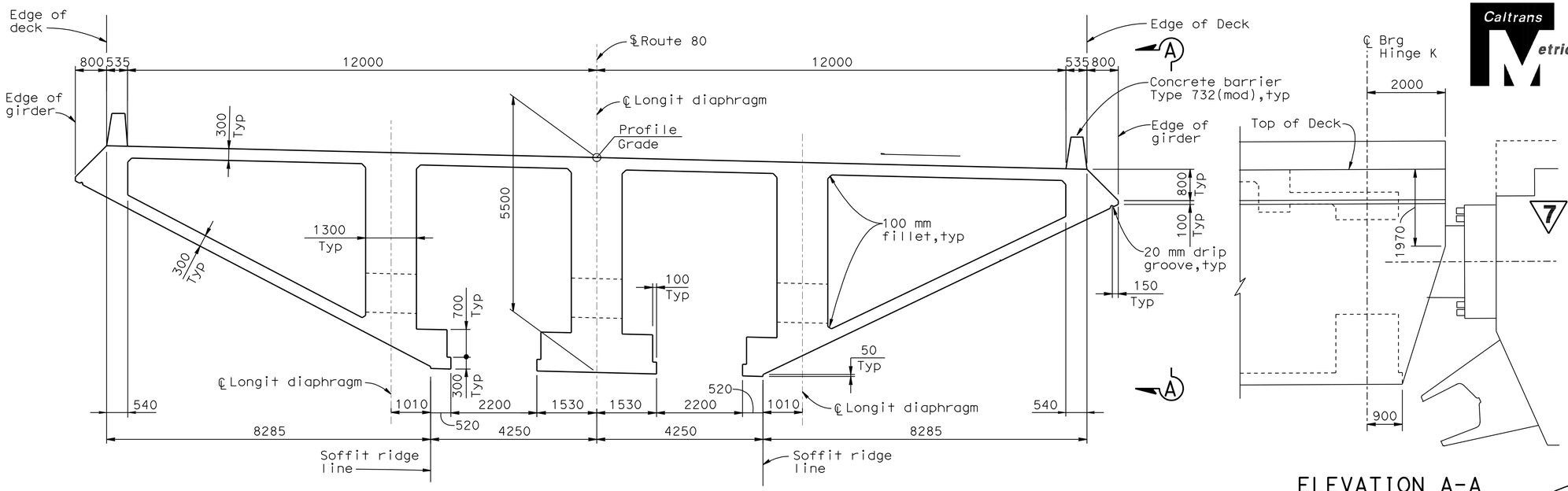

TYPICAL SECTION AT HINGE K CLOSURE

(WB Structure shown,EB Structure similar except as noted)

1:60

ELEVATION A-A

1:60

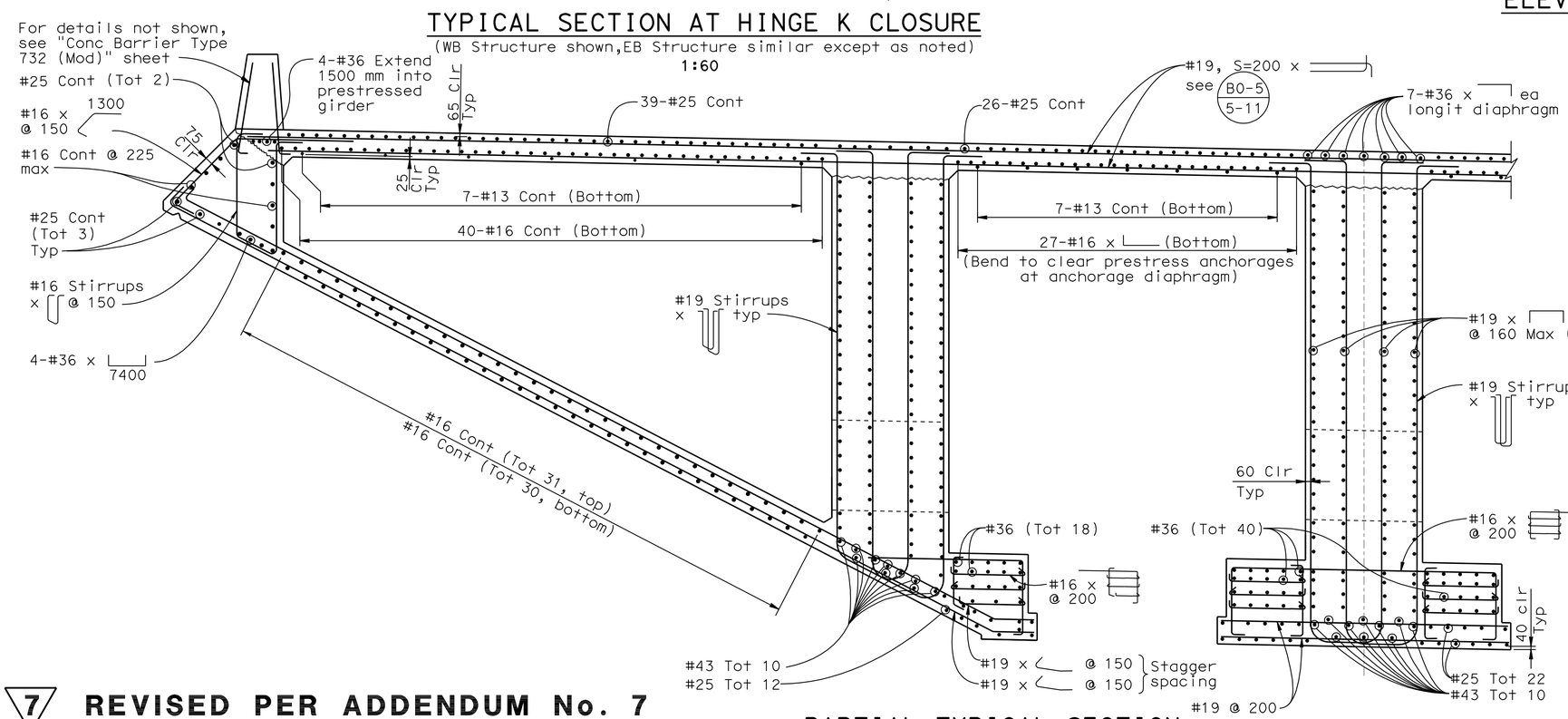

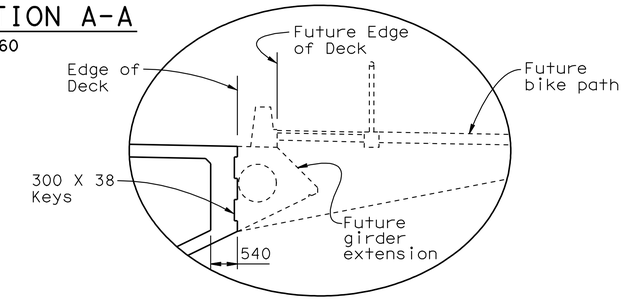

SOUTH EDGE AT EB STRUCTURE

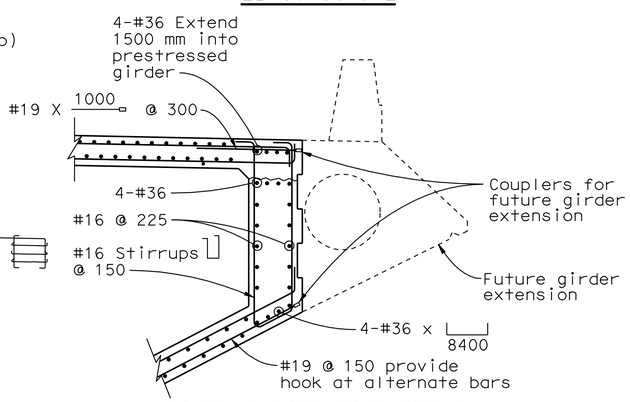

SOUTH GIRDER EDGE DETAIL AT EB STRUCTURE

PARTIAL TYPICAL SECTION

1:30

7 **REVISED PER ADDENDUM No. 7 DATED OCTOBER 19, 2009**

ALL DIMENSIONS ARE IN MILLIMETERS UNLESS OTHERWISE SHOWN

DESIGN OVERSIGHT
JOHN MOOK, BERNARD CHAN, JUAN F. CARPIO
March 3, 2008
SIGN OFF DATE

	BY	CHECKED
DESIGN	Lee	Wang
DETAILS	van Ryn/Zucchi/Mai	Jain
QUANTITIES	Liao	E. Nichol

PREPARED FOR THE STATE OF CALIFORNIA DEPARTMENT OF TRANSPORTATION

Jal Birdy
PROJECT ENGINEER

BRIDGE NO. 34-0006 L/R
KILOMETER POST 12.8

SAN FRANCISCO OAKLAND BAY BRIDGE
EAST SPAN SEISMIC SAFETY PROJECT

YBI TRANSITION STRUCTURES

HINGE K CLOSURE DETAILS NO.4

Rev. Date: 5-18-98

ORIGINAL SCALE IN MILLIMETERS FOR REDUCED PLANS 0 10 20 30 40 50 60 70 80 90 100

CU 04251
EA 0120S1

DISREGARD PRINTS BEARING EARLIER REVISION DATES

REVISION DATES (PRELIMINARY STAGE ONLY) 9/13/01 01/24/08 3/3/08 8/28/09 9/29/09 2/14/03 7/3/06 10/4/06 1/24/07 6/25/07

SHEET 121 OF 209

FILE => 04-0120s1-34-006r1-n-hinged11.add

Sept 29, 2009

USERNAME => trmikesl DATE PLOTTED => 15-OCT-2009 TIME PLOTTED => 11:02

DIST.	COUNTY	ROUTE	KILOMETER POST TOTAL PROJECT	SHEET NO.	TOTAL SHEETS
04	SF	80	12.7/13.2	671	806

Caltrans Metric

REGISTERED ENGINEER - CIVIL

6-23-08
PLANS APPROVAL DATE

REGISTERED PROFESSIONAL ENGINEER A.L. ELY No. 18880 Exp. 6-30-09 CIVIL STATE OF CALIFORNIA

7

The State of California or its officers or agents shall not be responsible for the accuracy or completeness of electronic copies of this plan sheet.

T.Y. LIN / MOFFATT & NICHOL
TWO HARRISON STREET
SAN FRANCISCO, CA 94105

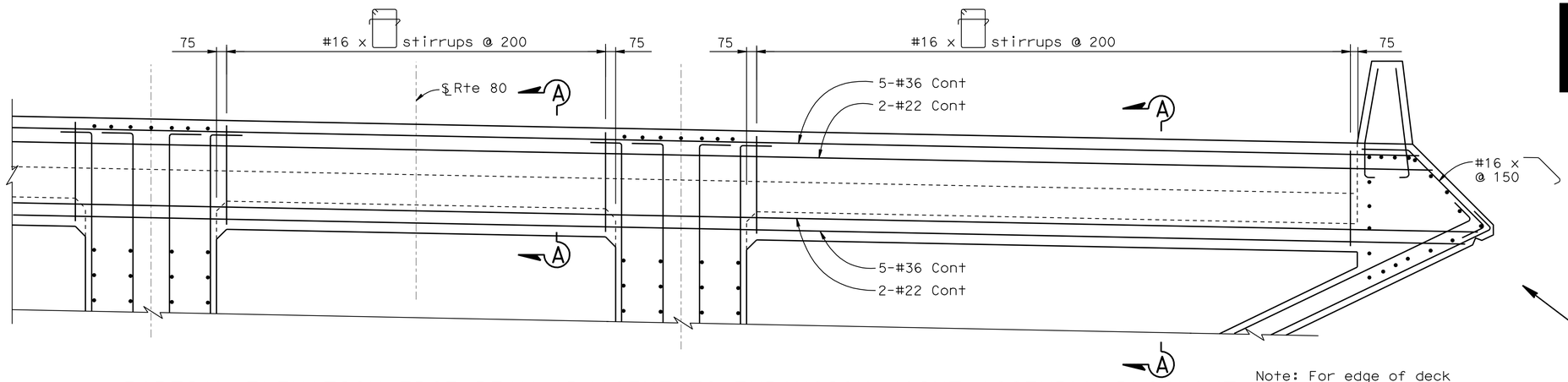

PARTIAL ELEVATION EDGE BEAM ADJACENT TO EXPANSION JOINT ASSEMBLY BLOCKOUT

1:25

Note: For edge of deck details at barrier blockout for deck joint assembly see "Hinge K Closure Details No.7"

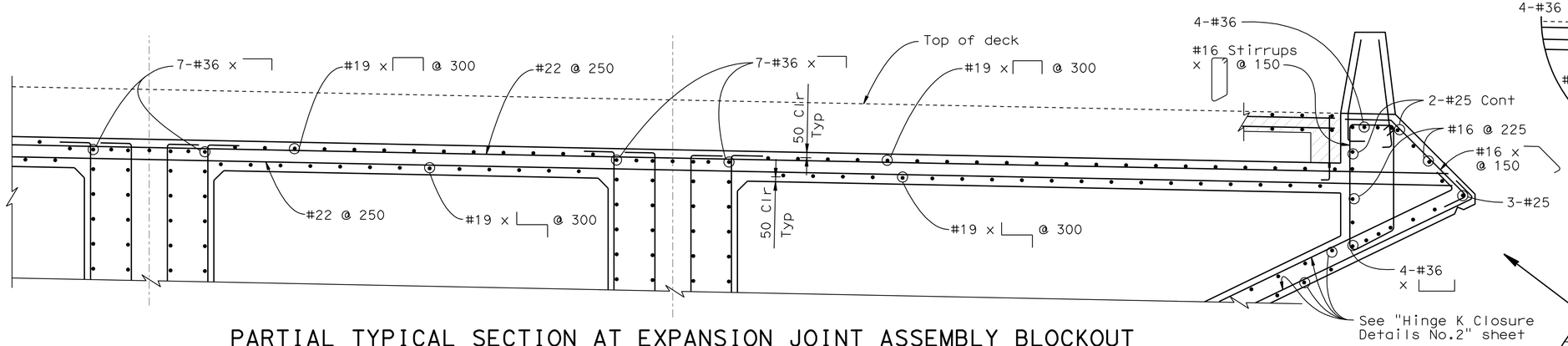

PARTIAL TYPICAL SECTION AT EXPANSION JOINT ASSEMBLY BLOCKOUT

1:25

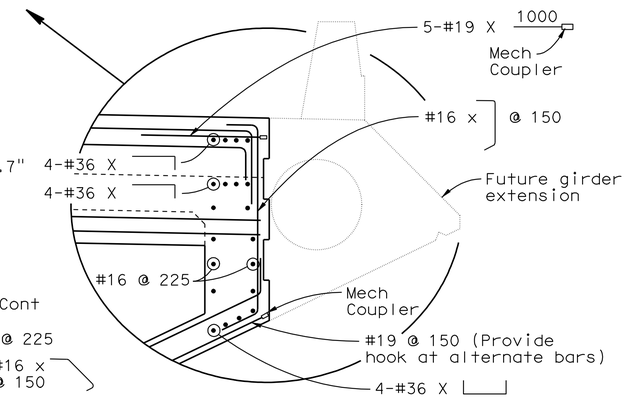

SOUTH EDGE AT EB STRUCTURE

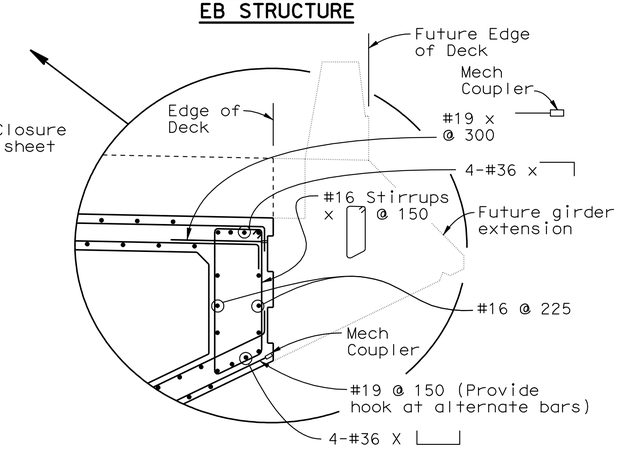

SOUTH EDGE AT EB STRUCTURE

Note: For reinf at blockout for deck joint assembly, see "Hinge K Closure Details No. 13" sheet.

Indicates concrete placed when deck joint installed

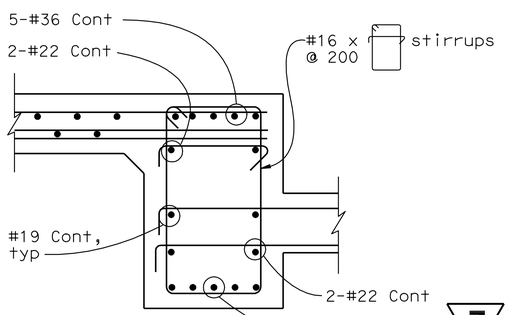

SECTION A-A

1:15

7 **REVISED PER ADDENDUM No. 7 DATED OCTOBER 19, 2009**

ALL DIMENSIONS ARE IN MILLIMETERS UNLESS OTHERWISE SHOWN

DESIGN OVERSIGHT
JOHN MOOK, BERNARD CHAN, JUAN F. CARPIO
March 3, 2008
SIGN OFF DATE

Rev. Date: 5-18-98

	BY	CHECKED
DESIGN	Lee	Wang
DETAILS	van Ryn/Zucchi/Mai	Jain
QUANTITIES	Liao	E. Nichol

PREPARED FOR THE STATE OF CALIFORNIA DEPARTMENT OF TRANSPORTATION

Jal Birdy
PROJECT ENGINEER

CU 04251
EA 0120S1

BRIDGE NO. 34-0006 L/R
KILOMETER POST 12.8

SAN FRANCISCO OAKLAND BAY BRIDGE
EAST SPAN SEISMIC SAFETY PROJECT

YBI TRANSITION STRUCTURES

HINGE K CLOSURE DETAILS NO.5

ORIGINAL SCALE IN MILLIMETERS FOR REDUCED PLANS 0 10 20 30 40 50 60 70 80 90 100

DISREGARD PRINTS BEARING EARLIER REVISION DATES

REVISION DATES (PRELIMINARY STAGE ONLY) 9/13/07 01/31/08 3/3/08 8/28/09 9/29/09 2/14/05 7/3/06 10/2/06 1/24/07 6/25/07

SHEET 122 OF 209

FILE => 04-0120s1-34-006rl-n-hingedt12.add

Sept 29, 2009

USERNAME => trmikes1 DATE PLOTTED => 15-OCT-2009 TIME PLOTTED => 11:02

DIST.	COUNTY	ROUTE	KILOMETER POST TOTAL PROJECT	SHEET NO.	TOTAL SHEETS
04	SF	80	12.7/13.2	672	806

Caltrans Metric

REGISTERED ENGINEER - CIVIL

6-23-08
PLANS APPROVAL DATE

REGISTERED PROFESSIONAL ENGINEER A.L. ELY No. 18880 Exp. 6-30-09 CIVIL STATE OF CALIFORNIA

7

The State of California or its officers or agents shall not be responsible for the accuracy or completeness of electronic copies of this plan sheet.

T.Y. LIN / MOFFATT & NICHOL
TWO HARRISON STREET
SAN FRANCISCO, CA 94105

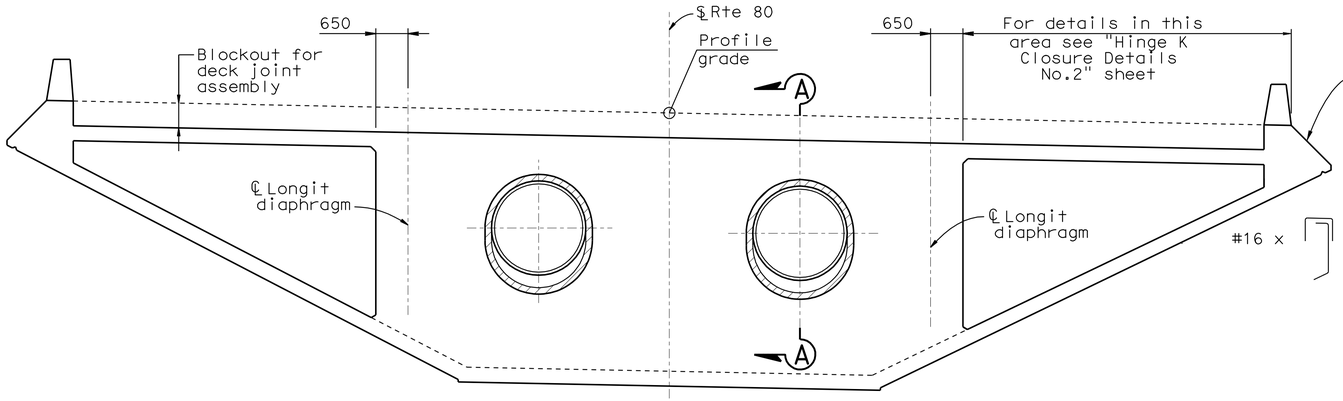

ELEVATION HINGE K BEARING DIAPHRAGM

(WB Structure shown, EB Structure similar except as noted)
1:60

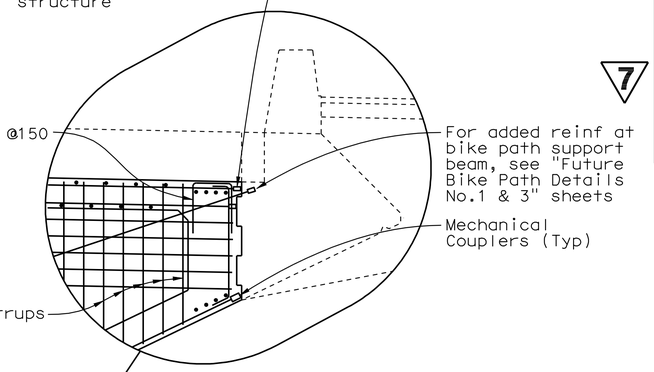

SOUTH EDGE AT EB STRUCTURE

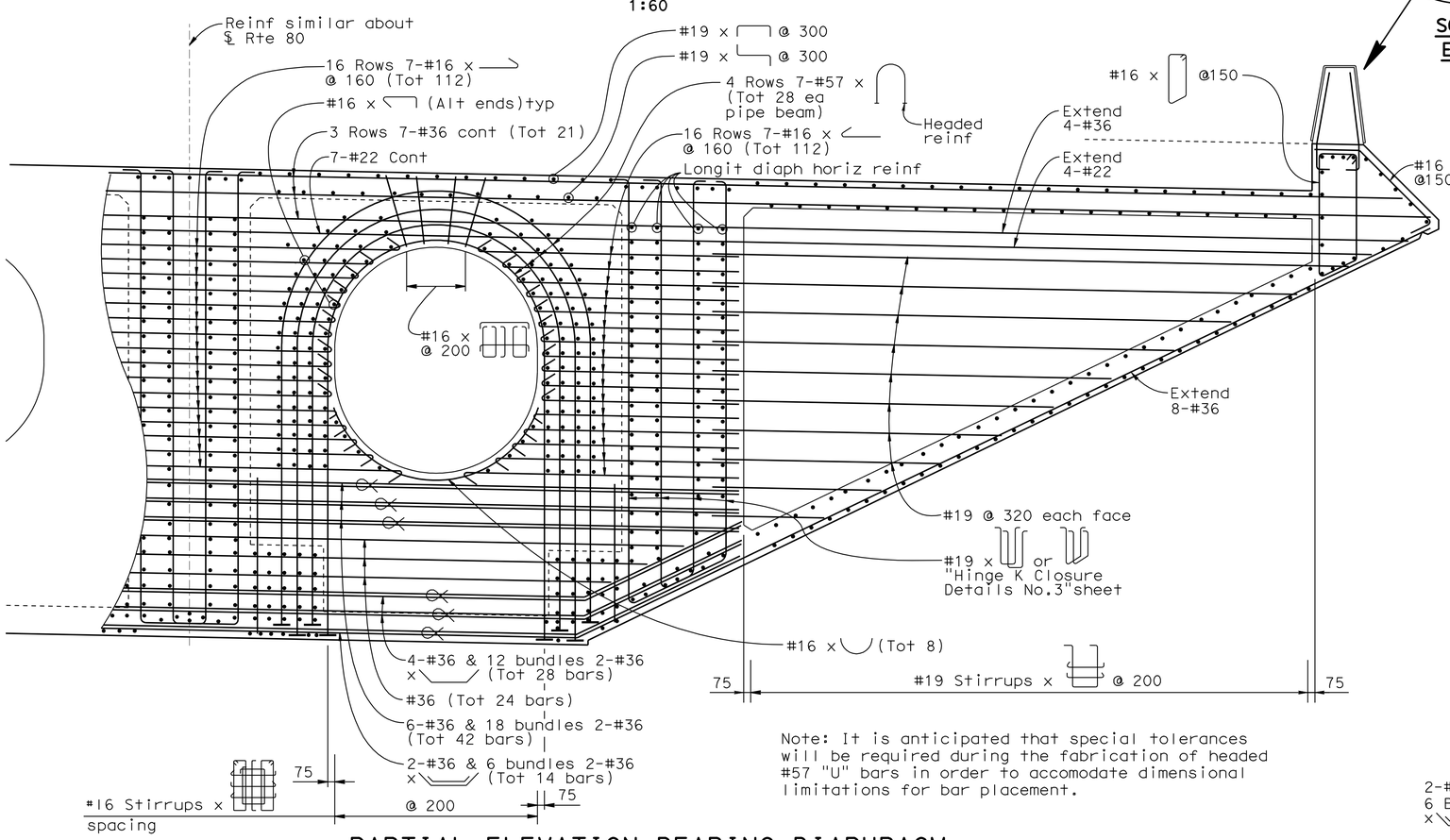

Note: It is anticipated that special tolerances will be required during the fabrication of headed #57 "U" bars in order to accomodate dimensional limitations for bar placement.

PARTIAL ELEVATION BEARING DIAPHRAGM

1:30

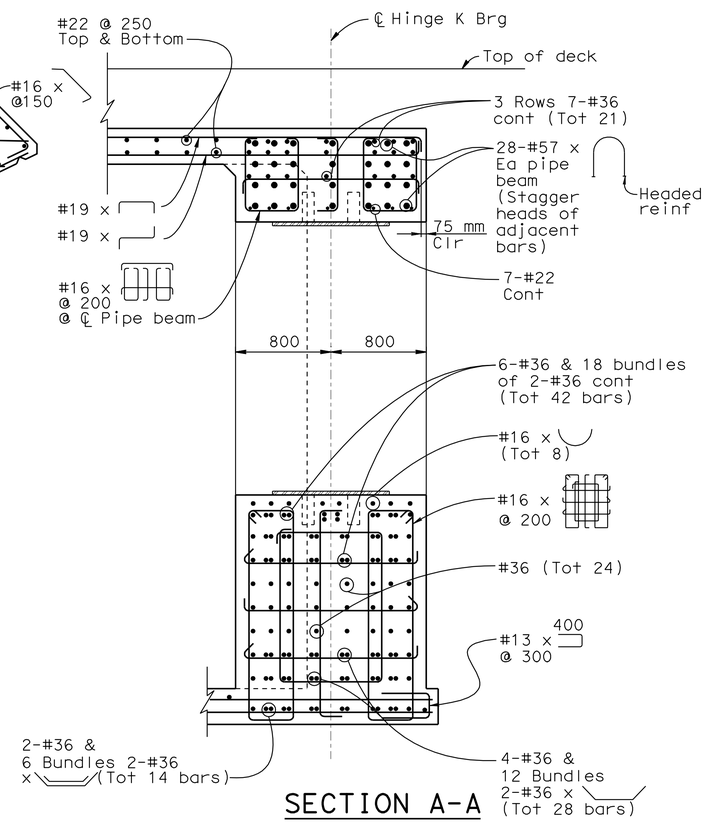

SECTION A-A

1:25

7 **REVISED PER ADDENDUM No. 7 DATED OCTOBER 19, 2009**

ALL DIMENSIONS ARE IN MILLIMETERS UNLESS OTHERWISE SHOWN

DESIGN OVERSIGHT
JOHN MOOK, BERNARD CHAN, JUAN F. CARPIO
March 3, 2008
SIGN OFF DATE

Rev. Date: 5-18-98

DESIGN	BY Lee	CHECKED Wang	
DETAILS	BY van Ryn/Zucchi/Mai	CHECKED Jain	
QUANTITIES	BY Liao	CHECKED E. Nichol	

ORIGINAL SCALE IN MILLIMETERS FOR REDUCED PLANS 0 10 20 30 40 50 60 70 80 90 100

PREPARED FOR THE STATE OF CALIFORNIA DEPARTMENT OF TRANSPORTATION

Jal Birdy
PROJECT ENGINEER

CU 04251
EA 0120S1

BRIDGE NO. 34-0006 L/R
KILOMETER POST 12.8

SAN FRANCISCO OAKLAND BAY BRIDGE
EAST SPAN SEISMIC SAFETY PROJECT

YBI TRANSITION STRUCTURES

HINGE K CLOSURE DETAILS NO.6

DISREGARD PRINTS BEARING EARLIER REVISION DATES

REVISION DATES (PRELIMINARY STAGE ONLY) 9/13/07 01/31/08 3/31/08 8/28/09 9/29/09 2/14/03 3/14/06 10/12/06 1/24/07 6/25/07

SHEET 123 OF 209

FILE => 04-0120s1-34-006rl-n-hingedt13.add

Sept 29, 2009

USERNAME => trmikes1 DATE PLOTTED => 15-OCT-2009 TIME PLOTTED => 11:02

DIST.	COUNTY	ROUTE	KILOMETER POST TOTAL PROJECT	SHEET NO.	TOTAL SHEETS
04	SF	80	12.7/13.2	673	806

Caltrans Metric

REGISTERED ENGINEER - CIVIL

6-23-08
PLANS APPROVAL DATE

REGISTERED PROFESSIONAL ENGINEER A.L. ELY No. 18880 Exp. 6-30-09 CIVIL STATE OF CALIFORNIA

The State of California or its officers or agents shall not be responsible for the accuracy or completeness of electronic copies of this plan sheet.

T.Y. LIN / MOFFATT & NICHOL
TWO HARRISON STREET
SAN FRANCISCO, CA 94105

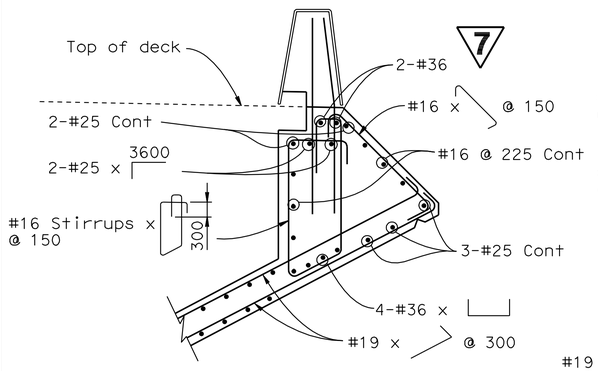

TYPICAL DETAIL

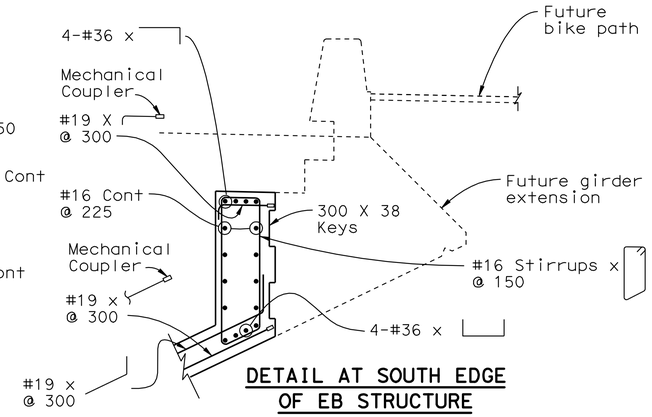

DETAIL AT SOUTH EDGE OF EB STRUCTURE

EDGE OF DECK DETAIL EAST OF HINGE K BEARING DIAPHRAGM

1:25

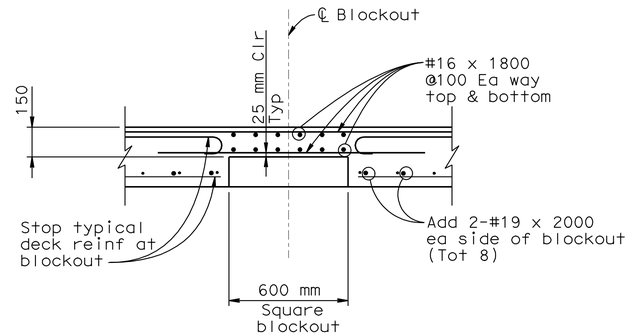

PARTIAL DEPTH DECK BLOCKOUT DETAIL

(For location see "Hinge K Closure Details No.1" sheet)

1:15

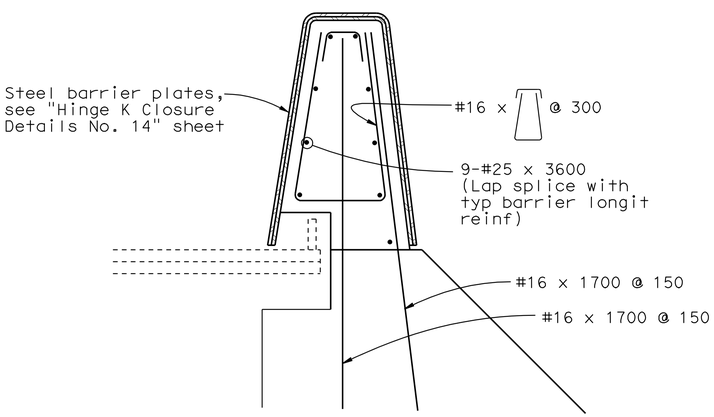

BARRIER DETAIL AT BLOCKOUT FOR EXPANSION JOINT ASSEMBLY

1:10

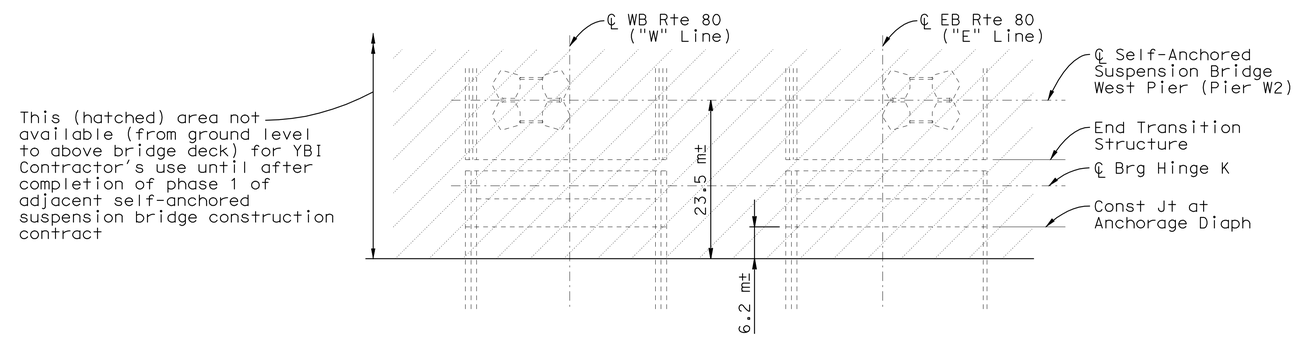

PLAN

HINGE K CLOSURE - CONSTRUCTION ACCESS RESTRICTIONS

1:400

7 **REVISED PER ADDENDUM No. 7 DATED OCTOBER 19, 2009**

ALL DIMENSIONS ARE IN MILLIMETERS UNLESS OTHERWISE SHOWN

DESIGN OVERSIGHT
JOHN MOOK, BERNARD CHAN, JUAN F. CARPIO
March 3, 2008
SIGN OFF DATE

Rev. Date: 5-18-98

	BY	CHECKED
DESIGN	Lee	Wang
DETAILS	van Ryn/Zucchi/Mai	Jain
QUANTITIES	Liao	E. Nichol

ORIGINAL SCALE IN MILLIMETERS FOR REDUCED PLANS 0 10 20 30 40 50 60 70 80 90 100

PREPARED FOR THE STATE OF CALIFORNIA DEPARTMENT OF TRANSPORTATION

Jal Birdy
PROJECT ENGINEER

CU 04251
EA 0120S1

BRIDGE NO. 34-0006 L/R
KILOMETER POST 12.8

SAN FRANCISCO OAKLAND BAY BRIDGE
EAST SPAN SEISMIC SAFETY PROJECT

YBI TRANSITION STRUCTURES

HINGE K CLOSURE DETAILS NO.7

DISREGARD PRINTS BEARING EARLIER REVISION DATES

REVISION DATES (PRELIMINARY STAGE ONLY) 9/13/07 01/31/08 3/31/08 8/28/09 9/29/09 2/14/03 1/3/06 10/2/06 1/24/07 6/28/07

SHEET 124 OF 209

FILE => 04-0120s1-34-006rl-n-hingedt14.add

Sept 29, 2009

USERNAME => trmikest DATE PLOTTED => 15-OCT-2009 TIME PLOTTED => 11:02

DIST.	COUNTY	ROUTE	KILOMETER POST TOTAL PROJECT	SHEET NO.	TOTAL SHEETS
04	SF	80	12.7/13.2	683	806

REGISTERED ENGINEER - CIVIL
6-23-08
PLANS APPROVAL DATE
REGISTERED PROFESSIONAL ENGINEER A.L. ELY No. 18880 Exp. 6-30-09 CIVIL STATE OF CALIFORNIA

The State of California or its officers or agents shall not be responsible for the accuracy or completeness of electronic copies of this plan sheet.

T.Y. LIN / MOFFATT & NICHOL
TWO HARRISON STREET
SAN FRANCISCO, CA 94105

Caltrans Metric

7 REVISED PER ADDENDUM No. 7 DATED OCTOBER 19, 2009

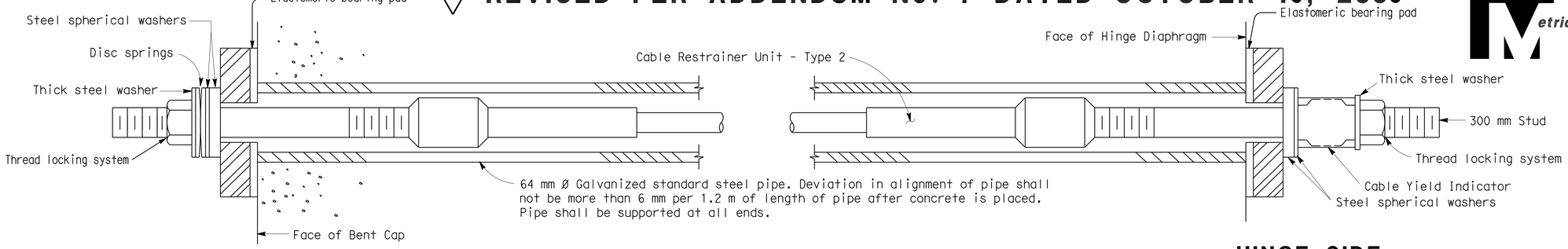

BENT SIDE
(Retrofit construction shown)

CABLE UNIT

HINGE SIDE
(Retrofit construction shown)

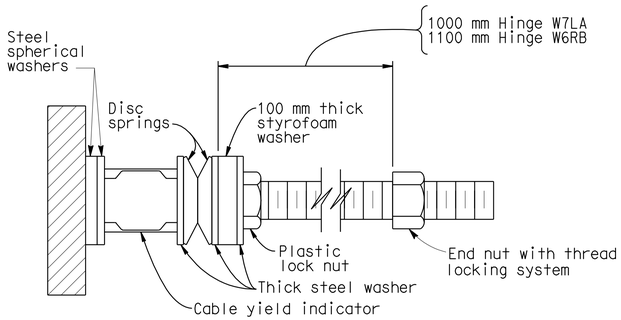

ADJUSTMENT END 1
(New construction shown)

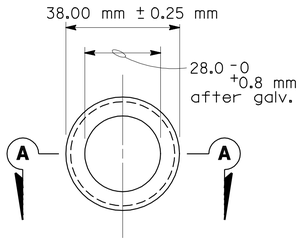

END VIEW

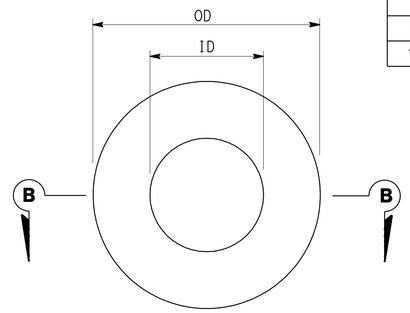

PLAN

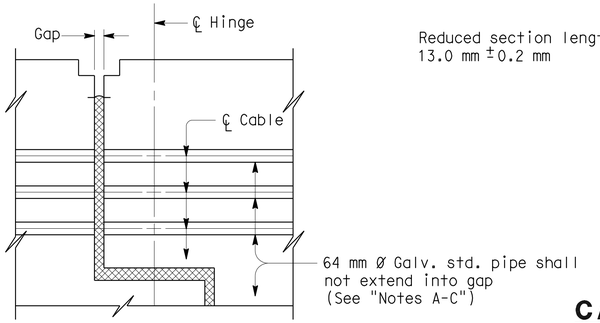

HINGE DETAIL

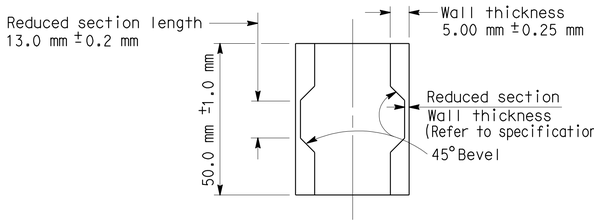

SECTION A-A

CABLE YIELD INDICATOR

All dimensions are before galvanizing except as noted.

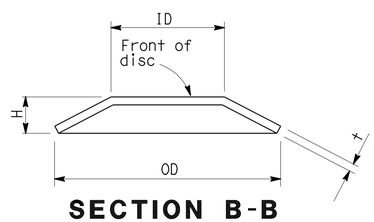

SECTION B-B
(Single spring)

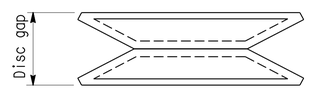

AS INSTALLED ON STUD

DISC SPRINGS AND WASHERS

"All dimensions in mm, except as noted"

	DISC SPRING					STEEL SPHERICAL WASHER			THICK WASHER		
L*(m)	ID	OD	t	H	COLOR CODE	ID	OD	Nom thick.	ID	OD	t**
0 - 7.6	25	50	1.6	3.3	WHITE	30	57	13	26	50	6.3
7.7 - 9.7	25	50	2.0	3.4	RED	30	57	13	26	50	6.3
9.8 - 11.5	25	50	2.4	3.6	BLUE	30	57	13	26	50	6.3
11.6 - 13.9	31	63	2.5	4.5	YELLOW	33	64	13	29	57	6.3

*For length L (m), see "Cable Restrainer Unit - Type 2" sheet **Minimum value

NOTE: All OD and ID dimensions for washers and disc springs shall meet the dimensional tolerances for harden steel washers, ASTM F436

7 RESTRAINER UNIT INSTALLATION PROCEDURE

2 NEW CONSTRUCTION:

1. Install spherical washers, Cable Yield Indicator, disk springs, thick steel washers, and end nut on the "adjustment end" of restrainers as shown in "Adjustment End" detail. Disc springs shall be installed front to front as shown in "Disc Spring" detail.
2. Place only nut and washer on end of restrainers that is opposite "adjustment end". Place thread locking system on stud at this end prior to installing nut and washers, and prior to setting the cable.
3. Tighten nut on the cable from the adjustment end of restrainer until the disc springs collapse and there is no disc gap remaining between the discs. The cable should be approximately straight with no sag. Remove end nut and install styrofoam washer and plastic nut, then re-install end nut. Place thread locking system on stud before re-installing end nut.
4. Final position of end nut is as shown on "Adjustment End" detail.

RETROFIT CONSTRUCTION:

1. Install disc springs on bent side of cable system using spherical washers to align discs to stud. Discs shall be installed front to front as shown in "Disc Spring" detail. Install Cable Yield Indicator, spherical washers, nut and washer on the hinge side of restrainers as shown in "Cable Unit" detail.
2. If existing retrofit cables are being reused, 300 mm studs shall be installed.
3. Place thread locking system on bent side stud prior to installing nut and washers, and prior to setting the cable.
4. Tighten the cable from hinge side of restrainer until the disc springs at the opposite end collapse, and there is no disc gap remaining between the discs. The cable should be approximately straight with no sag.
5. Place thread locking system on hinge side stud after tightening the cable, but before backing off the nut. Back off the nut at hinge side a distance equal to maximum additional amount that the hinge joint is expected to open, relative to existing ambient conditions, as shown on the plans for movement rating.

NOTE: If the cable needs to be secured from turning while tightening, use double nut locking technique on the stud to protect the threads.

NOTES:

A. The ends of pipe shall be covered or capped to prevent concrete and debris from entering the pipe until hinge concrete is placed.

B. Care should be taken to align the pipes on each side of the hinge.

C. All ends of pipes must be flush with or slightly recessed from the concrete. The inside edges of the pipes must be smooth to prevent fraying of cables.

Note: For dimensions not shown, see table

ALL DIMENSIONS ARE IN MILLIMETERS UNLESS OTHERWISE SHOWN

NO SCALE

SPECIAL DETAILS

STANDARD DRAWING

FILE NO. XS 12-53.1	DESIGN BY S. SAHS	CHECKED R.J. ZELINSKI	APPROVAL RECOMMENDED BY
DRAWING DATE REVISED	DETAILS BY R. YEE	CHECKED R.J. ZELINSKI	DESIGN SUPERVISOR
	SUBMITTED BY R.J. ZELINSKI		

1 REVISED ADJUSTMENT END DETAIL
2 REVISED INSTALLATION PROCEDURE NOTES

STATE OF CALIFORNIA DEPARTMENT OF TRANSPORTATION

DIVISION OF STRUCTURES
STRUCTURE DESIGN

BRIDGE NO. 34-0006 L/R
KILOMETER POST 12.8

YBI TRANSITION STRUCTURES
CABLE RESTRAINER UNIT - TYPE 2 DETAILS

DS OSD 2147A (METRIC) (REV. 2/25/97)

ORIGINAL SCALE IN MILLIMETERS FOR REDUCED PLANS 0 10 20 30 40 50 60 70 80 90 100

CU 04251
EA 0120S1

DISREGARD PRINTS BEARING EARLIER REVISION DATES

REVISION DATES (PRELIMINARY STAGE ONLY) 9/13/07 1/31/08 3/3/08 8/28/09 9/29/09 2/14/03 7/3/06 10/2/06 1/24/07 6/25/07

SHEET 134 OF 209

04-0120s1-34-006rl-o-resunit02.add

XS12531.DGN

Sept 29, 2009

USERNAME => trmikesl DATE PLOTTED => 15-OCT-2009 TIME PLOTTED => 11:03

DIST.	COUNTY	ROUTE	KILOMETER POST TOTAL PROJECT	SHEET NO.	TOTAL SHEETS
04	SF	80	12.7/13.2	706	806

REGISTERED ENGINEER - CIVIL

6-23-08
PLANS APPROVAL DATE

REGISTERED PROFESSIONAL ENGINEER A.L. ELY No. 18880 Exp. 6-30-09 CIVIL STATE OF CALIFORNIA

The State of California or its officers or agents shall not be responsible for the accuracy or completeness of electronic copies of this plan sheet.

T.Y. LIN / MOFFATT & NICHOL
TWO HARRISON STREET
SAN FRANCISCO, CA 94105

Caltrans Metric

Note:
Bike path slab and edge beams not to be placed until stressing of EB Transition Structure is completed

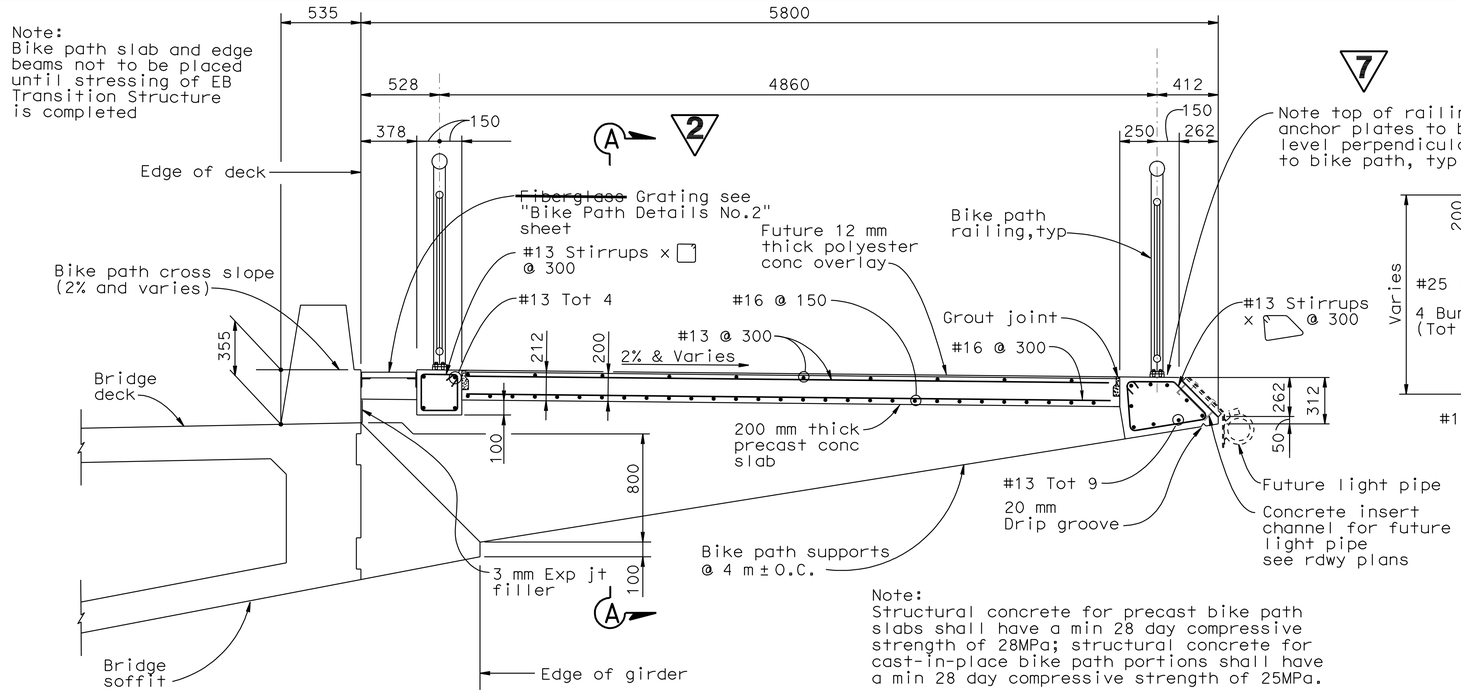

Note:
Structural concrete for precast bike path slabs shall have a min 28 day compressive strength of 28MPa; structural concrete for cast-in-place bike path portions shall have a min 28 day compressive strength of 25MPa.

TYPICAL SECTION
1:20

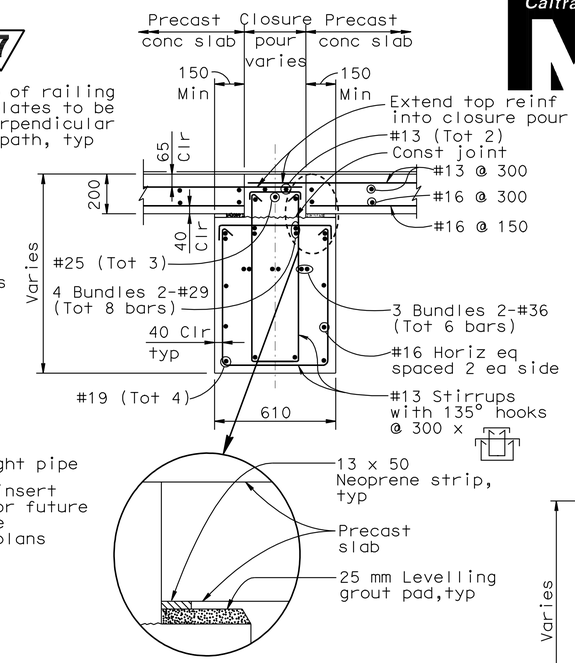

SECTION A-A
1:15

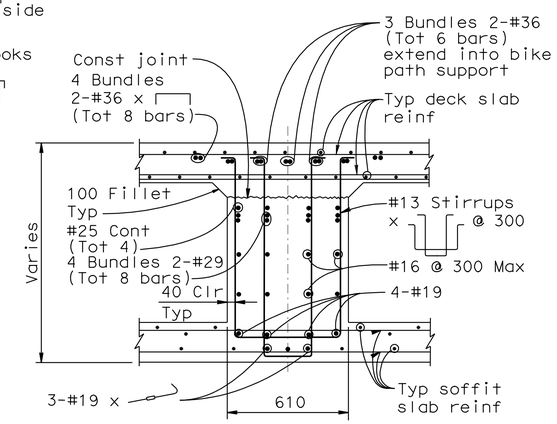

SECTION B-B
1:15

2 REVISED PER ADDENDUM No. 2 DATED JANUARY 22, 2009

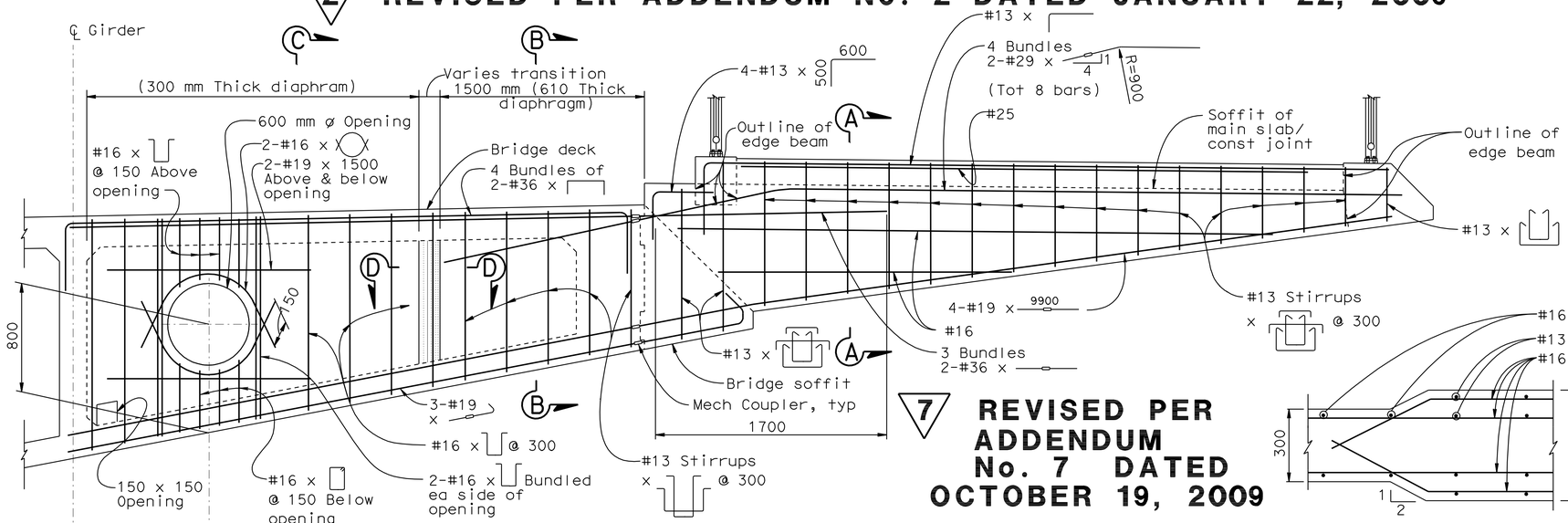

7 REVISED PER ADDENDUM No. 7 DATED OCTOBER 19, 2009

TYPICAL SECTION AT BIKE PATH SUPPORT
(Shown at partial width diaphragms, similar at intermediate diaphragms see "Girder Diaphragm Details No.2" sheet)
1:20

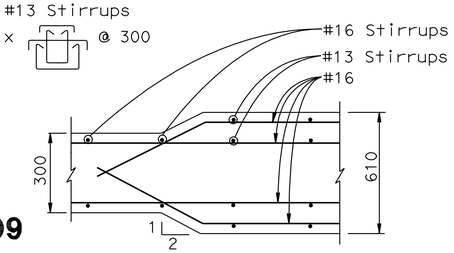

SECTION D-D
1:15

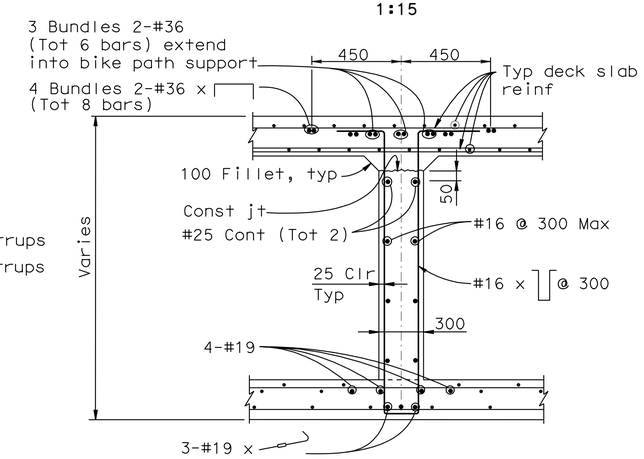

SECTION C-C
1:15

ALL DIMENSIONS ARE IN MILLIMETERS UNLESS OTHERWISE SHOWN

DESIGN OVERSIGHT
JOHN MOOK, BERNARD CHAN, JUAN F. CARPIO
March 3, 2008
SIGN OFF DATE

	BY	CHECKED
DESIGN	Atiqullah	Ahn
DETAILS	van Ryn/Zucchi/Mai	Jain
QUANTITIES	Liao	E. Nichol

PREPARED FOR THE STATE OF CALIFORNIA DEPARTMENT OF TRANSPORTATION

Jal Birdy
PROJECT ENGINEER

BRIDGE NO. 34-0006 L/R
KILOMETER POST 12.8

SAN FRANCISCO OAKLAND BAY BRIDGE
EAST SPAN SEISMIC SAFETY PROJECT

YBI TRANSITION STRUCTURES
BIKE PATH DETAILS NO.1

Rev. Date: 5-18-98

ORIGINAL SCALE IN MILLIMETERS FOR REDUCED PLANS 0 10 20 30 40 50 60 70 80 90 100

CU 04251
EA 0120S1

DISREGARD PRINTS BEARING EARLIER REVISION DATES

REVISION DATES (PRELIMINARY STAGE ONLY): 9/13/01 01/31/08 3/31/08 8/28/09 9/29/09 2/14/05 1/3/06 10/27/06 1/24/07 6/25/07

SHEET 157 OF 209

FILE => 04-0120s1-34-006rl-u-bikpdt01.dds

Sept 29, 2009

USERNAME => trmikest DATE PLOTTED => 15-OCT-2009 TIME PLOTTED => 11:03

DIST.	COUNTY	ROUTE	KILOMETER POST TOTAL PROJECT	SHEET NO.	TOTAL SHEETS
04	SF	80	12.7/13.2	712	806

REGISTERED ENGINEER - CIVIL

6-23-08
PLANS APPROVAL DATE

REGISTERED PROFESSIONAL ENGINEER A.L. ELY No. 18880 Exp. 6-30-11 CIVIL STATE OF CALIFORNIA

The State of California or its officers or agents shall not be responsible for the accuracy or completeness of electronic copies of this plan sheet.

T.Y. LIN / MOFFATT & NICHOL
TWO HARRISON STREET
SAN FRANCISCO, CA 94105

Caltrans Metric

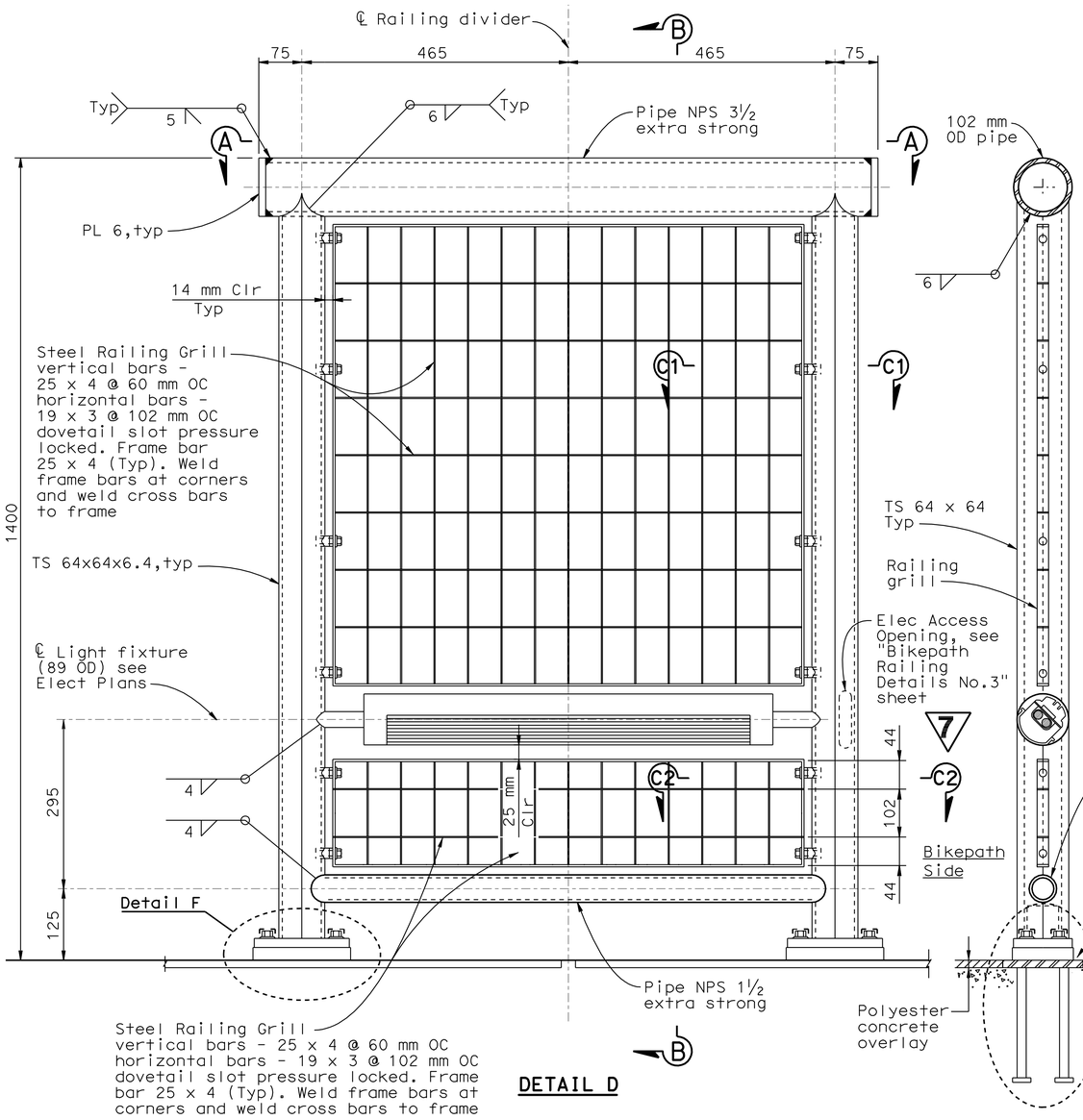

DETAIL D

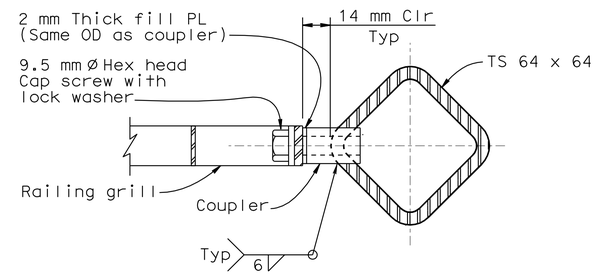

SECTION C1-C1
(Typ above light fixture)
1:1.5

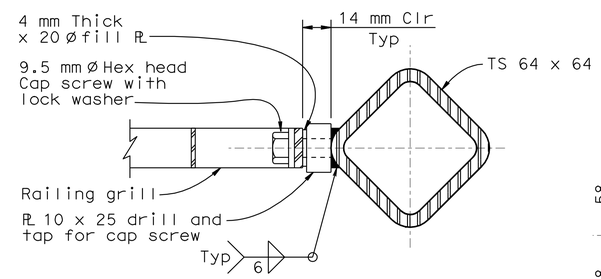

SECTION C2-C2
(Typ below light fixture)
1:1.5

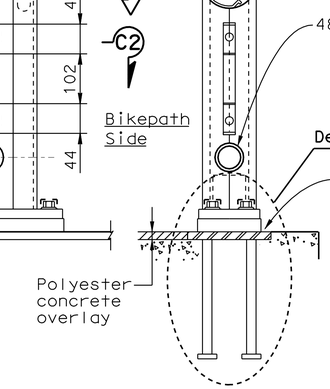

SECTION B-B

7 **REVISED PER ADDENDUM No. 7 DATED OCTOBER 19 2009**

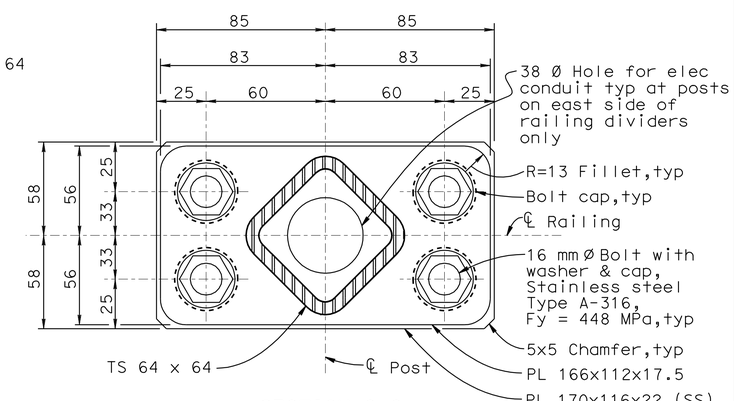

SECTION G-G

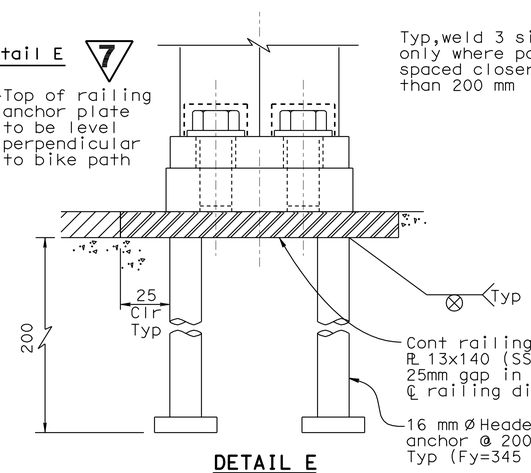

DETAIL E

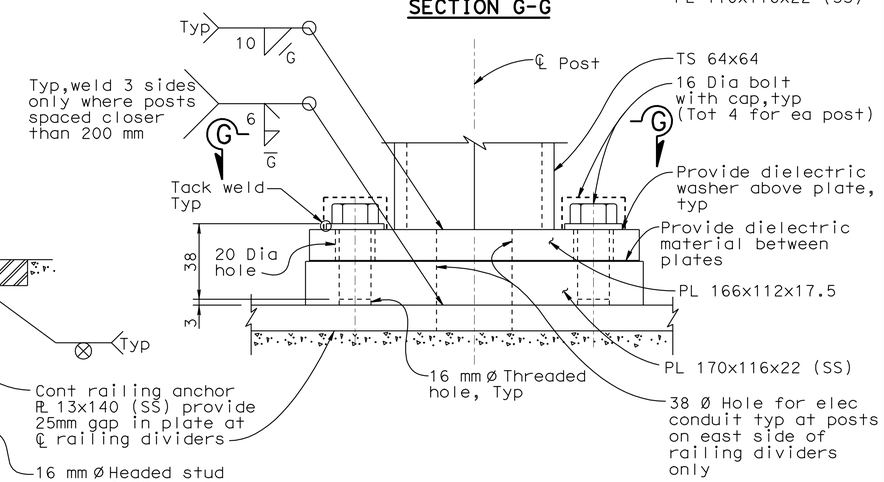

DETAIL F

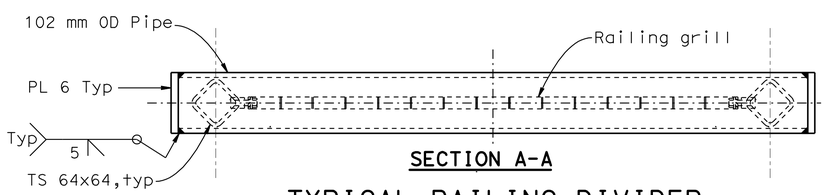

SECTION A-A

TYPICAL RAILING DIVIDER
1:5

TYPICAL POST ANCHORAGE
1:1.5

5 **REVISED PER ADDENDUM No. 5 DATED JULY 30, 2009**

ALL DIMENSIONS ARE IN MILLIMETERS UNLESS OTHERWISE SHOWN

DESIGN OVERSIGHT
JOHN MOOK, BERNARD CHAN, JUAN F. CARPIO
March 3, 2008
SIGN OFF DATE

Rev. Date: 5-18-98

	BY	CHECKED
DESIGN	Shangkuan	Atiqullah
DETAILS	van Ryn/Zucchi/Mai	Jain
QUANTITIES	Liao	E. Nichol

ORIGINAL SCALE IN MILLIMETERS FOR REDUCED PLANS 0 10 20 30 40 50 60 70 80 90 100

PREPARED FOR THE STATE OF CALIFORNIA DEPARTMENT OF TRANSPORTATION

Jal Birdy
PROJECT ENGINEER

BRIDGE NO. 34-0006 L/R
KILOMETER POST 12.8

CU 04251
EA 0120S1

SAN FRANCISCO OAKLAND BAY BRIDGE
EAST SPAN SEISMIC SAFETY PROJECT

YBI TRANSITION STRUCTURES

BIKE PATH RAILING DETAILS NO.2

DISREGARD PRINTS BEARING EARLIER REVISION DATES

REVISION DATES (PRELIMINARY STAGE ONLY): 9/13/07 01/24/08 3/14/08 5/9/08 9/18/08 4/24/09 8/28/09 9/29/09 1/24/07 6/25/07

SHEET 163 OF 209

Sept 29, 2009

USERNAME => trmikest DATE PLOTTED => 15-OCT-2009 TIME PLOTTED => 11:03

FILE => 04-0120s1-34-006rl-u-rbikpdt02.add